State of Iowa

Iowa Administrative Code Supplement

Biweekly
December 13, 2000

KATHLEEN K. BATES
ADMINISTRATIVE CODE EDITOR

STEPHANIE A. HOFF
ASSISTANT EDITOR

PUBLISHED BY THE
STATE OF IOWA
UNDER AUTHORITY OF IOWA CODE SECTION 17A.6

The Iowa Administrative Code Supplement is published biweekly pursuant to Iowa Code section 17A.6. The Supplement contains replacement pages to be inserted in the loose-leaf Iowa Administrative Code (IAC) according to instructions included with each Supplement. The replacement pages incorporate rule changes which have been adopted by the agencies and filed with the Administrative Rules Coordinator as provided in Iowa Code sections 7.17 and 17A.4 to 17A.6. To determine the specific changes in the rules, refer to the Iowa Administrative Bulletin bearing the same publication date.

In addition to the changes adopted by agencies, the replacement pages may reflect objection to a rule or a portion of a rule filed by the Administrative Rules Review Committee (ARRC), the Governor, or the Attorney General pursuant to Iowa Code section 17A.4(4); an effective date delay imposed by the ARRC pursuant to section 17A.4(5) or 17A.8(9); rescission of a rule by the Governor pursuant to section 17A.4(6); or nullification of a rule by the General Assembly pursuant to Article III, section 40, of the Constitution of the State of Iowa.

The Supplement may also contain replacement pages for the IAC Index and for the preliminary sections of the IAC: General Information about the IAC, Chapter 17A of the Code of Iowa, Style and Format of Rules, Table of Rules Implementing Statutes, and Uniform Rules on Agency Procedure.

INSTRUCTIONS

FOR UPDATING THE

IOWA ADMINISTRATIVE CODE

Agency names and numbers in the first column below correspond to the divider tabs in the IAC binders. Obsolete pages of the IAC are listed in the "Remove Old Pages" column. New and replacement pages included in this Supplement are listed in the "Insert New Pages" column. Carefully remove and insert pages as directed.

Editor's telephone: (515)281-3355 or (515)281-8157
Fax: (515)281-4424

UPDATING INSTRUCTIONS

December 13, 2000, Biweekly Supplement

[Previous Supplement dated 11/29/00]

	Remove Old Pages*	**Insert New Pages**
Banking Division[187]	Analysis, p. 1, 2 Ch 2, p. 11—Ch 4, p. 1	Analysis, p. 1, 2 Ch 2, p. 11—Ch 4, p.1
ECONOMIC DEVELOPMENT, IOWA DEPARTMENT OF[261]	Analysis, p. 1—Analysis, p. 4 Ch 20, p. 1, 2 Ch 20, p. 9 Ch 42, p. 1, 2	Analysis, p. 1—Analysis, p. 4 Ch 20, p. 1, 2 Ch 20, p. 9 Ch 42, p. 1, 2
Environmental Protection Commission[567]	Analysis, p. 11, 12 Ch 65, p. 31, 32 (Do not remove p. 32a, 32b) Ch 65, p. 32k Ch 81, p. 1—Ch 82, p. 7	Analysis, p. 11, 12 Ch 65, p. 31, 32 Ch 65, p. 32k Ch 81, p. 1—Ch 82, p. 7
PUBLIC SAFETY DEPARTMENT[661]	Analysis, p. 7, 8 Ch 18, p. 1—Ch 18, p. 4	Analysis, p. 7, 8 Ch 18, p. 1—Ch 18, p. 4
Index Volume	"R" Tab, p. 1-22	"R" Tab, p. 1-22

*These pages may be archived for tracing the history of a rule.

BANKING DIVISION[187]

Created within the Department of Commerce by 1986 Iowa Acts, chapter 1245. Prior to 4/22/87, for Chs 1 to 15 see Banking Department[140] Chs 1 to 4, 8, 9 and 21; for Ch 16 see Auditor of State[130], Ch 1.

Note: Iowa Code chapter 453 renumbered as chapter 12C in 1993 Iowa Code.

CHAPTER 1
DESCRIPTION OF ORGANIZATION

1.1(17A,524) Definitions
1.2(17A,524) Scope and application
1.3(17A,524) Division of banking
1.4(17A,524) Forms and instructions

CHAPTER 2
APPLICATION PROCEDURES

2.1(17A,524) Organization of a state-chartered bank
2.2(17A,524) Conversion of national bank into state bank
2.3(17A,524) Merger or purchase and assumption
2.4(17A,524) Establishment of a bank office
2.5(17A,524) Change of location of principal place of business or bank office
2.6(17A,524) Change of control
2.7(17A,524) Renewal, amendment or restatement of articles of incorporation
2.8 Reserved
2.9(17A) Licensing of a debt management company
2.10 Reserved
2.11(17A) Securing permission from the superintendent to engage in the business of selling certain instruments for the payment of money
2.12(17A,524) Supplemental application procedures
2.13(524) Integral facility determination
2.14(524) Investment in a bank service corporation or other subsidiary
2.15(524) Securities activities
2.16(524) Contracts

CHAPTER 3
EXAMINATIONS

3.1(524) Satisfaction of examination requirements

CHAPTER 4
STATE BANKING BOARD

4.1(524) Composition of board
4.2(524) Term of office
4.3(524) Function of the board
4.4(524) Meetings and method of contacting members of the board
4.5(524) Board policy relating to reconsideration of certain applications which have been previously denied by the superintendent of banking

CHAPTER 5
PETITIONS FOR RULE MAKING

5.1(17A) Petition for rule making
5.2(17A) Briefs
5.3(17A) Inquiries
5.4(17A) Division consideration

CHAPTER 6
DECLARATORY ORDERS

6.1(17A) Petition for declaratory order
6.2(17A) Notice of petition
6.3(17A) Intervention
6.4(17A) Briefs
6.5(17A) Inquiries
6.6(17A) Service and filing of petitions and other papers
6.7(17A) Consideration
6.8(17A) Action on petition
6.9(17A) Refusal to issue order
6.10(17A) Contents of declaratory order—effective date
6.11(17A) Copies of orders
6.12(17A) Effect of a declaratory order

CHAPTER 7
PUBLIC RECORDS AND FAIR INFORMATION PRACTICES
(Uniform Rules)

7.1(17A,22) Definitions
7.3(17A,22) Requests for access to records
7.9(17A,22) Disclosures without the consent of the subject
7.10(17A,22) Routine use
7.11(17A,22) Consensual disclosure of confidential records
7.12(17A,22) Release to subject
7.13(17A,22) Availability of records
7.14(17A,22) Personally identifiable information
7.15(17A,22) Other groups of records routinely available for public inspection
7.16(17A,22) Applicability

CHAPTER 8
GENERAL BANKING POWERS

8.1 to 8.7 Reserved
8.8(12B) Approved rating services
8.9(524) General definition of bank

CHAPTER 9
INVESTMENT AND LENDING POWERS

9.1 Reserved
9.2(17A,524) Real estate lending
9.3(17A,524) Leasing

CHAPTER 10
ELECTRONIC TRANSFER OF FUNDS

10.1(527) Scope
10.2(527) Terms defined
10.3(527) Applications to operate a central routing unit
10.4(527) Compliance examinations of a central routing unit
10.5(527) Applications to establish a satellite terminal
10.6(527) Advertising at satellite terminals

CHAPTER 11
CONTESTED CASES

11.1(17A) Scope and applicability
11.2(17A) Definitions
11.3(17A) Time requirements
11.4(17A) Requests for contested case proceeding
11.5(17A) Notice of hearing
11.6(17A) Presiding officer
11.7(17A) Waiver of procedures
11.8(17A) Telephone proceedings
11.9(17A) Disqualification
11.10(17A) Consolidation—severance
11.11(17A) Pleadings
11.12(17A) Service and filing of pleadings and other papers
11.13(17A) Discovery
11.14(17A) Subpoenas
11.15(17A) Motions
11.16(17A) Prehearing conference
11.17(17A) Continuances
11.18(17A) Withdrawals
11.19(17A) Intervention
11.20(17A) Hearing procedures
11.21(17A) Evidence
11.22(17A) Default
11.23(17A) Ex parte communication
11.24(17A) Recording costs
11.25(17A) Interlocutory appeals
11.26(17A) Final decision
11.27(17A) Appeals and review
11.28(17A) Applications for rehearing
11.29(17A) Stays of division actions
11.30(17A) No factual dispute contested cases
11.31(17A) Emergency adjudicative proceedings

CHAPTERS 12 to 14
Reserved

CHAPTER 15
REGULATED LOANS

15.1(536) Application
15.2(536) Suspension, revocation or surrender of license
15.3(536) Records
15.4(536) Miscellaneous restrictions
15.5(536) Interest rate

CHAPTER 16
INDUSTRIAL LOANS

16.1(536A) Licenses
16.2(536A) Other business in same office
16.3(536A) Multiple business authorization
16.4(536A) Multiple business revocation
16.5(536A) Examination of books
16.6(536A) Records
16.7(536A) Record retention
16.8(536A) Loan conversion
16.9(536A) Mail loans
16.10(536A) Real estate loan reporting and disclosure
16.11(536A) Thrift certificates
16.12(536A) Real estate loans

2.16(2) *Application.* An application by a state bank to engage in futures contracts, forward contracts and standby contracts shall be in letter form and shall, at a minimum, contain the following information.

a. A description of the type(s) of contracts the state bank proposes to purchase and sell.

b. A copy of the board of directors' resolution authorizing the specific type(s) of contracts proposed to be purchased and sold.

c. A copy of the policy adopted by the state bank's board of directors which shall include specific policy objectives that outline permissible contract strategies and their relationship to overall investment activities and asset-liability management; the names, responsibilities, and authority limits of the personnel authorized to engage in futures, forward and standby contracts; limitations applicable to futures, forward and standby contract positions; the personnel to be used to review at least monthly the bank's contract positions to ascertain compliance with such limits; the exchanges and firms through which authorized personnel may conduct futures, forward and standby contracts; and the dollar limit on transactions with each firm.

d. A representation that the state bank has sufficient managerial resources to engage in futures, forward and standby contracts.

e. A copy of the board of directors' resolution stating that the board members have read and understood the "Federal Deposit Insurance Corporation Statement of Policy Concerning Interest Rate Futures Contracts, Forward Contracts, and Standby Contracts" and will comply with the policy statement.

2.16(3) *Investigation.* The superintendent may conduct an investigation as deemed necessary.

2.16(4) *Decision.* The superintendent shall approve or deny the application within 60 days after the application is accepted for processing. The decision by the superintendent shall be conveyed in writing to the applicant.

2.16(5) *Revocation.* The superintendent may revoke the approval of the state bank to engage in futures, forward and standby contracts, pursuant to the contested case provisions of Iowa Code chapter 17A, if any of the following occur.

a. The financial condition of the state bank has significantly deteriorated.

b. The superintendent determines the futures, forward or standby contract activities are being conducted unlawfully or in an unsafe or unsound manner.

c. Other relevant factors occur which the superintendent may determine are grounds for a revocation of the activities.

This rule is intended to implement Iowa Code section 524.901.

[Filed July 1, 1975]
[Filed emergency 6/10/77—published 6/29/77, effective 6/10/77]
[Filed 9/1/77, Notice 6/29/77—published 9/21/77, effective 10/26/77 and 11/1/77]
[Filed 3/16/79, Notice 2/7/79—published 4/4/79, effective 5/9/79]
[Filed 4/1/87, Notice 2/25/87—published 4/22/87, effective 5/28/87]
[Filed 1/21/88, Notice 11/18/87—published 2/10/88, effective 3/16/88]
[Filed 10/10/90, Notice 9/5/90—published 10/31/90, effective 1/1/91]
[Filed 5/24/91, Notice 4/3/91—published 6/12/91, effective 7/17/91]
[Filed 12/17/91, Notice 11/13/91—published 1/8/92, effective 2/12/92]
[Filed 8/14/92, Notice 5/27/92—published 9/2/92, effective 10/7/92]
[Filed 1/29/93, Notice 12/23/92—published 2/17/93, effective 3/24/93]
[Filed 4/8/93, Notice 3/3/93—published 4/28/93, effective 6/2/93]
[Filed 9/17/96, Notice 7/17/96—published 10/9/96, 11/13/96]

CHAPTER 3
EXAMINATIONS

187—3.1(524) Satisfaction of examination requirements. The requirement for an examination of state-chartered banks at least once during each two-year period set forth in Iowa Code section 524.217(1)*"a"* may be satisfied by an examination conducted by the banking division, the Federal Deposit Insurance Corporation, or the Federal Reserve System when such examinations address the statutory requirements of Iowa Code section 524.217(1)*"a."*

This rule is intended to implement Iowa Code section 524.217.

[Filed 11/22/00, Notice 10/18/00—published 12/13/00, effective 1/17/01]

CHAPTER 4
STATE BANKING BOARD
[Prior to 4/22/87, see Banking Department[140] Ch 4]

187—4.1(524) Composition of board. The state banking board is a statutory board composed of the superintendent, who is an ex officio nonvoting member and chairperson and six other members. All members of the board are appointed by the governor.

187—4.2(524) Term of office. Each member of the board is appointed for a term of four years which is contemporaneous with the regular term of office of the superintendent. In case of a vacancy in the board, other than a vacancy in the office of the superintendent, a new member is appointed to fill such vacancy for the unexpired term.

187—4.3(524)* Function of the board. The state banking board acts in an advisory capacity concerning all matters that may come before it unless specific statutory authority is given for the board to act in a capacity other than advisory.

187—4.4(524) Meetings and method of contacting members of the board. The state banking board generally meets in the office of the superintendent on the third Wednesday of each month. Such meetings will be adjourned for lack of a quorum unless at least four of the six members are present at the start of each meeting. The superintendent's office is located at 200 East Grand Avenue, Suite 300, Des Moines, Iowa 50309-1827. Anyone wishing to contact members of the board at other times may obtain the address and telephone number for each member by calling or writing to the superintendent.

187—4.5(524) Board policy relating to reconsideration of certain applications which have been previously denied by the superintendent. Applications which have been denied by the superintendent involving requests to organize new state-chartered banks, requests to establish bank offices, requests to merge one or more banks, requests for voluntary dissolution, or requests to change the location of a bank's principal place of business from one city to another may be resubmitted to the board for reconsideration within 180 days after the date of denial if the previously denied applicant can provide information showing significant positive changes in the factors originally considered by the board at the time of their last recommendation to the superintendent.

This rule is intended to implement Iowa Code section 17A.3.

[Filed 11/22/77, Notice 5/4/77—published 12/14/77, effective 1/18/78]
[Filed 1/31/78, Notice 12/14/77—published 2/22/78, effective 3/30/78]
[Filed 4/1/87, Notice 2/25/87—published 4/22/87, effective 5/28/87]
[Filed 9/17/96, Notice 7/17/96—published 10/9/96, effective 11/13/96]

*Objection, see filed rule published IAC Supp. 12/14/77, 1/25/78.

ECONOMIC DEVELOPMENT, IOWA DEPARTMENT OF[261]

[Created by 1986 Iowa Acts, chapter 1245]
[Prior to 1/14/87, see Iowa Development Commission[520] and Planning and Programming[630]]

PART I
DEPARTMENT STRUCTURE AND PROCEDURES

CHAPTER 1
ORGANIZATION
1.1(15) Mission
1.2(15) Definitions
1.3(15) Department of economic development board
1.4(15) Department structure
1.5(15) Information

CHAPTERS 2 and 3
Reserved

PART II
WORKFORCE DEVELOPMENT COORDINATION

CHAPTER 4
WORKFORCE DEVELOPMENT ACCOUNTABILITY SYSTEM
4.1(15) Purpose
4.2(15) Compilation of information

CHAPTER 5
IOWA INDUSTRIAL NEW JOBS TRAINING PROGRAM
5.1(15,260E) Authority
5.2(15,260E) Purpose
5.3(15,260E) Definitions
5.4(15,260E) Agreements
5.5(15,260E) Resolution on incremental property tax
5.6(15,260E) New jobs withholding credit
5.7(15,260E) Notice of intent to issue certificates
5.8(15,260E) Standby property tax levy
5.9(15,260E) Reporting
5.10(15,260E) Monitoring
5.11(15,260E) State administration
5.12(15,260E) Coordination with communities
5.13(15,76GA,SF2351) Supplemental 1½ percent withholding

CHAPTER 6
Reserved

CHAPTER 7
IOWA JOBS TRAINING PROGRAM
7.1(260F) Authority
7.2(260F) Purpose
7.3(260F) Definitions
7.4(260F) Program funding
7.5(260F) Funding for projects which include one business
7.6(260F) Funding for projects which include multiple businesses
7.7(260F) Funding for high technology apprenticeship programs
7.8(260F) Matching funds requirement
7.9(260F) Use of program funds
7.10(260F) Use of 260F earned interest
7.11(260F) Application fee
7.12(260F) Separate account
7.13(260F) Eligible business
7.14(260F) Ineligible business
7.15(260F) Eligible employee
7.16(260F) Ineligible employee
7.17(260F) Agreement of intent
7.18(260F) Project commencement date
7.19(260F) Application process
7.20(260F) Application scoring criteria
7.21(260F) Training contract
7.22(260F) Special requirements for community college consortium projects
7.23(260F) Special requirements for community college-sponsored business network projects
7.24(260F) Special requirements for department-sponsored business network projects
7.25(260F) Special requirements for community college-sponsored high technology apprenticeship projects
7.26(260F) Special requirements for department-sponsored high technology apprenticeship projects
7.27(260F) Events of default
7.28(260F) Options and procedures on default
7.29(260F) Remedies upon default
7.30(260F) Return of unused funds
7.31(260F) Open records
7.32(260F) Required forms

CHAPTER 8
WORKFORCE DEVELOPMENT FUND
8.1(15,76GA,ch1180) Purpose
8.2(15,76GA,ch1180) Definitions
8.3(15,76GA,ch1180) Workforce development fund account

8.4(15,76GA,ch1180)
Workforce development fund allocation
8.5(15,76GA,ch1180)
Workforce development fund reporting
8.6(15,76GA,ch1180)
Training and retraining programs for targeted industries
8.7(15,76GA,ch1180)
Projects under Iowa Code chapter 260F
8.8(15,76GA,chs1180,1219)
Apprenticeship programs under Iowa Code section 260C.44 (including new or statewide building trades apprenticeship programs)
8.9(15,76GA,chs1180,1219)
Innovative skill development activities
8.10(15,76GA,ch1180)
Negotiation and award
8.11(15,76GA,ch1180)
Administration
8.12(15,76GA,ch1180)
Training materials and equipment
8.13(15,76GA,ch1180)
Redistribution of funds

CHAPTERS 9 and 10
Reserved

CHAPTER 11
CERTIFIED SCHOOL TO CAREER PROGRAM
11.1(15) Purpose
11.2(15) Definitions
11.3(15) Certified program work site agreement
11.4(15) Payroll expenditure refund

CHAPTERS 12 to 16
Reserved

CHAPTER 17
HIGH TECHNOLOGY APPRENTICESHIP PROGRAM
17.1(76GA,HF512) Purpose
17.2(76GA,HF512) Definitions
17.3(76GA,HF512) Fund distribution process
17.4(76GA,HF512) Monitoring

CHAPTERS 18 and 19
Reserved

CHAPTER 20
ACCELERATED CAREER EDUCATION (ACE) PROGRAM
DIVISION I
GENERAL PROVISIONS
20.1(260G) Purpose
20.2(260G) Definitions
20.3(260G) ACE program eligibility and designation
20.4(260G) Funding allocation
20.5(260G) Eligible and ineligible business
20.6(260G) Program agreements
20.7(260G) Administration
20.8(260G) Customer tracking system
20.9(260G) Program costs recalculation
DIVISION II
CAPITAL COSTS COMPONENT
20.10(260G) Threshold requirements
20.11(260G) Application procedures
20.12(260G) Evaluation criteria for competitive awards—capital costs projects
DIVISION III
PROGRAM JOB CREDITS
20.13(260G) Threshold requirements—program job credits
20.14(260G) Job credits allocation
20.15(260G) Determination of job credits, notice, and certification
20.16(260G) Evaluation criteria for quality assurance—program job credits
20.17(260G) Committed funds
DIVISION IV
ACCELERATED CAREER EDUCATION GRANTS COMPONENT
20.18(260G) ACE program serving demand occupations

PART III
DIVISION OF COMMUNITY AND RURAL DEVELOPMENT

CHAPTER 21
DIVISION RESPONSIBILITIES
21.1(15) Purpose
21.2(15) Structure

CHAPTER 22
Reserved

CHAPTER 23
IOWA COMMUNITY DEVELOPMENT BLOCK GRANT PROGRAM
23.1(15) Purpose
23.2(15) Definitions
23.3(15) Eligible applicants
23.4(15) Allocation of funds
23.5(15) Common requirements for funding
23.6(15) Requirements for the competitive program
23.7(15) Requirements for the economic development set-aside fund
23.8(15) Requirements for the public facilities set-aside fund
23.9(15) Requirements for the career link program
23.10(15) Requirements for the contingency fund

23.11(15) Requirements for the housing fund program
23.12(15) Interim financing program
23.13(15) Flood recovery fund
23.14(15) Disaster recovery fund
23.15(15) Administration of a CDBG award

CHAPTER 24
EMERGENCY SHELTER GRANTS PROGRAM
24.1(PL100-628) Purpose
24.2(PL100-628) Definitions
24.3(PL100-628) Eligible applicants
24.4(PL100-628) Eligible activities
24.5(PL100-628) Ineligible activities
24.6(PL100-628) Application procedures
24.7(PL100-628) Application review process
24.8(PL100-628) Matching requirement
24.9(PL100-628) Grant awards
24.10(PL100-628) Restrictions placed on grantees
24.11(PL100-628) Compliance with applicable federal and state laws and regulations
24.12(PL100-628) Administration

CHAPTER 25
HOUSING FUND
25.1(15) Purpose
25.2(15) Definitions
25.3(15) Eligible applicants
25.4(15) Eligible activities and forms of assistance
25.5(15) Application procedure
25.6(15) Minimum application requirements
25.7(15) Application review criteria
25.8(15) Allocation of funds
25.9(15) Administration of awards
25.10(15) Requirements for the contingency fund

CHAPTER 26
VARIANCE PROCEDURES FOR TAX INCREMENT FINANCING (TIF) HOUSING PROJECTS
26.1(403) Goals and objectives
26.2(403) Definitions
26.3(403) Requirements for benefit to low- and moderate-income families
26.4(403) Ability to request a variance
26.5(403) Variance request procedure
26.6(403) Criteria for review

CHAPTER 27
Reserved

CHAPTER 28
LOCAL HOUSING ASSISTANCE PROGRAM
28.1(77GA,HF732) Purpose
28.2(77GA,HF732) Definitions
28.3(77GA,HF732) Eligible applicants
28.4(77GA,HF732) Eligible activities and forms of assistance
28.5(77GA,HF732) Application procedure
28.6(77GA,HF732) Minimum application requirements
28.7(77GA,HF732) Application review criteria
28.8(77GA,HF732) Allocation of funds
28.9(77GA,HF732) Administration of awards

CHAPTER 29
HOMELESS SHELTER OPERATION GRANTS PROGRAM
29.1(77GA,ch1225) Purpose
29.2(77GA,ch1225) Definitions
29.3(77GA,ch1225) Eligible applicants
29.4(77GA,ch1225) Eligible activities
29.5(77GA,ch1225) Ineligible activities
29.6(77GA,ch1225) Application procedures
29.7(77GA,ch1225) Application review process
29.8(77GA,ch1225) Matching requirement
29.9(77GA,ch1225) Grant awards
29.10(77GA,ch1225) Compliance with applicable federal and state laws and regulations
29.11(77GA,ch1225) Administration

CHAPTER 30
JOB OPPORTUNITIES FOR PERSONS WITH DISABILITIES PROGRAM
30.1(76GA,SF2470) Purpose
30.2(76GA,SF2470) Definitions
30.3(76GA,SF2470) Eligible applicant
30.4(76GA,SF2470) Project awards
30.5(76GA,SF2470) Eligible and ineligible use of grant funds
30.6(76GA,SF2470) General guidelines for applications
30.7(76GA,SF2470) Review and award process
30.8(76GA,SF2470) Program management

CHAPTERS 31 to 36
Reserved

CHAPTER 37
CITY DEVELOPMENT BOARD
37.1(368) Expenses, annual report and rules
37.2(17A) Forms

CHAPTER 38
IOWA INTERGOVERNMENTAL REVIEW SYSTEM
38.1(7A) Purpose
38.2(7A) Definitions
38.3(7A) Activities of the state clearinghouse
38.4(7A) Areawide clearinghouses
38.5(7A,28E,473A) Designation
38.6(7A) Review procedures—federal financial assistance
38.7(7A) Housing programs
38.8(7A) Direct development
38.9(7A) Board of regents
38.10(7A) Internal process
38.11(7A,68A) Information

CHAPTER 39
IOWA MAIN STREET PROGRAM
39.1(75GA,ch1201) Purpose
39.2(75GA,ch1201) Definitions
39.3(75GA,ch1201) Program administration
39.4(75GA,ch1201) Eligible applicants
39.5(75GA,ch1201) Funding
39.6(75GA,ch1201) Selection
39.7(75GA,ch1201) Selection criteria
39.8(75GA,ch1201) Financial management
39.9(75GA,ch1201) Performance reviews
39.10(75GA,ch1201) Noncompliance
39.11(75GA,ch1201) Forms

CHAPTER 40
Reserved

CHAPTER 41
RURAL/COMMUNITY PLANNING AND DEVELOPMENT FUND
41.1(78GA,HF745) Purpose
41.2(78GA,HF745) Program eligibility
41.3(78GA,HF745) General policies for applications
41.4(78GA,HF745) Application procedures
41.5(78GA,HF745) Application contents
41.6(78GA,HF745) Review process
41.7(78GA,HF745) Award process
41.8(78GA,HF745) Program management
41.9(15) Performance reviews

CHAPTER 42
RURAL RESOURCE COORDINATION PROGRAMS FOR FIRE SERVICES
42.1(78GA,chs1225,1230) Purpose
42.2(78GA,chs1225,1230) Program eligibility
42.3(78GA,chs1225,1230) Award limits
42.4(78GA,chs1225,1230) Eligible uses of funds
42.5(78GA,chs1225,1230) Application procedures
42.6(78GA,chs1225,1230) Application review
42.7(78GA,chs1225,1230) Disbursement of funds

CHAPTER 43
MAIN STREET LINKED INVESTMENTS LOAN PROGRAM
43.1(12) Purpose
43.2(12) Definitions
43.3(12) Eligibility
43.4(12) Main street linked investments design review committee
43.5(12) Main street linked investments design review board
43.6(12) Procedure

CHAPTER 44
COG ASSISTANCE
44.1(99E) Purpose
44.2(99E) Definitions
44.3(99E) Eligibility
44.4(99E) Eligible activities
44.5(99E) Application procedure
44.6(99E) Grant awards
44.7(99E) Funding
44.8(99E) Financial management standards
44.9(99E) Record keeping and retention
44.10(99E) Progress reports
44.11(99E) Noncompliance
44.12(99E) Grant closeouts
44.13(99E) Compliance with state laws and regulations

CHAPTER 45
HOUSING ASSESSMENT AND ACTION PLANNING PROGRAM
45.1(76GA,HF512) Purpose
45.2(76GA,HF512) Eligible applicants
45.3(76GA,HF512) Population guidelines
45.4(76GA,HF512) Definitions
45.5(76GA,HF512) Project awards

CHAPTER 20
ACCELERATED CAREER EDUCATION (ACE) PROGRAM

DIVISION I - GENERAL PROVISIONS

261—20.1(260G) Purpose. The ACE program has three parts: the capital costs component, the program job credits component, and the accelerated career education grants program. The Iowa department of economic development administers the first two components. The college student aid commission administers the career education grants portion of the ACE program as described in the commission's administrative rules. The goal of the ACE program is to provide an enhanced skilled workforce in Iowa.

261—20.2(260G) Definitions.

"Accelerated career education program" or *"ACE"* means the program established pursuant to Iowa Code Supplement chapter 260G as amended by 2000 Iowa Acts, chapter 1196.

"Agreement" means a program agreement referred to in Iowa Code Supplement section 260G.3 as amended by 2000 Iowa Acts, chapter 1196, between an employer and a community college.

"Allotment" means the distribution of job credits based upon need as determined by the community colleges.

"Community college" means a community college established under Iowa Code chapter 260C or a consortium of two or more community colleges.

"Employee" means a person employed in a program job.

"Employer" means a business or consortium of businesses engaged in interstate or intrastate commerce for the purposes of manufacturing, processing or assembling products; construction; conducting research and development; or providing services in interstate or intrastate commerce, but excluding retail services.

"Highly skilled job" means a job with a broadly based, high-performance skill profile including advanced computation and communication skills, technology skills and workplace behavior skills, and for which an applied technical education is required.

"IDED" or *"department"* means the Iowa department of economic development.

"IDED board" means the Iowa economic development board authorized under Iowa Code section 15.103.

"Participant" means an individual who is enrolled in an accelerated career education program at a community college.

"Participant position" means the individual student enrollment position available in an accelerated career education program.

"Program capital cost" means classroom and laboratory renovation, new classroom and laboratory construction, site acquisition or preparation.

"Program job" means a highly skilled job available from an employer pursuant to a program agreement.

"Program job credit" means a credit that an employer may claim against all withholding taxes due in an amount up to 10 percent of the gross program job wage of a program job position as authorized in an agreement between a community college and an employer.

"Program job position" means a job position which is planned or available for an employee by the employer pursuant to a program agreement.

"Program operating costs" means all necessary and incidental costs of providing program services.

"Program services" means services that include all of the following provided they are pursuant to a program agreement: program needs assessment and development, job task analysis, curriculum development and revision, instruction, instructional materials and supplies, computer software and upgrades, instructional support, administrative and student services, related school to career training programs, skill or career interest assessment services and testing and contracted services.

"Vertical infrastructure" means land acquisition and construction, major renovation and major repair of buildings, all appurtenant structures, utilities, site development and recreation trails. Vertical infrastructure does not include equipment; routine, recurring maintenance or operational expenses; or leasing of a building, appurtenant structure, or utility without a lease-purchase agreement.

261—20.3(260G) ACE program eligibility and designation.

20.3(1) In order to receive financial assistance under the capital projects program, tax credits from withholding under the program job credits component or financial assistance through the college student aid commission's accelerated career education grants program, a program must be designated by a community college as an eligible ACE program. All programs must demonstrate increased capacity to enroll additional students. To be eligible, a program must be either:

a. A credit career, vocational, or technical education program resulting in the conferring of a certificate, diploma, associate of science degree, or associate of applied science degree; or

b. A credit-equivalent career, vocational, or technical education program consisting of not less than 540 contact hours of classroom and laboratory instruction and resulting in the conferring of a certificate or other recognized, competency-based credential.

20.3(2) By resolution of a community college board of directors, an eligible program may be approved and designated as an ACE program. The respective community college board(s) of directors shall ensure compliance with Iowa Code Supplement chapter 260G as amended by 2000 Iowa Acts, chapter 1196, and 2000 Iowa Acts, chapter 1225. In designating ACE programs, the respective community college board(s) shall give priority to targeted industries as designated by the department.

20.3(3) A copy of the designated ACE program agreement shall be submitted to the department. The agreement shall state which of the three program components (capital projects, tax credits or education grants), or combination thereof, is included in the agreement. The department will maintain a record of all approved ACE programs.

20.3(4) The department will review ACE programs for issues of quality in accordance with rule 261—20.16(260G).

261—20.4(260G) Funding allocation.

20.4(1) *Base allocation.*

a. Funds for ACE program job credits and capital costs projects shall be allocated among the community colleges in the state for the fiscal years and in the amounts specified in 2000 Iowa Acts, chapters 1196 and 1225, and these rules.

b. Community colleges shall submit program agreements to access allotted funds. The program agreement shall document the findings of the community college that all ACE eligibility requirements have been met.

20.4(2) *Alternate allotment.* If a community college fails to commit any of its allotment by April 1 of the fiscal year, the funds for that community college will be allocated to other community colleges based upon need as described in these rules. Program job credits are considered to be committed if there is a signed program agreement in place or if there is a statement of intent in place that states that a signed program agreement will be in place by May 1 of the fiscal year.

261—20.17(260G) Committed funds. The department shall maintain an annual record of the proposed program job credits under each agreement for each cycle of each fiscal year. When the total available program job credits have been allocated for a fiscal year, the department shall inform all community colleges that the maximum amount has been allocated and that further program job credits will not be available for the remainder of the fiscal year. If any committed credits become uncommitted after the above-mentioned notice has been issued, the department will inform all community colleges that some job credits are again available and applications will be accepted for those job credits until they are again committed.

DIVISION IV - ACCELERATED CAREER EDUCATION GRANTS COMPONENT

261—20.18(260G) ACE program serving demand occupations. The college student aid commission administers the career education grants portion of the ACE program. The department will report to the college student aid commission those ACE programs which service demand occupations within targeted industries as designated by the department in consultation with the department of workforce development.

These rules are intended to implement Iowa Code Supplement chapter 260G as amended by 2000 Iowa Acts, chapter 1196, and 2000 Iowa Acts, chapter 1225.

[Filed emergency 6/18/99—published 7/14/99, effective 6/18/99]
[Filed 8/20/99, Notice 7/14/99—published 9/8/99, effective 10/13/99]
[Filed emergency 7/20/00—published 8/9/00, effective 7/21/00]
[Filed emergency 8/18/00—published 9/6/00, effective 8/18/00]
[Filed emergency 10/23/00 after Notice 9/6/00—published 11/15/00, effective 10/23/00]
[Filed emergency 11/17/00—published 12/13/00, effective 11/17/00]

CHAPTER 42
RURAL RESOURCE COORDINATION PROGRAMS FOR FIRE SERVICES

261—42.1(78GA,chs1225,1230) Purpose. This chapter includes provisions for two programs: Response 2020 and dry hydrant grant program. The purpose of Response 2020 is to assist fire and emergency response departments in the planning, assessment and evaluation of local emergency response services and to support systems to improve service delivery though financial and technical assistance. During fiscal year 2001, up to $200,000 of funding is available to support rural dry hydrant demonstration projects across the state.

261—42.2(78GA,chs1225,1230) Program eligibility. Cities, counties, and councils of government may apply on behalf of fire and emergency response departments for these funds. Resource conservation and development councils may apply for dry hydrant funds only. Requests for funding under the dry hydrant program must be made by a consortium of fire departments in order to be considered.

261—42.3(78GA,chs1225,1230) Award limits.

42.3(1) For Response 2020 projects, the maximum grant award shall not exceed $15,000 over a period not to exceed one year.

42.3(2) For the dry hydrant grant program, the maximum grant award shall be $15,000 per each applicant region. A maximum of $2,500 per dry hydrant may be requested.

a. The award amount for dry hydrant projects shall be used for the following activities including, but not limited to: approved training and education in site selection, hydrant location and water acquisition; and the proper use, installation and maintenance of the hydrants.

b. Fire departments requesting funding must obtain a certification of training in dry hydrants from the State of Iowa Community Fire Service Institute or another approved training entity. The review committee established in rule 42.6(78GA,chs1225,1230) must approve any training entity other than the State of Iowa Community Fire Service Institute proposed for use under this program.

42.3(3) All applicants must provide documentation of 25 percent local match for the project. Match may be cash, in-kind services or a combination of the two.

261—42.4(78GA,chs1225,1230) Eligible uses of funds.

42.4(1) Eligible uses of funds for the Response 2020 program include, but are not limited to:

a. Procurement of consultants to assist in planning and assessment.

b. Payment for the costs associated with technical assistance.

c. Purchase of materials necessary to complete an eligible project.

42.4(2) Dry hydrant grant program. Eligible uses of funds for the dry hydrant grant program include: purchase of dry hydrant equipment, installation, training and education on the use of dry hydrants.

261—42.5(78GA,chs1225,1230) Application procedures. Applications will be requested at least annually on a date to be determined by the Iowa department of economic development based on availability of funds. Applications must be submitted on forms prescribed by and available from the Iowa department of economic development. Forms may be obtained by contacting the Iowa Department of Economic Development, Division of Community and Rural Development, 200 East Grand, Des Moines, Iowa 50309, or by calling (515)242-4711.

42.5(1) Application contents shall include, but are not limited to: summary of project, description of geographic area served, information about each service included in the project area, financial information (such as organization budget, tax levies, volunteer staff, and paid personnel).

42.5(2) Application materials must be postmarked by midnight on the established due date. No faxed materials will be accepted.

261—42.6(78GA,chs1225,1230) Application review. Applications will be reviewed by a team of no fewer than five members selected from the following organizations: Iowa department of economic development, Iowa Fireman's Association, state fire marshal, Iowa Fire Chiefs Association, Iowa State University Extension, Iowa League of Cities, Iowa Association of Counties, Institute of Public Affairs—University of Iowa, Iowa department of public health.

42.6(1) *Scoring criteria for proposals.* Applications will be ranked on the following criteria:

a. Demonstrated need in a given area. Identify proposed service area and show that the area is serviceable by the departments in the area - 125 points possible.

b. Evidence of cooperation and collaboration among neighboring departments - 125 points possible.

c. Evidence of local financial and volunteer commitment to the project - 50 points possible.

d. Evidence of capacity of applicant to implement any resulting action plan - 100 points possible.

e. Completeness of application with all necessary attachments included - 50 points possible.

42.6(2) *Additional information needed for dry hydrant grant program.* Before an application under the dry hydrant grant program will be reviewed and scored using the criteria in subrule 42.6(1), the following threshold requirements shall be met:

a. Identification of proposed service area and evidence that it is serviceable by applicant organizations.

b. Evidence of availability of suitable, accessible water source in proposed project area.

c. Demonstrated cooperation and participation among applicant departments and other affected entities within the project area.

261—42.7(78GA,chs1225,1230) Disbursement of funds. Upon the execution of a contract between the award recipient and the Iowa department of economic development, 50 percent of the funds may be paid in advance of completed work activities subject to approval by the department of revenue and finance. Remaining funds for the dry hydrant portion of the program will be paid by the Iowa department of economic development upon receipt of the following: certification of training, proof of installation, and submission of a work plan to maintain the dry hydrants. Remaining funds for the Response 2020 portion of the program will be paid by the Iowa department of economic development upon completion of the project.

These rules are intended to implement Iowa Code section 15.108(3) and 2000 Iowa Acts, chapter 1225, section 4, subsection 3, and 2000 Iowa Acts, chapter 1230, section 1, subsection 3, paragraph "*c.*"

[Filed 9/25/00, Notice 8/9/00—published 10/18/00, effective 11/22/00]
[Filed emergency 11/17/00—published 12/13/00, effective 11/17/00]

CHAPTER 76
FEDERAL WATER RESOURCE PROJECTS
76.1(455B) Referral of federal project
76.2(455B) Solicitation of comments
76.3(455B) Hearing
76.4(455B) Formulation of comments
76.5(455B) Transmittal of comments
76.6(455B) Other coordination

CHAPTERS 77 to 79
Reserved

TITLE VI

CERTIFICATION OF OPERATORS

CHAPTER 80
Reserved

CHAPTER 81
OPERATOR CERTIFICATION: PUBLIC WATER SUPPLY SYSTEMS AND WASTEWATER TREATMENT SYSTEMS
81.1(455B) Definitions
81.2(455B) General
81.3(455B) Wastewater treatment plant grades
81.4(455B) Water treatment plant grades
81.5(455B) Water distribution system grades
81.6(455B) Grade A classification
81.7(455B) Operator education and experience qualifications
81.8(455B) Certification and examination fees
81.9(455B) Examinations
81.10(455B) Certification by examination
81.11(455B) Certification by reciprocity
81.12(455B) Restricted and temporary certification
81.13(455B) Certification renewal
81.14(455B,272C) Continuing education
81.15(455B) Upgrading of certificates
81.16(455B) Operator by affidavit
81.17(455B,272C) Disciplinary actions

CHAPTER 82
WELL CONTRACTOR CERTIFICATION
82.1(455B) Definitions
82.2(455B) General
82.3(455B) Classification of well contractors
82.4 and 82.5 Reserved
82.6(455B) Experience requirements
82.7(455B) Fees
82.8(455B) Examinations
82.9(455B) Certification
82.10(455B) Renewals
82.11 Reserved
82.12(455B) Certified well contractor obligations
82.13(455B) Discipline of certified well contractors
82.14(455B,272C) Revocation of certificates

CHAPTER 83
LABORATORY CERTIFICATION
PART A
GENERAL
83.1(455B) Authority, purpose, and applicability
83.2(455B) Definitions
PART B
CERTIFICATION PROCESS
83.3(455B) Application for laboratory certification
83.4 Reserved
83.5(455B) Procedures for certification of new laboratories or changes in certification
83.6(455B) Laboratory recertification
83.7(455B) Criteria and procedure for provisional, suspended, and revoked laboratory certification

CHAPTERS 84 to 89
Reserved

TITLE VII

SEWAGE WORKS CONSTRUCTION GRANTS

CHAPTER 90
SCOPE OF TITLE—DEFINITIONS—FORMS—RULES OF PRACTICE
90.1(455B,17A) Scope of title
90.2 Reserved
90.3(455B,17A) Forms

CHAPTER 91
CRITERIA FOR AWARD OF GRANTS

91.1(455B) Financial assistance
91.2(455B) Priority system general information
91.3(455B) Public participation procedures
91.4(455B) Definition of terms
91.5(455B) State project priority list management
91.6(455B) Grant funding policy
91.7(455B) Reserve fund administration
91.8(455B) Project administration
91.9(455B) State project priority list revisions
91.10(455B) Point source rating criteria

CHAPTER 92
STATE REVOLVING FUND LOANS FOR WASTEWATER TREATMENT

92.1(455B) Statutory authority
92.2(455B) Scope of title
92.3(455B) Definitions
92.4(455B) General policy
92.5(455B) Application procedures
92.6(455B) Intended use plan
92.7(455B) Loan and project initiation
92.8(455B) General administrative requirements
92.9(455B) Loan payment requirements
92.10(455B) Project requirements
92.11(455B) Loan agreement and repayment policy

CHAPTERS 93 to 99
Reserved

TITLE VIII

SOLID WASTE MANAGEMENT AND DISPOSAL

CHAPTER 100
SCOPE OF TITLE—DEFINITIONS—FORMS—RULES OF PRACTICE

100.1(455B,455D) Scope of title
100.2(455B,455D) Definitions
100.3(17A,455B) Forms and rules of practice

CHAPTER 101
GENERAL REQUIREMENTS RELATING TO SOLID WASTE MANAGEMENT AND DISPOSAL

101.1(455B,455D) Compliance
101.2(455B) Variances
101.3(455B) General conditions of solid waste disposal
101.4(455B,455D) Duties of cities and counties
101.5(455B,455D) Comprehensive plans
101.6(455B) Contracts with permitted agencies
101.7(455B) Disruption and excavation of sanitary landfills or closed dumps

CHAPTER 102
PERMITS

102.1(455B) Permit required
102.2(455B) Types of permits
102.3(455B) Applications for permits
102.4(455B) Preparation of plans
102.5(455B) Construction and operation
102.6(455B) Compliance with rule changes
102.7(455B) Amendments
102.8(455B) Transfer of title and permit
102.9(455B) Permit conditions
102.10(455B) Effect of revocation
102.11(455B) Inspection prior to start-up
102.12(455B) Primary plan requirements for all sanitary disposal projects
102.13(455B) Operator certification
102.14(455B) Operating requirements for all sanitary disposal projects
102.15(455B) Disposal of special wastes

CHAPTER 103
SANITARY LANDFILLS

103.1(455B) Scope and applicability
103.2(455B) General requirements for all sanitary landfills
103.3(455B) Specific requirements for a sanitary landfill proposing to accept all solid waste except toxic or hazardous waste

c. The load-bearing walls of any concrete formed manure storage structure with a designed manure storage depth of less than 120 inches shall be a minimum of 6 inches thick. The load-bearing walls of any concrete formed manure storage structure with a designed manure storage depth of 120 inches or greater shall be a minimum of 8 inches thick. The walls shall be reinforced with a minimum of either #4 rebar placed a maximum of 18 inches on center in each direction or the steel equivalent.

d. All load-bearing walls shall be formed with rigid forming systems and shall not be ground formed.

e. All construction joints of the formed manure storage structure shall be poured to prevent discontinuity of steel and concrete and have rebar placed through the joint that is properly spliced and overlaid.

65.15(15) Berm erosion control.

a. The following requirements shall apply to any anaerobic lagoons, earthen aerobic structures, or earthen manure storage basins constructed after May 12, 1999.

(1) Concrete, riprap, synthetic liners or similar erosion control materials or measures shall be used on the berm surface below pipes where manure will enter the anaerobic lagoon, aerobic structure, or earthen manure storage basin.

(2) Concrete, riprap, synthetic liners or similar erosion control materials or measures of sufficient thickness and area to accommodate manure removal equipment and to protect the integrity of the liner shall be placed at all locations on the berm, side slopes, and base of the anaerobic lagoon, aerobic structure, or earthen manure storage basin where agitation or pumping may cause damage to the liner.

(3) Erosion control materials or measures shall be used at the corners of the anaerobic lagoon, aerobic structure, or earthen manure storage basin.

b. The owner of a confinement feeding operation with an anaerobic lagoon, earthen aerobic structure, earthen manure storage basin, earthen waste slurry storage basin, or earthen egg washwater storage structure shall inspect the structure berms at least semiannually for evidence of erosion. Erosion problems found which may impact either structural stability or liner integrity shall be corrected in a timely manner.

65.15(16) Agricultural drainage wells. After May 29, 1997, a person shall not construct a new or expand an existing earthen aerobic structure, earthen anaerobic lagoon, earthen manure storage basin, earthen waste slurry storage basin, or earthen egg washwater storage structure within an agricultural drainage well area.

65.15(17) Secondary containment barriers for manure storage structures. Secondary containment barriers used to qualify any operation for the exemption provision in subrule 65.12(5) shall meet the following:

a. A secondary containment barrier shall consist of a structure surrounding or downslope of a manure storage structure that is designed to contain 120 percent of the volume of manure stored above the manure storage structure's final grade. If the containment barrier does not surround the manure storage structure, upland drainage must be diverted.

b. The barrier may be constructed of earth, concrete, or a combination of both and shall not have a relief outlet or valve.

c. The base shall slope to a collecting area where storm water can be pumped out. If storm water is contaminated with manure, it shall be land-applied at normal fertilizer application rates in compliance with rule 65.3(455B).

d. Secondary containment barriers constructed entirely or partially of earth shall comply with the following requirements:

(1) The soil surface, including dike, shall be constructed to prevent downward water movement at rates greater than 1×10^{-6} cm/sec and shall be maintained to prevent downward water movement at rates greater than 1×10^{-5} cm/sec.

(2) Dikes shall not be steeper than 45 degrees and shall be protected against erosion. If the slope is 19 degrees or less, grass can be sufficient protection, provided it does not interfere with the required soil seal.

(3) The top width of the dike shall be no less than 3 feet.

e. Secondary containment barriers constructed of concrete shall be watertight and comply with the following requirements:

(1) The base of the containment structure shall be designed to support the manure storage structure and its contents.

(2) The concrete shall be routinely inspected for cracks, which shall be repaired with a suitable sealant.

65.15(18) Human sanitary waste shall not be directed to a manure storage structure or egg washwater storage structure.

65.15(19) Requirements for qualified operations. A confinement feeding operation that meets the definition of a qualified operation shall only use an aerobic structure for manure storage and treatment. This requirement does not apply to a confinement feeding operation that only handles manure in a dry form or to an egg washwater storage structure or to a confinement feeding operation which was constructed before May 31, 1995, and does not expand.

567—65.16(455B) Manure management plan requirements.

65.16(1) In accordance with Iowa Code section 455B.202, the following persons are required to submit manure management plans to the department:

a. An applicant for a construction permit for a confinement feeding operation. However, a manure management plan shall not be required of an applicant for an egg washwater storage structure.

b. The owners of confinement feeding operations, other than a small animal feeding operation, if the operation was constructed or expanded after May 31, 1985, and regardless of whether the operation was required to have a construction permit. Owners of confinement feeding operations which submitted a manure management plan are not required to submit a new plan if the plan meets the requirements of Iowa Code section 455B.200 which are summarized in 65.17(455B). Persons who have previously submitted manure management plans which do not meet the current plan requirements, and persons who have not previously submitted a manure management plan but are now required to do so, have until July 1, 1999, to submit a manure management plan which meets the requirements.

c. A person who applies manure in Iowa that was produced in a confinement feeding operation, other than a small operation, located outside of Iowa.

d. A research college is exempt from this subrule and the manure management plan requirements of rule 65.17(455B) for research activities and experiments performed under the authority of the research college and related to animal feeding operations.

65.16(2) The department shall review and approve or disapprove all complete manure management plans within 60 days of the date they are received.

65.16(3) Manure shall not be removed from a manure storage structure, which is part of a confinement feeding operation required to submit a manure management plan, until the department has approved the plan. As an exception to this requirement, until July 1, 2002, the owner of a confinement feeding operation may remove and apply manure from a storage structure in accordance with a manure management plan which has been submitted to the department, but which has not been approved within the required 60-day period. Manure shall be applied in compliance with rule 65.2(455B).

65.16(4) All persons required to submit a manure management plan to the department shall also pay to the department an indemnity fee as required in Iowa Code section 455J.3 except those operations constructed prior to May 31, 1995, which were not required to obtain a construction permit.

567—65.22(455B) Validity of rules. If any part of these rules is declared unconstitutional or invalid for any reason, the remainder of said rules shall not be affected thereby and shall remain in full force and effect, and to that end, these rules are declared to be severable.

These rules are intended to implement Iowa Code chapter 455J; Iowa Code sections 455B.104, 455B.110, 455B.134(3)"*e*," 455B.161 to 455B.165, 455B.171 to 455B.188, 455B.191, and 455B.200 to 455B.206; and 1998 Iowa Acts, chapter 1209, sections 41 and 44 to 47.

[Filed 6/28/76, Notice 3/22/76—published 7/12/76, effective 8/16/76*]
[Filed emergency 6/3/83—published 6/22/83, effective 7/1/83]
[Filed 8/24/84, Notice 5/9/84—published 9/12/84, effective 10/18/84]
[Filed emergency 11/14/86—published 12/3/86, effective 12/3/86]
[Filed 5/29/87, Notice 12/3/86—published 6/17/87, effective 7/22/87]
[Filed without Notice 8/26/94—published 9/14/94, effective 10/19/94]
[Filed emergency 7/19/95—published 8/16/95, effective 7/19/95]
[Filed emergency 9/22/95—published 10/11/95, effective 9/22/95]
[Filed 1/26/96, Notice 11/8/95—published 2/14/96, effective 3/20/96]
[Filed 9/20/96, Notice 7/17/96—published 10/9/96, effective 11/13/96]
[Filed 11/26/97, Notice 8/13/97—published 12/17/97, effective 1/21/98]
[Filed 3/19/99, Notice 12/30/98—published 4/7/99, effective 5/12/99]
[Filed emergency 12/21/99—published 1/12/00, effective 12/21/99]
[Filed emergency 11/22/00—published 12/13/00, effective 11/22/00]

*Effective date of Chapter 65 [DEQ, ch 20] delayed by the Administrative Rules Review Committee until October 25, 1976, pursuant to Iowa Code section 17A.4 amended by S.F. 1288, §8.

TITLE VI
CERTIFICATION OF OPERATORS

CHAPTER 80
Reserved

CHAPTER 81
OPERATOR CERTIFICATION: PUBLIC WATER SUPPLY SYSTEMS AND WASTEWATER TREATMENT SYSTEMS
[Prior to 7/1/83, DEQ Ch 21]
[Prior to 12/3/86, Water, Air and Waste Management[900]]

567—81.1(455B) Definitions. In addition to the definitions in Iowa Code section 455B.211, the following definitions shall apply to this chapter.

"Activated sludge" means a biological wastewater treatment process in which a mixture of wastewater and sludge floc, produced in a raw or settled wastewater by the growth of microorganisms, is agitated and aerated in the presence of a sufficient concentration of dissolved oxygen, followed by sedimentation.

"Aerated lagoon system" means a lagoon system which utilizes aeration to enhance oxygen transfer and mixing in the cell.

"Aeration" means the process of initiating contact between air and water. This definition includes but is not limited to: spraying the water in the air, bubbling air through the water, or forcing the air into the water by pressure.

"Average daily pumpage" means the total quantity of water pumped during the most recent one-year period of record divided by 365 days.

"Chlorination" means the addition of a chlorine compound or chlorine gas to water to inactivate pathogenic organisms.

"Classification" means the type of plant or distribution system: wastewater treatment plants, water treatment plants, or water distribution systems.

"Coagulation" means a process using coagulation chemicals and mixing by which colloidal and suspended materials are destabilized and agglomerated into flocs.

"Community water system (CWS)" means a public water supply system which has at least 15 service connections used by year-round residents or regularly serves at least 25 year-round residents.

"Continuing education unit (CEU)" means ten contact hours of participation in an organized education experience approved by an accredited college, university, technical institute, or issuing agency, or by the department, and must be directly related to the subject matter of the particular certificate to which the credit is being applied.

"Directly related post-high school education" means post-high school education in chemistry, microbiology, biology, math, engineering, water, wastewater, or other curriculum pertaining to plant and distribution system operation.

"Director" means the director of the department of natural resources or a designee.

"Direct responsible charge (DRC)" means, where shift operation is not required, accountability for and performance of active, daily on-site operation of the plant or distribution system, or of a major segment of the plant or distribution system. Where shift operation is required, "direct responsible charge" means accountability for and performance of active, daily on-site operation of an operating shift, or a major segment of the plant or distribution system. A city manager, superintendent of public works, city clerk, council member, business manager, or other administrative official shall not be deemed to have direct responsible charge of a plant or distribution system unless this person's duties include the active, daily on-site operation of the plant or distribution system. On-site operation may not necessarily mean full-time attendance at the plant or distribution system.

"Direct surface water filtration" means a water treatment system that applies surface water and groundwater under the influence (influenced groundwater as defined in rule 567—40.2(455B)) directly to the filters after chemical treatment consisting of coagulation and flocculation or chemical treatment consisting of coagulation. This type of system eliminates the sedimentation unit process.

"Disinfection" means a process which inactivates pathogenic organisms in water by chemical oxidants or equivalent agents.

"Electrodialysis" means the demineralization of water by the removal of ions through special membranes under the influence of a direct-current electric field.

"Fixed film biological treatment" means a treatment process in which wastewater is passed over a media onto which are attached biological organisms capable of oxidizing the organic matter, normally followed by sedimentation. This definition includes but is not limited to: trickling filters, rotating biological contactors, packed towers and activated filters.

"Fluoridation" means the addition of fluoride to produce the optimum fluoride concentration in water.

"Grade" means one of seven certification levels, designated as A, I, IL, II, IIL, III, or IV.

"Ion exchange" means the process of using ion exchange materials such as resin or zeolites to remove undesirable ions from water and substituting acceptable ions, for example, ion exchange for nitrate removal or ion exchange for softening.

"Issuing agency" means a professional, technical/educational organization authorized by the department to provide continuing education for certification renewal or upgrade in accordance with the commitments and guidelines detailed in the written issuing agency agreement and procedures.

"Nontransient noncommunity water system (NTNC)" means a public water system other than a community water system which regularly serves at least 25 of the same persons four hours or more per day for four or more days per week for 26 or more weeks per year.

"Operator-in-charge" means a person or persons on site in direct responsible charge for a plant or distribution system. A city manager, superintendent of public works, city clerk, council member, business manager, or other administrative official shall not be deemed to be the operator-in-charge of a plant or distribution system unless this person's duties include the active, daily on-site operation of the plant or distribution system. On-site operation may not necessarily mean full-time attendance at the plant or distribution system.

"Plant" means those facilities which are identified as either a water treatment plant or wastewater treatment plant as defined in Iowa Code section 455B.211.

"Population equivalent" for a wastewater treatment plant means the calculated number of people who would contribute the same biochemical oxygen demand (BOD) per day as the system in question, assuming that each person contributes 0.167 pounds of five-day, 20°C, BOD per day.

"Post-high school education" means credit received for completion of courses given or cosponsored by an accredited college, university, technical institute, or issuing agency. Courses offered by regulatory agencies may also be recognized as post-high school education. One year of post-high school education is 30 semester hours or 45 quarter hours or 45 CEUs of credit.

"Primary treatment" means a treatment process designed to remove organic and inorganic settleable solids from wastewater by the physical process of sedimentation.

"Public water system certificate" means a certificate issued by the department certifying that an operator has successfully completed the certification requirements of this chapter. The certificate specifies the grades and classifications for which the certificate is valid.

"Reverse osmosis" means the process in which external pressure is applied to mineralized water against a semipermeable membrane to effectively reduce total dissolved solids (TDS) and radionuclides content as the water is forced through the membrane.

"Rural water district" means a water supply incorporated and organized as such pursuant to Iowa Code chapter 357A or 504A.

"Stabilization" means the addition of chemical compounds to water to maintain an ionic equilibrium whereby the water is not in a depository or corrosive state.

"Waste stabilization lagoon" means an excavation designed and constructed to receive raw or pretreated wastewater in which stabilization is accomplished by several natural self-purification processes. This definition includes both anaerobic and aerobic lagoons.

"Wastewater treatment plant" means the facility or group of units used for the treatment of wastewater from public sewer systems and for the reduction and handling of solids removed from such wastes.

"Water distribution system" means that portion of the water supply system in which water is conveyed from the water treatment plant or other supply point to the premises of the consumer, including storage facilities and pumping stations. For the purposes of this chapter, a water distribution system does not include individual service lines to the premises of the consumer, which are not under the control of the system.

"Water supply system" means the system of pipes, structures, and facilities through which water for a public water supply is obtained, treated, sold or distributed for human consumption or household use.

"Water treatment plant" means that portion of the water supply system which in some way alters the physical, chemical, or microbiological quality of the water.

567—81.2(455B) General.

81.2(1) *Plant grade for system with multiple treatment processes.* A plant having a combination of treatment processes that are in different grades shall be assigned the highest numerical plant grade of that combination.

81.2(2) *Increase in facility grade for complex systems.* The director may increase a plant or water distribution system grade above that indicated in rules 81.3(455B) to 81.6(455B) for those systems which in the judgment of the director include unusually complex treatment processes, complex distribution systems, or which present unusual operation or maintenance conditions.

81.2(3) *Operator-in-charge certification requirement.* The operator-in-charge shall hold a certificate of the same classification of the plant or water distribution system and of equal or higher grade than the grade designated for that plant or distribution system.

81.2(4) *Shift operator certification.* Any person who is responsible for the operation of an operating shift of a plant or distribution system or major segment of the plant or distribution system and is under the supervision of the operator-in-charge identified in 81.2(3) shall be certified in a grade no less than a Grade II level for Grade III and IV plants and distribution systems and Grade I for Grade I and II plants and distribution systems.

81.2(5) *Public water system certificate requirement.* The operator who is designated by the owner to be the operator-in-charge of both the water treatment plant and the water distribution system shall hold a public water system (PWS) certificate valid for water treatment and water distribution in accordance with 81.2(3) and 81.2(6).

81.2(6) *PWS certificate.* A PWS certificate shall be issued to an operator successfully completing water treatment or water distribution certification. The PWS certificate shall specify the grade and classification for which the certificate is valid. An operator successfully completing both water treatment and water distribution certification shall be issued a PWS certificate valid for both classifications. For purposes of renewal, all renewal fees and CEU requirements shall be applied as one certification. The number of CEUs required shall be determined by the highest certification grade on the operator's public water system certificate.

81.2(7) *PWS certificate issuance.* An operator who holds a valid water treatment or water distribution certificate on March 31, 2001, and who renews the certificate for the July 1, 2001, through June 30, 2003, renewal period shall be issued a PWS certificate as follows:

a. Grades I and II water treatment certificate holder. A Grade I or II water treatment certificate holder shall be issued a PWS certificate valid for the appropriate water treatment and water distribution classifications providing that the certificate holder requests the water distribution certification and certifies on the renewal application that the certificate holder has at least one year of distribution experience. The following table shows the appropriate conversion.

Operator Certification Conversion for Water Treatment Certifications for Grades I and II

Current Certificate Type*	Current Certificate Grade*	New WT Grade	WD certification requested by operator?	Did operator certify at least one year of WD experience?	New WD Certification
WT	I	I	Yes	Yes	Grade II
				No	Grade I
WT	II	II	Yes	Yes	Grade III
				No	Grade II

*As of March 31, 2001.
WT = Water Treatment
WD = Water Distribution

b. Grades III and IV water treatment certificate holder. A Grade III or IV water treatment certificate holder shall be issued a PWS certificate valid for the appropriate water treatment and water distribution classifications providing that the certificate holder requests the distribution system certification on the renewal application and certifies on the renewal application that the certificate holder has at least two years of operating experience in a water distribution system. The following table shows the appropriate conversion.

Operator Certification Conversion for Water Treatment Certifications for Grades III and IV

Current Certificate Type*	Current Certificate Grade*	New WT Grade	WD certification requested by operator?	Did operator certify one year of direct responsible charge?	Did operator certify at least two years of WD experience?	New WD Certification
WT	III	III	Yes	Yes	Yes	Grade IV
				No	No	Grade III
WT	IV	IV	Yes	Yes	Yes	Grade IV
				No	Yes	Grade III

*As of March 31, 2001.
WT = Water Treatment
WD = Water Distribution

c. Water distribution certificate holder. A water distribution certificate holder shall be issued a PWS certificate valid for the appropriate water distribution classification as listed in the following table:

Operator Certification Conversion for Water Distribution Certifications

Current Certificate Type*	Current Certificate Grade*	WD experience?	New WD Certification
WD	I	Yes	Grade II
WD	II	Yes	Grade III
WD	III	Yes	Grade IV

*As of March 31, 2001.
WD = Water Distribution

d. PWS certificate renewal. Upon renewal of the operator's certificate in accordance with the criteria of this subrule, the operator shall be issued a PWS certificate. For purposes of renewal, all renewal fees and CEU requirements shall be applied as one certification. The number of CEUs required shall be determined by the highest certification grade on the operator's PWS certificate.

81.2(8) *Notification requirements for a personnel change in the operator-in-charge.* The owner of a plant or distribution system must notify the department of a change in operator(s)-in-charge within 30 days after the change.

81.2(9) *Change of address or employment.* Certified operators must report to the department a change in address or employment within 30 days after the change.

81.2(10) *Owner reporting requirements.* All owners of plants and distribution systems must report, when requested by the department, the method of treatment provided, the average daily pumpage, and the operator(s)-in-charge.

81.2(11) *Compliance plan.* When the director allows the owner of a plant or distribution system required to have a certified operator time to obtain an operator, the owner must submit a compliance plan indicating what action will be taken to obtain a certified operator. The plan must be on Form 52, Compliance Plan 542-3120, provided by the department and must be submitted within 30 days of the facility owner's receipt of a notice of violation.

567—81.3(455B) Wastewater treatment plant grades.

81.3(1) *Classifications.* The wastewater treatment plant classifications are listed in the following table:

Wastewater Treatment Plant Classifications

Treatment Type	Grade				
	Based on Design Pounds of BOD_5/day				
	less than 334	334-835	836-2,505	2,506-8,350	more than 8,350
	Based on Design Population Equivalent				
	less than 2,000	2,000-5,000	5,001-15,000	15,001-50,000	more than 50,000
1. Primary Treatment	I	I	II	III	IV
2. Waste Stabilization Lagoon	IL	IL	IL	IL	IL
3. Aerated Lagoon System	IL	IL	IIL	IIL	IIL
4. Fixed Film Biological Treatment	II	II	III	III	IV
5. Activated Sludge	II	III	III	IV	IV

81.3(2) *Unknown design BOD_5 loading.* When the design BOD_5 loading is unknown, the plant BOD_5 loading shall be determined by using the average pounds of BOD_5 of the 24-hour composite samples taken in the last 12 months. If no 24-hour composite samples were taken, then grab samples shall be used.

81.3(3) *IL and IIL wastewater operator requirements.* A Grade I, II, III, or IV wastewater treatment certificate will satisfy the certification requirements for a Grade IL plant. A Grade II, III, or IV wastewater treatment certificate will satisfy the certification requirements for a Grade IIL plant.

567—81.4(455B) Water treatment plant grades.

81.4(1) *Classifications.* The water treatment plant classifications are listed in the following table:

Water Treatment Plant Classifications

Treatment Type	Grade*			
	Average Daily Pumpage in MGD			
	0-0.1	>0.1-0.5	>0.5-1.5	>1.5
1. Iron or manganese removal; aeration; chlorination; fluoridation; stabilization; any other chemical addition; or any combination of these processes	I	II	II	III
2. Ion exchange	II	II	III	III
3. Direct surface water filtration	II	II	III	III
4. Utilization of lime, soda ash or other chemical addition for pH adjustment in the precipitation and coagulation of iron or manganese	II	II	III	III
5. Complete surface water clarification or lime softening of surface water or groundwater	III	III	III	IV
6. Reverse osmosis and electrodialysis	II	II	III	IV
7. Activated carbon for THM or synthetic organics removal	III	III	III	IV

*For Grade A water supply classification, see subrule 81.6(1).

81.4(2) *Average daily pumpage.* When the average daily pumpage is unknown, the plant grade will be determined from the population of the most recent census and an evaluation of commercial, industrial, and other users.

567—81.5(455B) Water distribution system grades.

81.5(1) *Classifications.* The water distribution plant classifications are listed in the following table:

Water Distribution System Classifications*

System Type	Grade**			
	Average Daily Pumpage in MGD			
	0-0.1	>0.1-1.5	>1.5-5	>5
All municipal water systems	I	II	III	IV
Community water systems not classified as a Grade A water system	I	II	III	IV
Nontransient noncommunity water systems not classified as a Grade A water system	I	II	III	IV
	Miles of Pipe			
	0-100	>100-1,000	>1,000-2,500	>2,500
Rural water districts	II	II	III	IV

*Note: A public water system with a well, storage, and a distribution system shall be classified as a water distribution system if no treatment is provided.

**For Grade A water system classification, see subrule 81.6(1).

81.5(2) *Average daily pumpage.* When the average daily pumpage is unknown, the system grade will be determined from the population of the most recent census and an evaluation of commercial, industrial, and other users.

81.5(3) *IR certificate holders.* Operators with a IR certificate issued before July 1, 1999, may be issued a Grade I water distribution certificate restricted to the specific system(s) at which the IR certificate holder has been designated as the operator-in-charge. No fee or examination shall be required for the reclassification. The certificate issued shall be subject to renewal, continuing education requirements, and all other provisions of this chapter.

567—81.6(455B) Grade A classification.

81.6(1) *Grade A water system classification.*

a. *Community water system.* A community water system, other than a municipal or rural water system, which serves a population of 250 persons or less and provides no treatment other than hypochlorination or treatment which does not require any chemical addition, process adjustment, backwashing or media regeneration by an operator shall be classified as a Grade A water system.

b. *Nontransient noncommunity water system.* A nontransient noncommunity water system which serves a population of 500 persons or less and provides no treatment other than hypochlorination or treatment which does not require any chemical addition, process adjustment, backwashing or media regeneration by an operator shall be classified as a Grade A water system.

81.6(2) *Certification requirements for Grade A water systems.* Any grade of water treatment certification will satisfy the certification requirements for a Grade A water system with hypochlorination. Any grade of water distribution certification will satisfy the certification requirements for a Grade A water system without hypochlorination.

567—81.7(455B) Operator education and experience qualifications.

81.7(1) *Education and experience requirements.* All applicants shall meet the education and experience requirements for the grade of certificate shown in the table below prior to being allowed to take the examination. Experience shall be in the same classification for which the applicant is applying except that partial credit may be given in accordance with 81.7(2) and 81.7(3). Directly related post-high school education shall be in the same subject matter as the classification in which the applicant is applying. Directly related post-high school education will be granted education credit 2.0 times the number of semester, quarter or CEU credits until January 1, 2006. The director will determine which courses qualify as "directly related" in cases which are not clearly defined.

Operator Education and Experience Qualifications

Grade	Education	Substitution for Education	Experience	Substitution for Experience
A	High school diploma or GED	None	Completion of an IDNR-approved training course	None
I	High school diploma or GED	None	1 year	See 81.7(3)"*b*"(1), (3) to (5)
IL	High school diploma or GED	None	1 year	See 81.7(3)"*b*"(1), (3) to (5)
II	High school diploma or GED	None	3 years	See 81.7(3)"*b*"(2) to (5)
IIL	High school diploma or GED	None	3 years	See 81.7(3)"*b*"(2) to (5)
III	High school diploma or GED and 2 years of post-high school education (1 year must be directly related)	See 81.7(3)"*a*" (1), (3)	4 years of experience in a Grade I or higher	See 81.7(3)"*b*"(2), (3)
IV	High school diploma or GED and 4 years of post-high school education (2 years must be directly related)	See 81.7(3)"*a*" (2), (3)	4 years of experience including 2 years of DRC in a Grade III or higher	See 81.7(3)"*b*"(2), (3) and 81.7(3)"*c*"

81.7(2) *Related work experience.* The following substitutions of related work experience for operating experience requirements may be accepted by the director.

a. *Laboratory personnel.* Laboratory personnel employed in water or wastewater treatment plants may be allowed 50 percent credit for work experience toward meeting the operating experience requirements for Grades I and II certification only. Laboratory experience must be in the same classification for which the applicant is applying.

b. *Oversight personnel.* Personnel with experience in on-site operation review and evaluation of plants and distribution systems may be allowed 50 percent credit for on-site work experience toward meeting the operating experience requirements for Grades I and II certification only. On-site experience must be in the same classification for which the applicant is applying.

c. *Maintenance personnel.* Maintenance personnel employed in water or wastewater treatment plants may be allowed 50 percent credit for work experience toward meeting the operating experience requirements for Grades I and II certification only. Maintenance experience may be applied either to the water or to the wastewater experience requirements.

d. Certified operators.

(1) Certified water treatment operators may be allowed 50 percent credit for work experience toward meeting the operating experience requirements for Grades I and II wastewater treatment certification only.

(2) Certified wastewater treatment operators may be allowed 50 percent credit for work experience toward meeting the operating experience requirements for Grades I and II water treatment certification only.

(3) Certified water treatment operators may be allowed 50 percent credit for work experience toward meeting the operating experience requirements for Grades I and II water distribution certification only.

(4) Certified water distribution operators may be allowed 50 percent credit for work experience toward meeting the operating experience requirements for Grades I and II water treatment certification only.

e. Limitation. The portion of related work experience that is substituted for operating experience cannot also be used to substitute for education.

81.7(3) *Experience and education substitutions.* The following substitutions for experience or education may be accepted by the director.

a. Substitution of experience for education.

(1) One year of operating experience in a Grade II or higher position may be substituted for one year of post-high school education for Grade III certification up to one-half the post-high school education requirement.

(2) One year of operating experience in a Grade III or higher position may be substituted for one year of post-high school education for Grade IV certification up to one-half the post-high school education requirement.

(3) That portion of experience which is applied toward substitution for education cannot also be used for experience.

b. Substitutions of education for experience.

(1) Two semester hours or three quarter hours or three CEUs of directly related post-high school education may be substituted for one-half the experience requirement for Grades I and IL.

(2) Thirty semester hours or 45 quarter hours or 45 CEUs of post-high school education may be substituted for one year of experience up to a maximum of one-half the experience requirement for Grades II, IIL, III and IV.

(3) That portion of education which is applied toward substitution for experience cannot also be used for education.

(4) Class hours involving closely supervised on-the-job type training in a pilot or full-scale facility where there are clearly defined educational objectives may be applied to the on-the-job experience requirement. The substitution value of such training shall be applicable only toward obtaining a Grade I and Grade II certification and shall not exceed one-half year of on-the-job experience. One hour of on-the-job training is equivalent to three hours of on-the-job experience. One month of on-the-job training consists of 20 eight-hour days. Credit for on-the-job training may be applied only to the examination for the type of system in which the experience was obtained.

(5) That portion of on-the-job training courses which is applied toward substitution for the on-the-job experience requirement cannot also be used for education.

c. Substitution of education for direct responsible charge experience. Thirty semester hours or 45 quarter hours or 45 CEUs of directly related post-high school education may be substituted for one year of direct responsible charge experience up to one-half the requirement for Grade IV certification.

567—81.8(455B) Certification and examination fees.

81.8(1) *Examination fee.* The examination fee for each examination shall be $30.

81.8(2) *Oral examination fee.* The oral examination fee for each oral examination shall be $90.

81.8(3) *Reciprocity application fee.* The reciprocity application fee for each type of classification shall be $30.

81.8(4) *Certification fee.* The certification fee shall be $20 for each one-half year of a two-year period from the date of issuance to June 30 of odd-numbered years.

81.8(5) *Renewal fee.* The certification renewal fee shall be $60.

81.8(6) *Penalty fee.* The certification and renewal penalty fee shall be $18.

81.8(7) *Duplicate certificate fee.* The duplicate certificate fee shall be $20.

81.8(8) *Temporary certificate fee.* The temporary certificate fee shall be $60.

81.8(9) *Fee adjustments.* The department may adjust the fees annually by up to plus or minus 20 percent to cover costs of administering and enforcing these rules and reimbursement for other expenses relating to operator certification. The environmental protection commission must approve any fee increases above those listed in 81.8(1) through 81.8(8). All fees collected shall be retained by the department for administration of the operator certification program.

567—81.9(455B) Examinations.

81.9(1) *Examination application.* All persons wishing to take the examination required to become a certified operator of a wastewater or water treatment plant or a water distribution system shall complete the Operator Certification Examination Application, Form CFN-542-3118/CPG-63997. A listing of dates and locations of examinations is available from the department upon request. The application form requires the applicant to indicate educational background, training and past experience in water or wastewater operation. The completed application and examination fee shall be sent to Iowa Department of Natural Resources, Operator Certification, 502 East Ninth, Des Moines, Iowa 50319-0034. The completed application and examination fee must be received by the department at least 30 days prior to the date of examination.

81.9(2) *Application evaluation.* The director shall designate department personnel to evaluate all applications for examination, certification, and renewal of certification and upgrading of certification. The director will review applications when it is indicated the applicant has falsified information or when questions arise concerning an applicant's qualifications of eligibility for examination or certification.

81.9(3) *Application expiration.* A properly completed application for examination shall be valid for one year from the date the application is approved by the department. An applicant may request only one class and grade of examination with each application. A new application shall be required with each different class or grade of examination desired by the applicant.

81.9(4) *Refund of examination fee.* An applicant who does not qualify for examination at the time of application will have the examination fee refunded if the applicant cannot qualify for examination within one year. If the applicant will qualify for a scheduled examination within one year, the applicant will be notified when the examination may be taken and the fee will not be refunded.

81.9(5) *Reexamination.* Upon failure of the first examination, the applicant may be reexamined at the next scheduled examination. Upon failure of the second examination, the applicant shall be required to wait a period of 180 days between each subsequent examination.

81.9(6) *Reexamination fee.* Upon each reexamination when a valid application is on file, the applicant shall submit the examination fee to the department at least ten days prior to the date of examination.

81.9(7) *Application invalidation.* Failure to successfully complete the examination within one year from the date of approval of the application shall invalidate the application.

81.9(8) *Retention of completed examinations.* Completed examinations will be retained by the director for a period of one year after which they will be destroyed.

81.9(9) *Oral examination.* Upon written request by an applicant for Grade A, I, IL, II or IIL certification, the director will consider the presentation of an oral examination on an individual basis when the plant or distribution system which employs the applicant is not in compliance with Iowa Code section 455B.113; the applicant has failed the written examination at least twice; the applicant has shown difficulty in reading or understanding written questions but may be able to respond to oral questioning; the applicant is capable of communicating in writing with regard to departmental requirements and inquiries; and the director has received a written recommendation for an oral examination from a department staff member attesting to the operational and performance capabilities of the applicant. The director shall designate department personnel to administer the examination. The examination shall contain practical questions pertaining to the operation of the plant or distribution system in which the applicant is employed. Certificates issued to operators through oral examinations shall be restricted to the plant or distribution system where the operator is employed at the time of certification.

81.9(10) *Reasonable accommodation.* Upon request for certification by an applicant, the director will consider on an individual basis reasonable accommodation to allow administration of the examination without discrimination on the basis of disability. The applicant shall request the accommodation 30 days prior to the date of the examination. The applicant must provide documentation of eligibility for the accommodation. Documentation shall be submitted with the completed examination application. Accommodations based on documentation may include site accessibility, oral examination, extended time, separate testing area, or other concerns.

567—81.10(455B) Certification by examination.

81.10(1) *Examination requirement.* All applicants not addressed for certification in 81.11(1) shall successfully complete and pass an examination prior to receiving certification.

81.10(2) *Certification application time line.* Application for certification must be received by the department within 30 days of the date the applicant receives notification of successful completion of the examination. All applications for certification shall be made on a form provided by the department and shall be accompanied by the certification fee.

81.10(3) *Late certification application.* Applications for certification by examination which are received more than 30 days but less than 60 days after notification of successful completion of the examination shall be accompanied by the certification fee and the penalty fee. Applicants who do not apply for certification within 60 days' notice of successful completion of the examination will not be certified on the basis of that examination.

567—81.11(455B) Certification by reciprocity.

81.11(1) *Other states' mandatory certification programs.* For applicants who have been certified under other states' mandatory certification programs, the equivalency of which has been previously reviewed and accepted by the department, certification in an appropriate classification and grade, without examination, will be recommended. The applicant must have successfully completed an examination generally equivalent to the Iowa examination and must meet the education and experience qualifications established by the director.

81.11(2) *Other states' voluntary certification programs.* For applicants who have been certified under voluntary certification programs in other states, certification in an appropriate class will be considered. The applicant must have successfully completed an examination generally equivalent to the Iowa examination and must meet the education and experience qualifications established by the director. The director may require the applicant to successfully complete the Iowa examination.

81.11(3) *Reciprocity application.* Applicants who seek Iowa certification pursuant to subrule 81.11(1) or 81.11(2) shall submit an application for examination accompanied by a letter requesting certification pursuant to these subrules. Application for certification pursuant to 81.11(1) and 81.11(2) shall be received by the director in accordance with these subrules.

567—81.12(455B) Restricted and temporary certification.

81.12(1) *Restricted certification.* Upon written request by an operator, the director may determine that further education requirements be waived when a plant or distribution system grade has been increased and the operator has been in direct responsible charge of the existing plant or distribution system. An operator successfully completing the examination will be restricted to that plant or distribution system until the education requirements are met.

81.12(2) *Temporary certification.* Upon written request by the owner of a plant or system not previously required to have a certified operator, the director may issue a temporary certificate of the appropriate grade and classification to the operator(s)-in-charge. The temporary certificate holder will be restricted to that plant or distribution system until all certification requirements, in accordance with rules 81.6(455B), 81.8(455B) and 81.9(455B), are met. The temporary certificate is not renewable and will expire 24 months after issuance. No temporary certificates will be issued to operators of new water plants or distribution systems, as defined in 567—subrule 43.8(1).

567—81.13(455B) Certification renewal.

81.13(1) *Renewal period.* All certificates shall expire on June 30 of odd-numbered years and must be renewed every two years in order to maintain certification.

81.13(2) *Application for renewal.* An application for renewal will be mailed to currently certified operators prior to the expiration date of their certificates. Application for renewal must be made in accordance with this rule and the instructions on the form in order to renew the certificate for the next two years. Application for renewal of a certificate without penalty must be received by the director or postmarked prior to the expiration of the certificate, and shall be accompanied by the certification renewal fee.

81.13(3) *Late application.* A late application for renewal of a certificate may be made provided that the application is received by the director or postmarked within 60 days of the expiration of the certificate on forms provided by the department. Such late application shall be accompanied by the penalty fee and the certification renewal fee.

81.13(4) *Failure to renew.* If a certificate holder fails to renew within 60 days following expiration of the certificate, the right to renew the certificate is automatically terminated. Certification may be allowed at any time following such termination, provided that the applicant successfully completes an examination. The applicant must then apply for certification in accordance with 81.10(455B).

81.13(5) *Expired certificate.* An operator may not continue as the operator-in-charge of a plant, distribution system, operating shift, or major segment of the plant or distribution system after expiration of a certificate unless the certificate is renewed.

567—81.14(455B,272C) Continuing education.

81.14(1) *CEU requirements.* Continuing education must be earned during two-year periods between April 1 and March 31 of odd-numbered years. A Grade III or IV certified operator must earn two units or 20 contact hours per certificate during each two-year period. All other certified operators must earn one unit or 10 contact hours per certificate during each two-year period. Newly certified operators (previously uncertified) who become certified after April 1 of a two-year period will not be required to earn CEUs until the next two-year period. If an operator upgrades a certificate after April 1 of a two-year period and that upgrade increases the CEU requirement, the operator will not be required to meet the higher CEU requirement until the next two-year period but must fulfill the lower CEU requirement for that period. For those certified operators holding both a water treatment and a water distribution certification, no more than 75 percent of the required CEUs may be earned in any one area.

81.14(2) *Certificate renewal.* Only those operators fulfilling the continuing education requirements before the end of each two-year period (March 31) will be allowed to renew their certificate(s). The certificate(s) of operators not fulfilling the continuing education requirements shall expire on June 30 of the applicable biennium.

81.14(3) *CEU approval.* All activities for which continuing education credit will be granted must be approved by an accredited college, university, technical institute, or issuing agency, or by the department, and must be directly related to the subject matter of the particular certificate to which the credit is being applied.

81.14(4) *CEU extensions.* The director may, in individual cases involving hardship or extenuating circumstances, grant an extension of up to three months within which the certified operator may fulfill the minimum continuing education requirements. Hardship or extenuating circumstances include documented health-related confinement or other circumstances beyond the control of the certified operator which prevent attendance at the required activities. All requests for extensions must be made prior to March 31 of each biennium.

81.14(5) *CEU reporting.* It is the certified operator's personal responsibility to maintain a written record and to notify the department of the continuing education credit earned during the period. The continuing education credits earned during the period shall be listed on the application for renewal.

567—81.15(455B) Upgrading of certificates. A person holding an unexpired certificate may upgrade the certificate by examination to a higher grade in the same classification in accordance with 81.7(455B), 81.9(455B) and 81.10(455B). The expiration date of the upgraded certificate shall be the same as the unexpired certificate. A person who upgrades a certificate during the biennium must also renew the upgraded certificate in accordance with 81.13(455B) and 81.14(455B, 272C) to maintain the person's certification.

567—81.16(455B) Operator by affidavit.

81.16(1) *Affidavit allowance.* The owner of a plant or distribution system that is required to have a Grade A, I, IL, II, IIL certified operator may sign an affidavit with a certified operator of the required classification and grade.

81.16(2) *Affidavit requirements.* This affidavit will verify that the certified operator is the operator-in-charge and has direct responsibility for a plant or distribution system that does not have first rights on the services of that operator. The affidavit form shall be provided by the director and shall require the name and signature of the certified operator, the operator's certification number, class and grade, and the date of last renewal of the operator's certificate. The affidavit form shall be proof that the certified operator has agreed to be directly responsible for the operation and maintenance of the plant or distribution system. The director may specify additional operational and maintenance requirements based on the complexity and size of the plant or distribution system. Four duly notarized copies of the affidavit must be returned to and approved by the director, based upon the ability of the certified operator to properly operate and maintain additional facilities. In event of disapproval, the owner of the plant or distribution system must terminate the agreement with the certified operator and seek the services of another certified operator. Both the owner of the plant or distribution system and the certified operator shall notify the director at least 30 days before the termination of the agreement.

567—81.17(455B,272C) Disciplinary actions.

81.17(1) *Reasons for disciplinary action.* Disciplinary action may be taken against a certified operator on any of the grounds specified in Iowa Code section 455B.219 and chapter 272C and the following more specific grounds.

a. Failure to use reasonable care or judgment or to apply knowledge or ability in performing the duties of a certified operator.

(1) Wastewater operator duties. Examples of a wastewater operator's duties are specified in the Water Environment Federation Manual of Practice #11, 1996; California State University—Sacramento (CSUS) Operation of Wastewater Treatment Plants, Volume I, 4th edition, 1998; CSUS Operation of Wastewater Treatment Plants, Volume II, 4th edition, 1998; CSUS Advanced Waste Treatment, 3rd edition, 1998; and 567—Chapters 60 through 64, 67, and 83, Iowa Administrative Code.

(2) Water treatment or distribution operator duties. Examples of a water treatment or distribution operator's duties are specified in the American Water Works Association (AWWA) Manuals of Water Supply Practice (Volumes 1, 3-7, 9, 11-12, 14, 17, 19-38, 41-42, 44-48); AWWA Water Supply Operations Series, 2nd edition: Vol. 1, 1995; Vol. 2, 1995; Vol. 3, 1996; Vol. 4, 1995; and Vol. 5, 1995; AWWA Water Distribution Operator Handbook, 2nd edition, 1976; and California State University—Sacramento (CSUS) Water Treatment Plant Operation, Volume I, 4th edition, 1999; CSUS Water Treatment Plant Operation, Volume II, 3rd edition, 1998; CSUS Small Water System Operation and Maintenance, 4th edition, 1999; CSUS Water Distribution System Operation and Maintenance, 4th edition, 2000; and 567—Chapters 40 through 43 and 83, Iowa Administrative Code.

b. Failure to submit required records of operation or other reports required under applicable permits or rules of the department, including failure to submit complete records or reports.

c. Knowingly making any false statement, representation, or certification on any application, record, report or document required to be maintained or submitted under any applicable permit or rule of the department.

d. Fraud in procuring a license.

e. Professional incompetence.

f. Knowingly making misleading, deceptive, untrue or fraudulent representations in the practice of the licensee's profession or engaging in unethical conduct or practice harmful or detrimental to the public. Proof of actual injury need not be established.

g. Habitual intoxication or addiction to the use of drugs.

h. Conviction of a felony related to the profession or occupation of the licensee. A copy of the record of conviction or plea of guilty shall be conclusive evidence.

i. Fraud in representations as to skill or ability.

j. Use of untruthful or improbable statements in advertisements.

k. Willful or repeated violations of the provisions of Iowa Code chapter 272C or 455B, division III.

81.17(2) *Disciplinary sanctions.* Disciplinary sanctions may include those specified in Iowa Code section 272C.3(2) and the following:

a. *Revocation of a certificate.* Revocation may be permanent without chance of recertification or for a specified period of time.

b. *Partial revocation or suspension.* Revocation or suspension of the practice of a particular aspect of the operation of a plant or distribution system, including the restriction of operation to a particular plant or distribution system, or a particular type of plant or distribution system.

c. *Probation.* Probation under specified conditions relevant to the specific grounds for disciplinary action.

d. *Additional education, training, and examination requirements.* Additional education, training, and reexamination may be required as a condition of reinstatement.

e. *Penalties.* Civil penalties not to exceed $1,000 may be assessed for causes identified in 81.17(1).

81.17(3) *Procedure.*

a. *Initiation of disciplinary action.* The department staff shall initiate a disciplinary action by conducting such lawful investigation as is necessary to establish a legal and factual basis for action. The administrator of the environmental protection commission or designee shall make a decision as to any disciplinary action based on the department staff recommendations. Except as specified by this subrule, the disciplinary action shall be initiated by a notice of intended action in accordance with rule 561—7.16(17A,455A). At any time, the licensee and the department may enter into a settlement agreement, subject to approval by the director, which provides for a disciplinary sanction.

b. Request for hearing. Notwithstanding references in 561—subrule 7.16(4), a licensee shall be deemed to have waived any right to a contested case hearing unless the licensee appeals the action and requests a hearing within 30 days of receipt of the notice of intended action. If a timely appeal is filed, further contested case procedures shall apply in accordance with 561—Chapter 7.

c. Appeal and review of proposed decision. After a contested case hearing conducted in accordance with rule 561—7.14(17A,455A), the director shall review the presiding officer's proposed decision issued in accordance with 561—subrule 7.15(3). The proposed decision shall constitute a final decision of the director and the department unless the licensee or the director and department appeal the proposed decision to the environmental protection commission within 30 days of receipt as provided in 561—subrule 7.15(5).

d. Effective date of suspension or revocation. Notwithstanding any contrary interpretation in 561—subrule 7.16(7), suspension, revocation or other disciplinary action shall be effective 30 days after receipt of the notice of intended action if the licensee fails to file a timely appeal and request for hearing. If a contested case hearing is timely requested, the disciplinary action is effective as specified in the presiding officer's proposed decision unless the licensee obtains a stay of the action in accordance with 561—subrule 7.15(7) pending a timely appeal to the environmental protection commission.

e. Emergency disciplinary action. The director may initiate an emergency suspension or other disciplinary action upon such grounds and following those procedures as provided in 561—subrule 7.16(6). The terms of the emergency order shall be effective upon service as provided in 561—subrule 7.16(7). The department shall promptly give notice of an opportunity to appeal and request a contested case hearing following the procedures as specified above.

f. Reinstatement of revoked certificates. Upon revocation of a certificate in accordance with the authority provided in Iowa Code section 455B.219 and chapter 272C, application for certification may be allowed after two years from the date of revocation unless otherwise specified in accordance with 81.17(2). Any such applicant must successfully complete an examination and be certified in the same manner as a new applicant.

81.17(4) *Noncompliance with child support order procedures.* Upon receipt of a certification of noncompliance with a child support obligation as provided in Iowa Code section 252J.7, the department will initiate procedures to deny an application for certification or renewal, or to suspend a certification in accordance with Iowa Code section 252J.8(4). The department shall issue to the person by restricted certified mail a notice of its intent to deny or suspend operator certification based on receipt of a certificate of noncompliance. The suspension or denial shall be effective 30 days after receipt of the notice unless the person provides the department with a withdrawal of the certificate of noncompliance from the child support recovery unit as provided in Iowa Code section 252J.8(4)"*c.*" Pursuant to Iowa Code section 252J.8(4), the person does not have a right to a hearing before the department to contest the denial or suspension action under this subrule but may seek a hearing in district court in accordance with Iowa Code section 252J.9.

These rules are intended to implement Iowa Code sections 455B.211 to 455B.224 and chapter 272C.

[Filed June 10, 1966; amended August 31, 1971, December 17, 1973, July 1, 1975]
[Filed 12/22/76, Notice 7/26/76—published 1/12/77, effective 2/16/77]
[Filed 2/25/77, Notice 12/15/76—published 3/23/77, effective 4/27/77]
[Filed emergency 7/27/78—published 8/23/78, effective 7/27/78]
[Filed 10/13/78, Notice 5/31/78—published 11/1/78, effective 12/6/78]
[Filed 1/20/82, Notice 7/22/81—published 2/17/82, effective 3/24/82]
[Filed emergency 6/3/83—published 6/22/83, effective 7/1/83]
[Filed 12/2/83, Notices 6/22/83, 7/20/83—published 12/21/83, effective 1/25/84]
[Filed 12/28/84, Notice 10/10/84—published 1/16/85, effective 2/20/85]

[Filed emergency 3/8/85—published 3/27/85, effective 3/8/85]
[Filed 7/12/85, Notice 5/8/85—published 7/31/85, effective 9/4/85]
[Filed emergency 11/14/86—published 12/3/86, effective 12/3/86]
[Filed 7/29/94, Notice 5/11/94—published 8/17/94, effective 9/21/94]
[Filed 11/22/00, Notice 6/14/00—published 12/13/00, effective 1/17/01]

CHAPTER 82
WELL CONTRACTOR CERTIFICATION
[Prior to 5/12/93, see also 567—Ch 37]

567—82.1(455B) Definitions. In addition to the definitions in Iowa Code sections 455B.171, 455B.190 and 455B.190A, which are hereby adopted by reference, the following definitions shall apply to this chapter:

"Classification" means one of two levels of well contractor certification, designated as either well contractor or provisional certified well contractor. Both are referred to as certified well contractor in the following rules unless specifically identified otherwise.

"Continuing education unit (CEU)" means ten contact hours of participation in an organized education experience under responsible sponsorship, capable direction, and qualified instruction.

"Direct charge" means the certified well contractor at the well site responsible for ensuring that the well services are performed as required in 567—Chapters 38, 39, 43, 49 and 110.

"Water well" means any excavation that is drilled, cored, bored, augered, washed, driven, dug, jetted, or otherwise constructed for the purpose of exploring for groundwater, monitoring groundwater, utilizing the geothermal properties of the ground, or extracting water from or injecting water into the aquifer. "Water well" does not include an open ditch or drain tiles or an excavation made for obtaining or prospecting for oil, natural gas, minerals, or products mined or quarried.

"Well services" means new well construction, well reconstruction, installation of pitless equipment, or well plugging.

567—82.2(455B) General.

82.2(1) All well services provided on or after July 1, 1993, shall be performed by a well contractor who has been certified by the department pursuant to this chapter except that a person may construct or reconstruct a well, install pitless equipment or plug a well on the person's own property without being certified.

82.2(2) Rescinded IAB 4/14/93, effective 3/26/93.

82.2(3) A certified well contractor shall be present at the well site and in direct charge of the well services being performed or provided.

82.2(4) Any person who is responsible for providing well services shall be certified except that a person may construct or reconstruct a well, install pitless equipment or plug a well on the person's own property without being certified.

82.2(5) A currently certified well contractor may obtain a duplicate certificate upon payment of the same fee as required for renewal of a certificate.

82.2(6) Reserved.

82.2(7) Reserved.

82.2(8) Any certified well contractor who possesses a certificate must report to the department a change in address within 30 days after the change.

567—82.3(455B) Classification of well contractors.

82.3(1) Classifications. There shall be two classifications of certified well contractors:

1. Well contractor;
2. Provisional certified well contractor.

82.3(2) A certified well contractor has met the experience requirements, has successfully completed the well contractor certification test and has been issued a certificate by the department.

82.3(3) A provisional certified well contractor does not meet all the experience requirements for a certified well contractor but does meet the following requirements:

a. Signs a statement on the application form that there is a shortage of certified well contractors;

b. Completes and submits an application documenting at least one year of work experience in well services performed under the direct supervision of a certified well contractor;

c. The application includes a signature of a certified well contractor who employs the applicant for provisional certification. By signing the application, the certified well contractor certifies to be jointly liable for violations of the rules regarding well services by the provisional certified well contractor and that the violation is grounds for suspension or revocation of the certification of the certified well contractor and the provisional certified well contractor; and

d. Successfully completes the examination.

82.3(4) The provisional certified well contractor shall become a certified well contractor after the submission of an application and appropriate fees to the department showing all requirements for certification have been met. The certificate for a provisional certified well contractor will be issued for one year. The department will issue a well contractor certificate after the one-year period and receipt of appropriate fees.

567—82.4 Reserved.

567—82.5 Reserved.

567—82.6(455B) Experience requirements.

82.6(1) All applicants shall meet the experience requirements as shown below.

CLASSIFICATION	EXPERIENCE
WELL CONTRACTOR	TWO YEARS
PROVISIONAL CERTIFIED WELL CONTRACTOR	ONE YEAR

82.6(2) Rescinded IAB 4/14/93, effective 3/26/93.

567—82.7(455B) Fees.

82.7(1) The examination fee for each examination shall be $50.

82.7(2) The initial certification fee shall be $75 for each one-half year or partial one-half year from the date of issuance to June 30, 1996. After July 1, 1996, the initial certification fee shall be $75 for each one-half year of a two-year period from the date of issuance to June 30 of even-numbered years.

82.7(3) The penalty fee shall be $100. The penalty fee is for late payment of the initial certification fee or renewal fee.

82.7(4) The certification renewal fee shall be $100 for the two-year period.

567—82.8(455B) Examinations.

82.8(1) All persons wishing to take the examination required to become a certified water well contractor shall complete the Water Well Contractor Certification Examination Application, Form 43970. A listing of dates and locations of examinations is available from the department upon request. The application form requires the applicant to indicate educational background, training and past experience in providing well services. The completed application and the application fee shall be sent to the director and addressed to the department in Des Moines. Application for examination must be received by the department at least 30 days prior to the date of examination.

82.8(2) The director shall designate department personnel to evaluate all applications for examination, certification and renewal of certification. The director will review applications when it is indicated the applicant has falsified information or when questions arise concerning an applicant's qualifications of eligibility for examination or certification.

82.8(3) A properly completed application for examination will be valid for one year from the date the application is approved by the department.

82.8(4) An applicant who does not qualify for examination at the time of application will have the examination fee refunded if the applicant cannot qualify for examination within one year. If the applicant will qualify for a scheduled examination within one year, the applicant will be notified when the examination may be taken and the fee will not be refunded.

82.8(5) Upon failure of the first examination, the applicant may be reexamined at the next two scheduled examinations. Upon failure of the third examination, the applicant shall be required to wait a period of 90 days between each subsequent examination.

82.8(6) Upon each reexamination when a valid application is on file, the applicant shall submit to the department the examination fee at least ten days prior to the date of examination.

82.8(7) Failure to successfully complete the examination within one year from the date of approval of the application shall invalidate the application.

82.8(8) Completed examinations will be retained by the director for a period of one year after which they will be destroyed.

82.8(9) Oral examinations.

a. Upon written request by an applicant for certification, the director will consider the presentation of an oral examination on an individual basis when: the applicant has failed the written examination at least three times; the applicant has shown difficulty in reading or understanding written questions but may be able to respond in oral questioning; the applicant is capable of communicating in writing with regard to departmental requirements and inquiries; and the director has received a written recommendation for an oral examination from a department staff member attesting to the operational and performance capabilities of the applicant. The director shall designate department personnel to administer the examination.

b. The examination shall contain practical questions pertaining to groundwater law, well construction, well maintenance, and well abandonment.

567—82.9(455B) Certification.

82.9(1) All applicants for certification shall successfully complete and pass an examination prior to receiving certification.

82.9(2) Application for certification must be received by the department within 30 days of the date the applicant receives notification of successful completion of the examination. All applications for certification shall be made on a form provided by the department and shall be accompanied by the certification fee.

82.9(3) Applications for certification by examination which are received more than 30 days but less than 60 days after notification of successful completion of the examination shall be accompanied by the certification fee and the penalty fee. Applicants who do not apply for certification within 60 days' notice of successful completion of the examination will not be certified on the basis of that examination.

82.9(4) Applicants may appeal a denial of certification pursuant to 567—Chapter 7.

567—82.10(455B) Renewals.

82.10(1) Renewal period. All certificates shall expire on June 30 of even-numbered years and must be renewed every two years in order to maintain certification. However, the first certification period shall be for three years starting July 1, 1993, and ending June 30, 1996.

82.10(2) Application for renewal will be mailed to all certified well contractors two months prior to the expiration date of their certificates. Application for renewal must be made in accordance with this rule and the instructions on the form in order to renew the certificate for the next two years. Application for renewal of a certificate without penalty must be received by the director or postmarked prior to the expiration of the certificate, and shall be accompanied by the certification renewal fee.

82.10(3) Late application for renewal of a certificate may be made provided that such late application shall be received by the director or postmarked within 30 days of the expiration of the certificate on forms provided by the department. Such late application shall be accompanied by the penalty fee and the certification renewal fee.

82.10(4) If a certificate holder fails to renew within 30 days following expiration of the certificate, the right to renew the certificate automatically terminates. Certification may be allowed at any time following such termination provided that the applicant successfully completes an examination. The applicant must then apply for certification in accordance with rule 82.9(455B).

82.10(5) A certified well contractor may not continue to provide well services after expiration of a certificate without renewal thereof.

82.10(6) Continuing education must be earned during July 1, 1993, through March 31, 1996, for the initial certification period and must be earned during two-year periods beginning on April 1, 1996, and ending March 31 of even-numbered years thereafter. A certified well contractor must earn two units or 20 contact hours during each two-year period. Newly certified well contractors (previously uncertified) who became certified after April 1 of a two-year period will not be required to earn CEUs until the next two-year period.

82.10(7) Beginning July 1, 1994, and in succeeding even-numbered years, only those certified well contractors fulfilling the continuing education requirements before the end of each two-year period (March 31) will be allowed to renew their certificate. The certificate of certified well contractors not fulfilling the continuing education requirements shall expire on June 30 of the applicable biennium.

82.10(8) All activities for which continuing education credit will be granted must be approved by the department, college or university and shall be related to well services, relevant aspects of Iowa groundwater law, well construction, well maintenance, and well abandonment practices which protect groundwater and water supplies.

82.10(9) The director may, in individual cases involving hardship or extenuating circumstances, grant an extension of time of up to three months within which to fulfill the minimum continuing education requirements. Hardship or extenuating circumstances include documented health-related confinement or other circumstances beyond the control of the certified well contractor which prevent attendance at the required activities. All requests for extensions must be made prior to March 31 of each biennium.

82.10(10) It is the certified well contractor's responsibility to notify the department of the continuing education credit earned during the period. The continuing education credits earned during the period shall be shown on the application for renewal.

82.10(11) A certified well contractor shall be deemed to have complied with the continuing education requirements of this rule during periods that the certified well contractor serves honorably on active duty in the military services, or for periods that the certified well contractor is a resident of another state or district having a continuing education requirement for certified well contractors and meets all the requirements of that state or district for practice there, or for periods that the person is a government employee working as a well contractor and assigned to duty outside of the United States, or for other periods of active practice and absence from the state approved by the director.

567—82.11 Reserved.

567—82.12(455B) Certified well contractor obligations.

82.12(1) *Submission of records and samples.* Each certified well contractor shall submit drilling records and drill cutting samples to the Geological Survey Bureau, Department of Natural Resources, Oakdale Campus, University of Iowa, Iowa City, Iowa 52242, telephone (319)338-1575, as follows:

a. Within 30 days of completion of any water well used as part of a public water supply, a well used for withdrawal of water for which a permit is required by rule 567—50.1(455B), or wells used to monitor groundwater quantity or quality required by the department if so directed by the geological survey bureau, department of natural resources. The certified well contractor must submit the drilling records and samples required by subrules 82.12(2) and 82.12(3).

b. Within 30 days of the completion of any water well used as part of a nonpublic water supply or other water wells used to access groundwater.

c. Prior to constructing a water well to be used as part of a nonpublic water supply or other water well used to access groundwater, the certified well contractor must contact the local health department in the county in which the water well is to be located to determine if submittal of drill cutting samples is required.

82.12(2) *Drilling records and samples.* Drilling records and drilling cutting samples must be submitted in the water well driller's notebook and drill cutting sample bags provided by the geological survey bureau, department of natural resources.

82.12(3) *Water well log.* The water well driller's log shall include the following:

a. Location and legal description (quarter section, section number, township, range and county).

b. Reference point for all depth measurements.

c. Depth at which each significant change of formation occurs.

d. Depth at which pump is set, the nonpumping and pumping water levels in the well measured from the land surface and the rate and duration the well was pumped.

e. Identification of the material of which each significant stratum is composed.

f. Depth at which hole diameters (bit sizes) change.

g. Normal hole diameter of the well bore.

h. Total depth of the completed hole.

i. Depth or location of any lost drilling fluids, drilling materials, or tools.

j. Casing depth, grouting schedule including materials used and method of placement, description of the well casing and liner pipe.

k. Description of well screens including diameter, length, material slot sizes, amount of open area, and location in well.

l. Description of physical and chemical well development activities.

82.12(4) *Cutting samples.* Drilling cutting samples shall be collected at intervals of five feet and at each pronounced change in geological formation.

82.12(5) *Test pumping.* Certified well contractors shall provide the requested test pumping data for water wells used as part of a public water supply pursuant to 567—subrule 41.12(2) and for water wells utilized as part of a regulated water use pursuant to 567—subrule 50.6(1).

567—82.13(455B) Discipline of certified well contractors.

82.13(1) Disciplinary action may be taken against a certified well contractor on any of the grounds specified in Iowa Code section 455B.190A and the following more specific grounds. Iowa Code section 455B.109 authorizes the assessment of administrative penalties for violations of Iowa Code chapter 455B or rules, permits, and orders promulgated or issued pursuant to chapter 455B. The department will follow 567—Chapter 10 for assessing such penalties.

a. Knowingly making any false statement, representation, or certification on any application, record, report or document required to be maintained or submitted under any applicable permit or rule of the department.

b. Failure to renew certification.

c. Failure to obtain required continuing education units.

d. Failure to submit required records or other reports required under applicable permits or rules of the department, including failure to submit complete records or reports.

e. Failure to use reasonable care or judgment or to apply knowledge or ability in performing the duties of a certified well contractor.

f. Violation of well construction standards or other requirements contained in 567—Chapters 38, 39, 43, 49, and 110.

g. Failure to advise a person for whom well services are being provided that a hazardous or potentially hazardous condition, as defined in Iowa Code section 455B.381(2), has been encountered.

h. Knowingly causing or allowing a hazardous or potentially hazardous condition due to well construction to exist.

82.13(2) Disciplinary sanctions allowable are:

a. Revocation of a certificate.

b. Revocation or suspension of the practice of a particular aspect of the contractor's responsibility.

c. Probation under specified conditions relevant to the specific grounds for disciplinary action. Additional education or training or reexamination may be required as a condition of probation.

82.13(3) Procedure.

a. The director shall initiate disciplinary action. The commission may direct that the director investigate any alleged factual situation that may be grounds for disciplinary action under subrule 82.13(1) and report the results of the investigation to the commission.

b. A disciplinary action may be prosecuted by the director.

c. Written notice by certified mail shall be given to a certified well contractor against whom disciplinary action is being considered, at least 20 days in advance, that an informal hearing before the commission at a specific date, time and place has been scheduled for the certified well contractor, at which the commission will determine whether a formal hearing is warranted or whether informal resolution can be reached. The certified well contractor may present any relevant facts and indicate the certified well contractor's position in the matter.

d. A certified well contractor who receives notice of informal hearing shall communicate verbally or in writing or in person with the director, and efforts shall be made to clarify the respective positions of the certified well contractor and director. The staff may then come with a recommendation to the commission at the informal hearing concerning disciplinary sanction.

e. Failure to attend the informal hearing or otherwise communicate facts and position relevant to the matter by the scheduled date will be considered by the commission when determining whether a formal hearing is warranted.

f. If agreement as to appropriate disciplinary sanction, if any, can be reached with the certified well contractor and the commission concurs, a written stipulation and settlement between the department and the certified well contractor shall be entered. The stipulation and settlement shall recite the basic facts and violations alleged, any facts brought forth by the certified well contractor and the reasons for the particular sanctions imposed.

g. If the commission determines that no disciplinary action is warranted on the facts asserted, the certified well contractor shall be notified of the decision in writing.

h. If the commission determines that an opportunity for formal hearing is required to impose any disciplinary sanction specified in subrule 82.13(2), the director shall proceed in accordance with 567—Chapter 7.

567—82.14(455B,272C) Revocation of certificates. Upon revocation of a certificate in accordance with the authority provided in Iowa Code section 455B.190A, application for certification may be allowed after two years from the date of revocation. Any such applicant must successfully complete an examination and be certified in the same manner as a new applicant.

These rules are intended to implement Iowa Code sections 455B.187 and 455B.190A.

[Filed 11/20/92, Notice 9/16/92—published 12/9/92, effective 1/13/93*]

[Filed emergency 3/26/93—published 4/14/93, effective 3/26/93]

*Effective date of 567—82.1(455B), 82.2(2), 82.3(455B), and 82.6(455B) (published 12/9/92 IAB) delayed until adjournment of the 1993 General Assembly by the Administrative Rules Review Committee at its meeting held January 5, 1993.

CHAPTER 15
LAW ENFORCEMENT ADMINISTRATOR'S TELECOMMUNICATIONS ADVISORY COMMITTEE (LEATAC)
15.1(693) Establishment of committee
15.2(693) Membership of committee
15.3(693) Terms of appointment
15.4(693) Officers
15.5(693) Bylaws
15.6(693) Duties

CHAPTER 16
STATE OF IOWA BUILDING CODE
16.1(103A) Purpose
16.2(103A) When applicable
16.3(103A) Building code commissioner
16.4(103A) Building code advisory council
16.5(103A) Adoption of rules
16.6(103A) Board of review
16.7(103A) Forms and publications
16.8 to 16.109 Reserved
DIVISION I
Part 1
16.110(103A) Legislative
16.111 to 16.119 Reserved
Part 2
16.120(103A) General administration
16.121(103A) Optional alternate to adopted codes
16.122(103A) Definitions
16.123(103A) Other rules
16.124 to 16.129 Reserved
Part 3
16.130(103A) Scope
16.131(103A) Plans and specifications review
16.132(470) Life cycle cost analysis
16.133 to 16.139 Reserved
Part 4
16.140(103A) General construction rules and regulations
16.141 to 16.199 Reserved
DIVISION II
16.200(103A) Electrical rules and regulations—adoption
16.201 to 16.299 Reserved
DIVISION III
16.300(103A) Mechanical rules and regulations
16.301 to 16.399 Reserved
DIVISION IV
16.400(103A) Plumbing rules and regulations
16.401(104B) Minimum toilet facility standard
16.402(103A) Fuel gas piping
16.403 to 16.499 Reserved
DIVISION V
16.500(103A) One- and two-family dwelling rules and regulations
16.501 to 16.599 Reserved
DIVISION VI
Part 1
16.600(103A) Factory-built structures rules and regulations
16.601 to 16.609 Reserved
16.610(103A) "Modular factory-built structures"
16.611 to 16.619 Reserved
Part 2
16.620(103A) Manufactured home construction
16.621(103A) Installation of manufactured homes
16.622(103A) Installer compliance
16.623(103A) Installation seal and certificate procedures for manufactured homes
16.624 Reserved
16.625(103A) Inspections and fee structure
16.626(103A) Support and anchorage of manufactured homes
16.627(103A) Approval of existing manufactured home tie-down systems
16.628(103A) Procedure for governmental subdivisions for installation of factory-built structures
16.629(103A) Support and anchoring systems approval procedures
16.630 to 16.699 Reserved
DIVISION VII
16.700(103A) Accessibility rules and regulations for the physically handicapped
16.701(103A) Definitions
16.702(103A) Administration and enforcement
16.703(103A) General principles and considerations
16.704(103A) Site development
16.705(103A) Building elements and spaces accessible to the physically handicapped

16.706(103A) Making apartments accessible and functional for the physically handicapped
16.707 to 16.799 Reserved

DIVISION VIII
16.800(103A) Iowa state building code thermal and lighting efficiency standards
16.801(103A) Adoption of residential energy code
16.802(103A) Adoption of nonresidential energy code

CHAPTER 17
Reserved

CHAPTER 18
PARKING FOR PERSONS WITH DISABILITIES
18.1(321L) Scope
18.2(321L) Location
18.3(321L) Dimensions
18.4(321L) Access aisles and loading zones
18.5(321L) Designation
18.6(321L) Numbers of parking spaces for persons with disabilities required in off-street parking facilities
18.7(321L) Persons with disabilities parking at residential facilities
18.8(321L) On-street parking

CHAPTER 19
MISSING PERSON INFORMATION CLEARINGHOUSE
19.1(694) Missing person information clearinghouse
19.2(694) Administration of missing person information clearinghouse
19.3(694) Definitions
19.4(694) Program information
19.5(694) Forms
19.6(694) Program and material submission information
19.7(694) Submission for approval
19.8(694) Qualifications for approval
19.9(694) Program and material modification
19.10(694) Disqualification after initial approval
19.11(694) Removal from registry
19.12(694) Hearings
19.13(694) Release of information
19.14(694) Dissemination
19.15(694) Training

CHAPTER 20
GOVERNOR'S TRAFFIC SAFETY BUREAU
20.1(23 USC 402, ExecOrd 23) Authority
20.2(23 USC 402, ExecOrd 23) Purpose
20.3(23 USC 402, ExecOrd 23) Responsibilities
20.4(23 USC 402, ExecOrd 23) Funding criteria
20.5(23 USC 402, ExecOrd 23) Program requirements

CHAPTERS 21 and 22
Reserved

CHAPTER 23
CLOSED CIRCUIT VIDEOTAPE SURVEILLANCE SYSTEMS ON EXCURSION GAMBLING BOATS
23.1(99F) Definitions
23.2(99F) Minimum standards
23.3(99F) Closed circuit television
23.4(99F) Required equipment
23.5(99F) Required surveillance
23.6(99F) Equipment in DCI offices
23.7(99F) Camera lenses
23.8(99F) Lighting
23.9(99F) Surveillance room
23.10(99F) Nongambling hours
23.11(99F) Waivers from requirements

CHAPTER 24
Reserved

CHAPTER 18
PARKING FOR PERSONS WITH DISABILITIES

661—18.1(321L) Scope. These rules shall apply to all public and private parking facilities, temporary or permanent, used by the general public.

661—18.2(321L) Location. Parking spaces designated for persons with disabilities and accessible passenger loading zones that serve a particular building shall be located on the shortest possible accessible circulation route to an accessible entrance of the building. In separate parking structures or lots that do not serve a particular building, parking spaces for persons with disabilities shall be located on the shortest possible circulation route to an accessible pedestrian entrance of the parking facility. When parking spaces for persons with disabilities are required for buildings with more than one accessible entrance, the spaces shall be distributed so that each accessible entrance shall have at least one parking space for persons with disabilities located on the shortest accessible route to that entrance. EXCEPTION: If the required number of spaces is less than the number of accessible entrances, the spaces shall be distributed so that as many entrances as possible are served by at least one parking space for persons with disabilities located on the shortest accessible route to those entrances.

661—18.3(321L) Dimensions.

18.3(1) Single space. Parking spaces for persons with disabilities shall be at least 96 inches wide and shall have an adjacent access aisle 60 inches wide minimum (see Figure 1). Parking vehicle overhangs shall not reduce the clear width of an accessible circulation route. Parking spaces and access aisles shall be level with surface slopes not exceeding 1:50 in all directions.

18.3(2) Multiple spaces. Two accessible parking spaces may share a common access aisle (see Figure 1).

18.3(3) The requirements of subrules 18.3(1) and 18.3(2) do not apply to parallel on-street parking spaces.

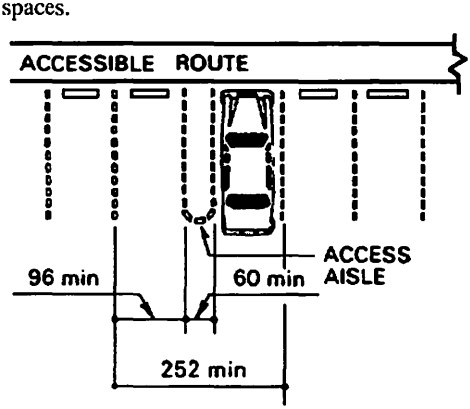

Figure 1
Dimensions of Parking Spaces

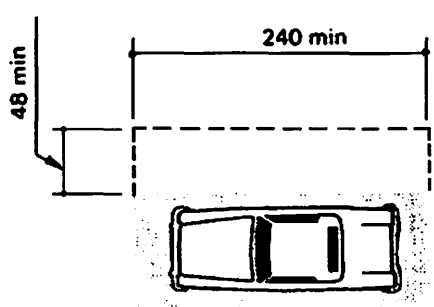

Figure 2
Access Aisle at Passenger Loading Zones

18.3(4) Van-accessible spaces. The first parking space for persons with disabilities provided in a parking lot or parking structure, and every eighth parking space for persons with disabilities provided thereafter, shall be a van-accessible space. A "van-accessible" space shall be 96 inches wide with an adjacent access aisle at least 96 inches wide (see Figure 3). Two adjacent van-accessible spaces may share a common access aisle.

EXCEPTION: Entities providing parking spaces for persons with disabilities are not required to provide van-accessible spaces if all of the parking spaces for persons with disabilities provided in a parking lot or structure are "universally accessible." A "universally accessible" space is at least 132 inches wide with an adjacent 60-inch wide access aisle. Two adjacent universally accessible spaces may share a common access aisle (see Figure 4).

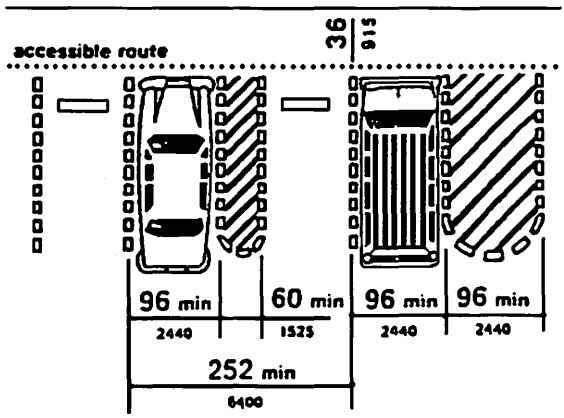

Figure 3
Van-Accessible Space at End of Row

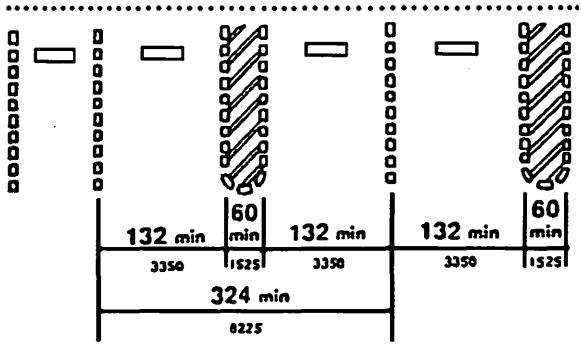

Figure 4
"Universal" Accessible Parking Spaces

661—18.4(321L) Access aisles and loading zones.

18.4(1) Passenger loading zones shall provide an access aisle at least 48 inches wide and 20 feet long adjacent and parallel to the vehicle pull-up space (see Figure 2). Vehicle standing spaces and access aisles shall be level with surface slopes not exceeding 1:50 in all directions.

NOTE: Projects which are required to comply with the Uniform Federal Accessibility Standards shall provide a width of 60 inches for the access aisle.

18.4(2) A minimum vertical clearance of 108 inches shall be provided at accessible passenger loading zones and along vehicle access routes to such areas from site entrances.

NOTE: Uniform Federal Accessibility Standard requires 114 inches of vertical clearance.

18.4(3) If there are curbs between the access aisle and the vehicle pull-up space, then a curb ramp complying with Iowa Code section 216C.9 shall be provided.

661—18.5(321L) Designation. Each parking space for persons with disabilities shall be designated as reserved for persons with disabilities by a sign meeting the following requirements established in Iowa Code section 321L.6:

18.5(1) Each persons with disabilities parking sign shall have the international symbol of accessibility in white on a blue background.

18.5(2) Each persons with disabilities parking sign shall be affixed vertically to another object so that it is readily visible to the driver of a vehicle approaching the parking space for persons with disabilities. Signs shall be mounted so that the bottom of the sign is no less than five feet nor more than seven feet from the surface level of the parking space.

EXCEPTION 1: Signs in use prior to February 1, 2001, which are readily visible to the driver of a vehicle approaching the parking space may continue to be used until replaced.

EXCEPTION 2: Signs marking parking spaces for persons with disabilities which are affixed to other approved parking signs and devices are not required to meet the minimum or maximum height requirements of this rule, provided that the signs are clearly visible to the drivers of vehicles approaching the spaces which they mark.

NOTE: The pavement in a persons with disabilities parking space may be marked with the international symbol of accessibility, but such marking does not meet the requirements of this subrule.

18.5(3) Each persons with disabilities parking sign may include language stating the amount of the fine for improperly using the persons with disabilities parking space. If a persons with disabilities parking sign includes language stating the amount of the fine, it shall reflect the current specified amount of the fine.

661—18.6(321L) Numbers of parking spaces for persons with disabilities required in off-street parking facilities.

18.6(1) At least 2 percent of the total parking spaces in any off-street nonresidential parking facility available to the public shall be designated as spaces for persons with disabilities, rounded to the nearest whole number of parking spaces for persons with disabilities. There shall be at least one parking space for persons with disabilities in any off-street nonresidential parking facility available to the public which has a total of ten or more parking spaces.

18.6(2) All off-street parking facilities on which construction is completed on or after July 1, 1991, which provide parking to the general public and which provide ten or more parking spaces, shall designate parking spaces for persons with disabilities in accordance with the following table:

Total Parking Spaces In Lot	Required Minimum Number of Parking Spaces for Persons with Disabilities
10 to 25	1
26 to 50	2
51 to 75	3
76 to 100	4
101 to 150	5
151 to 200	6
201 to 300	7
301 to 400	8
401 to 500	9
501 to 1,000	*
1,001 and over	**

*2 percent of total

**20 spaces plus 1 for each 100 over 1,000

NOTE: Projects which are required to comply with the Uniform Federal Accessibility Standards shall provide a minimum of one parking space for persons with disabilities.

661—18.7(321L) Persons with disabilities parking at residential facilities. All public and private buildings and facilities, temporary and permanent, which are residences and which provide ten or more tenant parking spaces, excluding extended health care facilities, shall designate at least one parking space for persons with disabilities as needed for each individual dwelling unit in which a person with a disability resides. Residential buildings and facilities which provide public visitor parking of ten or more spaces shall designate parking spaces for persons with disabilities in the visitors' parking area in accordance with the table contained in rule 661—18.6(321L).

661—18.8(321L) On-street parking. Provisions for parking spaces for persons with disabilities in on-street parking areas within city business districts shall be as required by Iowa Code section 321L.5.

These rules are intended to implement Iowa Code chapter 321L.

[Filed 6/22/90, Notice 1/10/90—published 7/11/90, effective 8/15/90]
[Filed emergency 7/20/90—published 8/8/90, effective 8/15/90]
[Filed 12/28/95, Notice 8/2/95—published 1/17/96, effective 3/1/96]
[Filed 11/22/00, Notice 5/17/00—published 12/13/00, effective 2/1/01]

RABBIS
Generally, see RELIGION

RABIES
Confinement, animals **21**—64.23, 64.24
Reports **21**—64.17; **641**—1.2(1)*a*(1)
Vaccination **21**—64.25, 64.34(6), 64.35(3), 65.10, 67.3(3)*d*

RACING AND GAMING
See also GAMBLING
Administration **491**—1.3
Admissions **491**—5.4(10)
Appeals **491**—4.6, 4.7(2,3), 4.8, 6.16(2), 9.3(2)*b*(3), 9.4(21)*f*, 10.5(2)*v*(3)
Audits **491**—5.2, 11.12(8,11)
Boards **491**—4.5–4.8, 6.2(2)
Bribery **491**—6.5(3)
Checks, personal **491**—5.4(9)
Commission
  Address **491**—1.2(1)
  Approvals **491**—1.5(6), 1.6(3), 5.4(8), 5.5(3)
  Contested cases, *see Hearings this subheading below*
  Declaratory orders **491**—2.20–2.31
  Hearings **491**—1.8(4,8), ch 4, 6.5(2)
  Jurisdiction **491**—1.1, 4.8
  Meetings **491**—1.2(3), 2.2, 4.6
  Organization **491**—ch 1
  Records
    See also Mutuel Departments below
    Generally, public/fair information **491**—ch 3
    Address **491**—3.3(1)
    Confidentiality **491**—3.9(2), 3.10–3.12, 3.13(2)
    Data processing **491**—3.14(1)
    Definitions **491**—3.1, 3.10
    Disclosure **491**—3.9–3.11
    Greyhound racing, *see Employees/Licensees below; Greyhound: Officials below*
    Harness racing, *see Employees/Licensees below; Harness: Officials below*
    Open **491**—1.4, 3.9(1), 3.13(1), 8.2(2)
    Personally identifiable information **491**—3.14

RACING AND GAMING (cont'd)
Commission
Records

Riverboats, *see Gaming, Boats/Racetracks below*
Thoroughbred racing, *see Employees/Licensees below; Thoroughbred/Quarter Horse: Officials below*

Rule making **491**—ch 1, 2.1–2.19

Contracts **491**—5.4(8), 6.16(3), 8.4(2), 9.5(3), 10.5(2)*s*, 10.7(3)
Criminal investigation, *see Employees/Licensees: Investigation/Inspection below*
Definitions **491**—3.1, 4.1, 6.1, 7.1, 8.1, 9.1, 9.4(14), 10.1, 11.1, 12.1
Disciplinary actions, *see Violations below*
Ejections/exclusions **491**—4.4(5), 4.8, 5.4(5)*d*
Employees/licensees
See also specific race subheading Officials
Chemists **491**—7.14, 9.5(3), 10.7(3)
Drugs/alcohol **491**—6.2(1)*c*, 6.4(3), 6.5(1)*d,f,i*, 6.5(3)*j,p*, 6.27, 9.2(3)*f*, 10.4(2)*g*
Fraud/misconduct **491**—6.5(1,3), *see also specific race subheading Fraud*
Identification **491**—6.4(1)
Investigation/inspection **491**—1.7(11), 6.2(1)*d,f,j*, 6.2(2), 6.4(3), 7.3(2)*j*, 11.13(3)*a,b*, 11.13(8); **661**—1.2(6), *see also specific race subheading Complaints*
License, *see specific race subheading Licenses; Licensure below*
Ownership **491**—11.13(3)*a,g,j*, *see also Disclosure above*
Records **491**—5.4(13,14), 11.13(6), 12.2, *see also Gaming, Boats/Racetracks: Games below; specific race subheading Officials below*
Reports
See also Gaming, Boats/Racetracks: Games below; specific race subheading Officials
Annual, *see Audits above*
Discharges **491**—6.10
Ejections/exclusions **491**—5.4(5)*d*

Facilities/equipment **491**—1.6(3), 5.4(1–4), 5.5, *see also Gaming,Boats/Racetracks below; specific race below*
Firearms, possession **491**—5.4(6)
Gamblers, treatment program **491**—5.4(12); **641**—ch 162
Gaming, boats/racetracks
Administration **491**—12.3
Admissions **491**—5.4(5)*d*, 5.4(10)
Capacity **491**—5.6(1)
Cashiers' cage **491**—12.4
Counties, elections **721**—21.820
Count room **491**—12.17, 12.18

Devices, distribution **491**—11.4, 11.13
Disclosure **491**—11.13(3)*a,i,j*
Excursions, time period **491**—5.6
Games
See also GAMBLING: Social
Approval **491**—1.6(3), 11.3, 11.4
Keno **491**—11.8
Prizes **491**—11.6, *see also Slot Machines: Payouts this subheading below*
Slot machines
Containers **491**—12.16, 12.18
Counting/recording **491**—12.15, 12.18
Hardware/software **491**—11.10
Hopper **491**—11.11, 12.11–12.13
Keys **491**—12.11
Malfunction **491**—11.10(3)
Monitoring **491**—12.15
Multilink systems **491**—11.12(7,8)
Payouts **491**—11.9, 11.12(8)*i,n*, 12.12, 12.14
Progressive **491**—11.12
Records/reports **491**—11.9(1), 11.12(5), 11.12(8)*j,k*, 11.12(8)*n*(11), 12.12, 12.15, 12.18(5,6)
Specifications **491**—11.11
Types **491**—11.5(2)
Winnings, taxation **701**—46.1(1)*g*
Table
Authorization **491**—11.5
Bacccarat **491**—11.5(1)
Cash bets **491**—12.6
Closing/opening **491**—12.10
Containers **491**—12.5, 12.6(3), 12.16, 12.18
Craps **491**—11.5(1), 11.7(3)
Gambling aids **491**—11.2(3)
Gaming chips **491**—12.7–12.10
Poker **491**—11.5(1), 11.7(7)
Records/reports **491**—12.18(5)*d,h*

RACING AND GAMING (cont'd)
Gaming, boats/racetracks
Games
Table
Red dog **491**—11.5(1), 11.7(8)
Roulette **491**—11.5(1), 11.7(5,6)
Twenty-one **491**—11.5(1), 11.7(4)

Tournaments/contests **491**—11.6
Video **491**—11.5(2)
Wagers **491**—11.2(4), 11.4(3), 11.5(3), 11.6(2), 11.7(2–4,7), 11.8(3,8)

Licenses, *see Licensure below*
Prohibitions **491**—11.2(2,3)
Records, *see Slot Machines this subheading above; Table this subheading above; Employees/Licensees above*
Security **491**—1.7(4), 5.4(5), 12.5(2), 12.9, 12.13, 12.14, 12.16, 12.17
Surveillance **491**—5.4(7), 11.12(8)*e*, 12.17, 12.18(4); **661**—ch 23
Taxation **491**—1.7(2), 5.4(10,11), 11.6(2), 11.7(7)*a*, 11.12(8)*l*, 11.12(8)*n*(9); **701**—17.25, 46.1(1)*g*, 107.12
Violations **491**—11.13(7), *see also Licensure: Suspension/Revocation/Denial below; Violations below*

Greyhound
Generally **491**—ch 7
Admissions **491**—7.2(10)
Breeders, *see Registration this subheading below*
Complaints **491**—7.3(2)*i*
Definitions **21**—62.1; **491**—7.1
Disclosure **491**—6.15, 6.17(3), 7.3(6)*b*, 7.5(2)*e*
Drugs/alcohol
Chemists **491**—7.14(1,3)
Employees/licensees, *see Employees/Licensees above*
Prohibitions **491**—7.14(1)
Veterinarians **491**—7.3(3)*f,g*, 7.14

Employees/licensees, *see Employees/Licensees above*
Facilities **491**—7.2, 7.5(2), *see also Tracks below*
Fines **491**—7.8(4)*c*, *see also Licensure below*
Fraud **491**—7.7(10), *see also Employees/Licensees above*
Inspections **491**—6.4(3), 7.3(2)*j*
Lead-outs **491**—7.4, 7.9(10)

Licenses
See also Licensure below
Kennels **491**—6.17
Owners/trainers **491**—6.2(1)*p*, 6.16
Suspension/revocation **491**—7.8(4)*c*, 7.12(15)

Lures/baits **491**—7.3(10), 7.12(8,14)
Officials
Generally **491**—4.3, 7.3(1)
Brakeman **491**—7.3(11)
Chart writer **491**—7.3(7)
Clerk of scales **491**—7.3(9)
Director of racing **491**—7.3(4)
Kennel master **491**—7.3(15)
Lure operator **491**—7.3(10)
Mutuel manager **491**—7.3(5)
Paddock judge **491**—7.3(8), 7.9(10)
Patrol judge **491**—7.3(14)
Photo finish operator/timer **491**—7.3(12)
Records **491**—7.3(6), 7.14(4)*c*
Reports **491**—7.2(3)*b*, 7.3(3)*g*, 7.3(5,8–10,13), 7.4(9), 7.14(4)*d*, *see also Reports this subheading below*
Secretary **491**—7.3(6), 7.6(5,7), 7.8
Starter **491**—7.3(13)
Stewards **491**—4.6, 4.7, 7.2(3), 7.3(1)*a*, 7.3(2), 7.9, 7.11, 7.12, 7.14(3)*h*, 8.2(13)*g*, 8.2(23), 8.3(12)*h*
Vacancies **491**—7.2(3)
Veterinarian **491**—7.3(1,3), 7.6(7), 7.14, *see also Licensure below*
Violations **491**—7.3(8)*j*, 7.14(1)

Owners
Corporations **491**—6.17(2), 6.20
Disclosure, *see Disclosure this subheading above*
Entry requirements **491**—7.7
Fees, nonpayment **491**—6.5(2)*c*
License, *see Licenses above*
Partnerships **491**—5.4(13)*a*(2), 6.19
Records **491**—5.4(13)

RACING AND GAMING (cont'd)
Greyhound
Owners

Restrictions **491**—7.3(1)*c*, 7.4(1), 7.14(4)
Sale/transfer, greyhounds **491**—7.3(1)*c*

Penalties **491**—7.7(10), *see also Licenses this subheading above; Suspensions this subheading below*
Purse **491**—1.7(13), 4.7, 6.16(5)*d*
Races
Dead heats **491**—7.1, 7.12(1)
Declarations **491**—7.8
Entries **491**—7.3(6)*d*, 7.3(7), 7.7
Equipment **491**—7.2(2), 7.3(12), *see also Tracks below*
Interferences **491**—7.12(3,13), 7.13
Maiden **491**—7.13
Objections **491**—7.3(2)*i*
Photo finish **491**—5.5(3), 7.3(2)*m*, 7.3(12)
Qualifying **491**—7.10
Running **491**—7.12
Schooling **491**—7.4(2), 7.11, *see also Schooling below*
Scratches **491**—7.8
Simulcast, *see Simulcasts below*
Timing **491**—5.5(4), 7.3(12)
Wagers **491**—7.3(2)*l*, 7.4(8), 7.14(4), *see also Mutuel Departments below*

Records, *see Employees/Licensees above; Officials this subheading above*
Registration **21**—1.6(4), 62.1, 62.2, 62.3(2), 62.40, 62.41, 62.43, 62.44; **491**—6.17, 7.3(6)*e*, 7.5(2)*e*, 7.6
Reports **491**—7.14(3)*g,h*, *see also Officials this subheading above*
Sales/leases **491**—7.6(3–6)
Schooling **491**—7.3(2)*n*, 7.6, 7.8(5), 7.9(8), 7.11
Security **491**—7.2(4)*b*, 7.3(6)*b*, 7.3(15), 7.14(2)*d*, *see also Security below*
Stewards, *see Officials this subheading above*
Suspensions **491**—7.8(4)*b,c*, 7.8(5), 7.12(15)
Tracks, *see Tracks below*
Trainers **491**—7.5, *see also Licenses this subheading above*
Vaccination **491**—7.6(7)
Violations **491**—7.5(1), 7.8(4), *see also Licenses: Suspension/Revocation this subheading above; Officials this subheading above; Violations below*
Weight **491**—7.3(9), 7.8(5), 7.9, 7.11(3,6)

Harness
Coggins test **491**—9.2(7)*g*, 9.3(1)*a*(9), 9.4(1)*j*
Complaints **491**—9.2(6)*d*, 9.4(20)*b*

Definitions **491**—9.1, 9.4(14)
Disclosure **491**—6.15, 6.17(3), 9.2(7)*l*, 9.3(1)*a*(6)
Drivers, *see Races this subheading below*
Drugs/alcohol
  Chemists **491**—9.5(3)
  Employees/licensees, *see Employees/Licensees above*
  Prohibition, horses **491**—9.5(1)
  Veterinarians **491**—9.2(15), 9.5(2,3)
Employees/licensees, *see Employees/Licensees above; Officials this subheading below*
Facilities **491**—9.3(1)*a*(3), 9.5(2)*b*, *see also Tracks below*
Fines **491**—9.2(6)*a*(6), 9.2(6)*b*(8,14), 9.4(2)*e,f*, 9.4(20)*e,f*, 9.4(26)*c*, *see also Licensure below*
Fraud **491**—9.2(6)*d*(6), 9.4(15)*r*, 9.4(20)*e,n*, 9.4(22)*f*, *see also Employees/Licensees above*
Goading device **491**—9.4(20)*j*
Inspections **491**—6.4(3), 9.2(6)*b*(13)
Leases **491**—6.18
Licenses
  Driver eligibility **491**—6.25
  Suspension/revocation **491**—9.2(6)*b*(14), 9.3(2)*b*, 9.4(20)*e,f*, 9.4(26)*c*, *see also Licensure below*
  Trainers **491**—6.2(1)*p*, 6.16(5)*e*
Officials
  Generally **491**—4.3, 9.2
  Appointment **491**—9.2(5)
  Charter **491**—9.2(17)
  Clerk of course **491**—9.2(10)
  Eligibility **491**—9.2(2)
  Horse identifier **491**—9.2(9)
  Judges
    Paddock **491**—9.2(8)
    Patrol **491**—9.2(13)
    Placing **491**—9.2(14)
  Prohibitions **491**—9.2(3), 9.5(4)
  Records **491**—9.2(7)*d*, 9.2(12)*b*, 9.4(22), 9.4(25)*a*(1)
  Reports **491**—9.2(4), 9.2(6)*b*(14), 9.2(6)*d*(6), 9.2(8,9,11,13,16), 9.5(4)*c,d*, *see also Reports this subheading below*
  Secretary **491**—9.2(7), 9.3(1)*a*(6)
  Starter **491**—9.2(11), 9.4(19)

RACING AND GAMING (cont'd)
Harness
Officials

Stewards **491**—ch 4, 8.2(13)*g*, 8.2(23), 8.3(12)*h*, 9.2(6), 9.2(14)*c*, 9.4(15)*q,r*, 9.4(17)*c*(4), 9.4(18,23)
Timer **491**—9.2(12), 9.4(22)
Veterinarians **491**—9.2(15), 9.5, *see also Licensure below*
Violations **491**—9.2(4), 9.2(6)*a*(5,6), 9.2(6)*b*(14), 9.2(9,11,13,16), *see also Violations below*

Owners
Disclosure, *see Disclosure this subheading above*
Fees, nonpayment **491**—6.5(2)*c*
License, *see Licensure below*
Partnerships **491**—5.4(13)*a*(2), 6.19
Records **491**—5.4(13)
Sale/transfer, horses **491**—6.18(4), 9.2(3)*b*, 9.2(15)*c*, 9.3(1)*a*(10)

Penalties, *see Fines this subheading above; Licenses: Suspension/Revocation this subheading above*
Purse **491**—1.7(13), 4.7, 6.16(5)*d*, 9.2(6)*b*(14), 9.2(7)*a*, 9.4(10), 9.4(21)*f*, 9.4(26)*a*
Races
Cancellation **491**—9.2(7)*f*
Claims **491**—9.4(15)
Dead heats **491**—9.1, 9.4(19)*f*, 9.4(22)*d*
Declarations **491**—9.2(7)*h,j*, 9.4(11), 9.4(15)*b,c*, 9.4(18)*b,f,g*
Drivers **491**—6.25, 9.2(6)*d*(3), 9.3(2), 9.4(18)*g*, 9.4(20,21)
Eligibility **491**—9.2(7)*b*, 9.4(1,3–7,10,11), 9.4(15)*q*, 9.4(18)*d*
Entries **491**—9.2(6)*d*(5), 9.2(7)*c*, 9.4(5,16,17), 9.4(18)*c*, 9.4(24)
Equipment **491**—9.2(8)*a*, 9.4(20)*i,j,l*, 9.4(25)*b*, *see also Tracks below*
Overnight events **491**—9.4(9), 9.4(12)*c*, 9.4(17)*a,d*, 9.4(18)*b*, 9.4(18)*e*(1)
Paddock requirements **491**—9.4(25)
Photo finish **491**—5.5(3), 9.4(18)*b*(1), 9.4(22)*c*
Posting **491**—9.4(9,10,12)
Protests **491**—9.2(6)*d*(6), 9.4(21)
Qualifying **491**—9.4(13), 9.4(17)*e*, 9.4(18)*b*
Scratches **491**—9.4(15)*l*, 9.4(18)*f,g*
Simulcast, *see Simulcasts below*
Substitute/divided **491**—9.4(12)
Sulkies **491**—9.4(20)*u*
Timing **491**—5.5(4), 9.2(12), 9.4(22)
Track rules **491**—9.4(20)
Wagers **491**—9.3(2)*d*, 9.4(18)*c*, 9.5(4)*a*, *see also Mutuel Departments below*

Records, *see Employees/Licensees this subheading above; Officials this subheading above*
Registrations **21**—1.6(4), ch 62; **491**—6.17, 9.2(7)*l*, 9.3(1)*a*(5,6), 9.4(2), 9.4(15)*q*, *see also HORSES*
Reports **491**—9.4(20)*b*, 9.5(3)*f,g*, *see also Officials this subheading above*
Security **491**—9.3(1)*a*(5), 9.5(2)*e*, *see also Security below*
Stewards, *see Officials this subheading above*
Tracks, *see Tracks below*
Trainers **491**—9.3(1), 9.4(26)*c*, 9.5(2)*h*, *see also Licensure below*
Violations **491**—9.4(20), *see also Licenses: Suspension/Revocation this subheading above; Officials this subheading above; Violations below*

Hearings, *see Commission above*
Licensure
See also specific race
Applications, *generally* **491**—1.5, 1.8(4), 4.13, 4.17, chs 5, 6, 11.13(3,5)
Corporations **491**—6.17(2), 6.20
Criteria **491**—1.7
Denial, *see Suspension/Revocation/Denial this subheading below*
Driver, *see Harness above*
Economic/demographic data **491**—11.13(1)
Fees **491**—6.2(1)*e–g*, 6.11(5), 6.12(5), 6.20(8), 11.13(3)*c*
Fines, applicants/licensees **491**—4.7, 6.5(1)*n*, 6.7, *see also specific race*
Investigation, background **491**—1.7, 6.2(1)*d,f,j*, 6.2(2)
Jockeys/agents, *see Thoroughbred/Quarter Horse below*
Manufacturers/distributors **491**—1.5(7), 11.13(3)
Minors **491**—6.16(3)
Multiple **491**—6.2(3)
Number granted **491**—1.6(1)
Occupational **491**—1.5(5), 4.4, 6.2, 6.4(1), 6.9
Owners **491**—6.2(3)*b*(2), 6.16
Partnerships **491**—6.19
Probationary **491**—6.7
Renewal **491**—1.5(24), 1.7, 6.2(1)*g*, 6.11(5), 6.12(5)
Substitutes, licensee **491**—6.14
Suspension/revocation/denial **491**—4.4–4.7, 6.2(1)*k,l*, 6.3, 6.5–6.7, 6.11, 6.14, 6.16(5)*c*, 6.19(2)*b*, 6.27, 11.2(1), 11.13(3)*h*, 11.13(4,7), *see also Gaming, Boats/Racetracks above; specific race*

Temporary **491**—6.16(5), 11.13(4)
Trainers **491**—6.16(5)*e*, *see also specific race*
Validity **491**—6.8, 11.13(4)
Vendors **491**—6.13
Veterinarians **491**—6.26
Viability **491**—1.7(3)

Meetings, *see Commission above*
Mutuel departments
Generally **491**—ch 8
Definitions **491**—8.1
Emergencies **491**—8.2(22)
Mutuel field/coupled entry **491**—8.2(12), 8.3(10)*b*, 8.3(12)*g*, 8.3(14)*b*, 8.3(15)*g*, 8.3(16)*g*, 8.3(17)*g*
Supervisor **491**—8.2(23)
Ticket sales/payoffs **491**—8.2(3–7,15,19,20), *see also Wagering, Pari-Mutuel: Pools: Calculation/Distribution this subheading below*
Wagering, pari-mutuel
Betting, explanation **491**—8.2(8)
Elections, county **721**—21.820(4)
Interstate common-pool **491**—8.5
Jockeys **491**—10.5(2)*b*
Minimums **491**—8.2(20)
Pools
Approval **491**—8.2(14)
Calculation/distribution **491**—8.2(12), 8.3
Double **491**—8.1, 8.3(5)
Exacta **491**—8.1, 8.2(13)*f*, 8.3(11)
Interstate, common **491**—8.5
Minus **491**—8.1, 8.2(20)
Odds/payoffs, posting **491**—8.2(9)
Pick (n) **491**—8.1, 8.3(7)
Pick three **491**—8.1, 8.3(6)
Place **491**—8.1, 8.3(3)
Place pick (n) **491**—8.1, 8.3(8)

RACING AND GAMING (cont'd)
Mutuel departments
Wagering, pari-mutuel
Pools
Quinella/double quinella/twin quinella **491**—8.1, 8.2(13)*d,e*, 8.3(9,14)
Show **491**—8.1, 8.3(4)
Superfecta/tri-superfecta/twin superfecta **491**—8.1, 8.2(13)*h,k*, 8.2(20), 8.3(13,16,17)
Trifecta/twin trifecta **491**—8.1, 8.2(13)*g,j*, 8.2(20), 8.3(12,15)
Win **491**—8.1, 8.3(2)
Prohibitions **491**—6.5(3)*s,t*, 7.4(8), 7.14(4)*a*(2), 8.2(13,21), 10.4(17)*c*, 10.7(4)*a*(2)
Records/reports **491**—8.2(2,16–18,22)
Refunds **491**—7.12, 8.2(10,11)
Simulcasts **491**—8.1, 8.4
Totalizator **491**—5.5(2), 8.1, 8.2(1,4,19)
Trainers **491**—6.5(3)*t*, 10.5(1)*b*
Winnings, taxation **701**—46.1(1)*f*
Penalties, *generally* **491**—4.7, *see also specific race*
Riverboat gaming, *see Gaming, Boats/Racetracks above*
Security **491**—1.7(4), 5.4(5), *see also Gaming, Boats/Racetracks above; specific race*
Simulcasts **491**—8.1, 8.4
Stewards, *see specific race subheading Officials*
Taxation **491**—5.4(10,11), *see also Gaming, Boats/Racetracks above*
Thoroughbred/quarter horse
Bleeder's list, reciprocity **491**—10.7(1)*g*
Breeders, *see Registrations this subheading below*
Certificates, *see Jockeys this subheading below*
Complaints **491**—10.4(4)*d*(4)
Definitions **491**—10.1
Disclosure **491**—6.15, 6.17(3), 10.4(5)*l*, 10.5(1)*a*(8)
Disease test, equine infectious anemia (EIA) **491**—10.6(16)
Drugs/alcohol
Chemists **491**—10.7(3)
Employees/licensees **491**—10.4(2)*g*, *see also Employees/Licensees above*
Lasix **491**—10.4(17)*h*, 10.7(1)*g*
Prohibition, horses **491**—10.5(1)*a*, 10.5(2)*j*(6), 10.7(1)
Reports **491**—10.5(1)*a*(19), 10.7(4)*c*
Samples **491**—10.5(1)*a*(27), 10.7(2,3)

Employees/licensees, *see Employees/Licensees above; Officials this subheading below*
Facilities **491**—10.2, 10.5(1)*a*(4), 10.7(2)*b*, *see also Tracks below*
Fines **491**—10.4(4)*b*(5), *see also Licensure above*
Fire safety **491**—10.2(4)
Fraud **491**—10.4(4)*d*(4), 10.5(2)*v*(1)
Inspections **491**—6.4(3), 10.4(5)
Jockeys
  Agents **491**—6.2(3)*b*, 6.24, 10.5(2)*a*(3–5), 10.5(2)*s*(3), 10.5(3)
  Apprentices **491**—6.23, 10.5(2)*i,s*
  Conduct **491**—10.5(2)*j*
  Contracts **491**—10.5(2)*s*
  Custodian **491**—10.4(1)*j*, 10.4(11)
  Eligibility **491**—6.23
  Fees **491**— 6.5(2)*c*, 10.5(2)*d*
  Fines/forfeitures **491**—10.5(2)*t*
  Foreign **491**—6.23(3)
  Licenses, *see Licenses this subheading below*
  Prohibitions **491**—10.5(2)*c,j*, 10.5(3)*b*
  Responsibility **491**—10.5(2)*k,l*
  Riding interference **491**—10.5(2)*m*
  Selection **491**—10.5(2)*u*
  Suspensions **491**—10.5(2)*v*
  Wagers **491**—10.5(2)*b*
  Weight **491**—6.23(2)*d*, 10.5(2)*q,r*, 10.6(2)*e,g,h*
Leases **491**—6.18
Licenses
  See also Licensure above
  Agents **491**—6.2(3)*b*, 6.24, 10.5(3)*a*(1)
  Jockeys **491**—6.2(1)*p*, 6.23
  Suspension/revocation **491**—6.16(5)*c*, 10.4(4)*b*(5), 10.5(1)*a*(28), 10.5(2)*v*
  Trainers **491**—6.2(1)*p*, 6.16(5)*e*, 10.5(1)*a*(28), 10.5(1)*c*
Officials
  Generally **491**—4.3, 10.4(1)
  Bookkeeper, horsemen's **491**—10.4(4)*d*(4)"4"
  Clocker **491**—10.4(9)*b*
  Handicapper **491**—10.4(5)*g*

RACING AND GAMING (cont'd)
Thoroughbred/quarter horse
Officials

Horse identifier **491**—10.4(7)
Investigations/decisions **491**—10.4(4)*d*
Jockey custodian **491**—10.4(1)*j*, 10.4(11)
Judges
Paddock **491**—10.4(6)
Patrol **491**—10.4(16)
Placing **491**—10.4(10)
Outriders **491**—10.4(1)*m*, 10.4(14)
Prohibitions **491**—6.2(3), 10.4(2), 10.7(4)
Records **491**—10.4(4)*d*(4), 10.4(5)*d,e*, 10.4(6)*a*(2), 10.4(9)*a*(5), 10.4(13)*e,f*, 10.4(15), 10.5(2)*b*(3), 10.5(3)*a*(4)
Reports **491**—10.4(4)*c*, 10.4(4)*d*(1,4), 10.4(5)*k*, 10.4(6)*a*(2,6), 10.4(7)*e*, 10.4(11)*g*, 10.4(12), 10.4(13)*c*, 10.4(14)*b*(6,8), 10.4(16), 10.4(17)*d,j*, 10.7(4)*c–e*, *see also Reports this subheading below*
Scales clerk **491**—10.4(13)
Secretary **491**—10.4(5)
Starter **491**—10.4(8)
Stewards **491**—ch 4, 8.2(13)*g*, 8.2(23), 8.3(12)*h*, 10.1, 10.4(4,16), 10.5(1)*a*(28), 10.5(1)*c*(2), 10.6(2)*c*(3), 10.6(5)*f*, 10.6(8–10)
Substitutes **491**—10.4(4)*c*
Timer **491**—10.4(9)*a*
Veterinarians **491**—10.4(17), 10.7, *see also Licensure above*
Violations **491**—10.4(4)*a*(5), 10.6(5)*f*, 10.7(1)

Owners
Definition **491**—10.6(2)*c*(1)
Disclosure, *see Disclosure this subheading above*
Entries, *see Races this subheading below*
Fees, nonpayment **491**—6.5(2)*c*
License, *see Licensure above*
Partnerships **491**—5.4(13)*a*(2), 6.19, 10.6(5)*b*
Records **491**—5.4(13)
Sale/transfer **491**—6.18(4)

Purse **491**—1.7(13), 4.7, 6.16(5)*d*, 10.4(5)*a*, 10.4(15)*d,e*, 10.6(3)*c*, 10.6(12–15)
Races
Cancellation **491**—10.4(5)*j*
Claims **491**—10.6(18)
Dead heats **491**—10.4(10)*c*, 10.5(2)*h*(5), 10.6(13)
Eligibility **491**—10.6(1,6,9)
Entries **491**—10.1, 10.4(4)*d*(3)"2," 10.4(5)*c*, 10.6(2–5,11)
Equipment **491**—10.5(2)*q,r*, 10.6(10), *see also Tracks below*
Photo finish **491**—5.5(3), 10.4(10)*b*
Scratches **491**—10.6(3)*c*, 10.6(8)
Simulcast, *see Simulcasts above*
Timing **491**—5.5(4), 10.4(9)
Track rules **491**—10.6(17)
Wagers, *see Mutuel Departments above*
Winnings, computation **491**—10.4(5)*i*

Records, *see Employees/Licensees above; Officials this subheading above*
Registrations
Iowa-foaled **21**—1.6(4), ch 62; **491**—10.4(5)*l*, 10.4(7), 10.5(1)*a*(15), 10.6(1)*a,b*, 10.6(2)*i,k*, *see also HORSES*
Stables **491**—6.17

Reports **491**—10.7(3)*f,g*, *see also Officials this subheading above*
Security **491**—10.4(13)*d*, 10.5(2)*j*(3), 10.7(2), *see also Gaming, Boats/Racetracks above; Security above*
Stewards, *see Officials this subheading above*
Tracks, *see Tracks below*
Trainers **491**—10.4(5)*f*, 10.5(1), 10.6(16), 10.7(2)*d,g*, *see also Licenses this subheading above*
Violations **491**—10.4(4)*b*, 10.4(7)*e*, 10.5(1)*a*(3), *see also Licenses: Suspension/Revocation this subheading above; Officials this subheading above; Violations below*

Tracks
See also specific race subheading Facilities
Cameras, photo finish **491**—5.5(3)
Licenses, *see Licensure above*
Lighting **491**—5.5(6)
Limitations **491**—1.6
Maintenance **491**—5.5(1)
Sales, facilities **491**—1.6(2)
Scales **491**—5.5(5)
Scoring equipment **491**—5.5(2)
Timing devices **491**—5.5(4)

Veterinarians, *see specific race subheading Officials*
Violations **491**—4.5–4.9, 5.4(5)*d*, 6.7, 6.18(3), 6.27, *see also Gaming, Boats/Racetracks above; specific race*
Wagering, *see Mutuel Departments above*
Waivers/variances **491**—1.8

RADIATION MACHINES AND RADIOACTIVE MATERIALS

See also X-RAYS

Accidents **567**—131.2; **641**—40.15(2), 40.86, 45.2(4), 45.6(16)*f,g*

Address **641**—38.7

Airborne **641**—38.2, 40.17, 40.18, 40.48–40.50, ch 40 Appendix B, 41.2(35), 41.3(11)*e*, 41.3(12), *see also Respirators below*

Alarms **641**—40.42(1)*b*, 40.44(2)*b,c,f*, 45.1(9)*b*

Bioassays **641**—38.2, 40.50(1)*c*, 40.82(2)*c*

Brachytherapy, *see Healing Arts below*

Caution signs/labels/signals **567**—132.1; **641**—39.4(22)*d*(3), 39.4(22)*g*(5), 39.4(22)*i*(4), 39.4(22)*j*(2), 39.4(29)*b*(1)"3," 39.4(29)*b*(2)"3,4," 39.4(29)*d*(1)"3," 39.4(29)*h*, 39.4(29)*j*(3,4), 39.4(29)*k*(3,4), 39.4(29)*l*(3), 40.60–40.63, 40.70(1), ch 40 Appendixes D "II, III," E "III," 41.2(23,25,39), 46.5(1,2); **657**—16.3(7,8), *see also Industrial Radiography below; X-RAYS*

Contamination, *see Exposure below*

Decommissioning **641**—39.4(26), 40.28, 40.30(4), 40.31(1)*d*, ch 39 Appendixes H–J, ch 40 Appendix F

Definitions **641**—38.2, 39.2, 40.2, ch 40 Appendix D, 41.2(2), 41.3(2), 41.6(1), 41.7(1), 42.1(2), 43.2, 44.2, 45.1(2), 45.5(2), 45.6(3), 46.2, 203.2(2); **875**—32.8(5)

Drugs **657**—ch 16, *see also Healing Arts: Radiopharmaceuticals below; PHARMACISTS AND PHARMACY: Nuclear*

Emergencies **641**—ch 39 Appendix G, 40.50(3), 45.6(16), ch 45 Appendix D

Exemptions **641**—38.3, ch 39 Appendixes A, B, 40.3(2), 40.42(5–7), 40.43(2), 40.62, 40.64, 40.65(6), 40.74, 40.96(5), 45.1(3), 45.2(6), 45.6(9)*e*, 46.3, *see also Licenses below; Registration below; Transportation/Packaging below; X-RAYS*

Exposure

See also Personnel below

Defined **641**—38.2, 38.4(4)

Devices **641**—45.3

Occupational, *see Personnel below*

Planned, special **641**—40.2, 40.19, 40.20, 40.85, 40.86, 40.96(5), 40.98

Prohibition **641**—41.3(9)

Public **641**—40.26, 40.27, 40.87, 40.96

X-rays, *see X-RAYS*

Federal standards
See also X-RAYS
Bureau of Standards **875**—32.8(5)
Code of Federal Regulations (CFR)
Effective date **641**—40.1(5)
Environmental protection **641**—40.26(4)
Licenses **641**—39.4(21)*e*(4)"5," 39.4(22)*d,e*, 39.4(22)*g*(4), 39.4(22)*j*, 39.4(29)*c*, 39.4(29)*d*(4)"4," 39.4(29)*e,f,i*, 39.4(29)*m*(4)"6"
Performance, equipment **641**—41.1(3)*e*, 45.3(4)
Reciprocity **641**—38.8(8)*b*
Sale/transfer **641**—39.3(9)
Food, Drug, and Cosmetic Act **641**—39.4(22)*d,i*, 39.4(29)*j,k*
Industrial radiography **641**—45.1(5)*b*, 45.1(10)*g*(1), 45.2(3), 45.3(4)*c,f*, 45.3(5), 45.5(5)*d*, 45.6(9), 45.6(12)*c*, 45.6(14)
Nuclear Regulatory Commission, U.S.
Agreements **641**—38.1, 38.2, 175.13(2)*e*
Exemptions **641**—38.3(2), 39.4(28)
Licenses **641**—39.4(2)*c*(5)"1," 39.4(3)*a,b*, 39.4(3)*c*(2–4), 39.4(21)*e*(2), 39.4(21)*e*(4)"3,5," 39.4(22)*a,d,e,g,i,j*, 39.4(28), 39.4(29)*b,d*, 39.4(29)*h*(4), 39.4(29)*j–m*, 39.4(37,41,90), 41.2(12,18,20,50), 41.2(58)*f*, 41.2(66), 45.1(5)*b*, 45.5(5)*d*
Sealed sources **641**—40.32(1,3), 41.2(20,21,50), 45.3(5), 45.6(9,14)
Public Health Service Act **641**—39.4(29)*j,k*
Transportation Department, packages/labels **641**—40.64(4)
Fees **641**—38.8, 38.9
Forms **641**—39.4(21)*e*(3,4), 39.4(22)*i*(2,5), 39.4(29)*m*(4), 40.19, 40.82(3), 40.84(2), 40.85(3), 40.86(3,6), 40.100(2), 45.1(10)*e*
Healing arts
See also X-RAYS
Brachytherapy, *see Sealed Sources below*
Definitions **641**—38.2, 41.2(2)
Gases/aerosols **641**—41.2(35)
Implants **641**—41.2(27,44–48)

In vitro clinical/laboratory tests **641**—39.4(22)*i*, 39.4(29)*h*
Mammography, *see X-RAYS*
Mobile service **641**—41.2(13,28)
Radionuclides, *generally* **641**—41.2
Radiopharmaceuticals
See also PHARMACISTS AND PHARMACY: Nuclear
Assays **641**—41.2(19)
Calibrators **641**—41.2(17)
Diagnostic studies, uptake, dilution, excretion **641**—41.2(31,67)
Imaging/localization studies **641**—41.2(33,68)
License **641**—39.4(3)*c*(5), 39.4(29)*j,k*
Mobile service **641**—41.2(28)
Molybdenum **641**—41.2(34)
Patients/research subjects **641**—39.4(3)*c*(5)"2," 41.2(27)
Safety **641**—41.2(38,39)
Storage **641**—41.2(29)
Surveys **641**—41.2(26,28,32,40)
Syringes, labels/shields **641**—41.2(22–25)
Therapy **641**—41.2(37,40,69)
Sealed sources
Brachytherapy **641**—38.2, 40.32(1)*f,g*, 41.2(2), 41.2(21,43,46,70)
Calibration/reference **641**—41.2(20)
Diagnosis **641**—41.2(41,42,72)
Instructions **641**—41.2(21)*a*
Inventory **641**—41.2(21)*g*, 41.2(46)
Leak testing **641**—40.32, 41.2(21)*b–f*
Millicuries, limitation **641**—41.2(20)
Teletherapy **641**—41.2(2,15,49,50,60,61,63,64,73)
Training **641**—41.2(70,72,73)

Surveys **641**—38.2, 40.36, 41.2(18), 41.2(21)*h,i*, 41.2(26,28,32,40,42,54,60), *see also Therapeutic Machines this subheading below*

Teletherapy
See also Sealed Sources above
Access **641**—41.2(53)
Administration, directives **641**—41.2(14)*f*
Calibrations **641**—41.2(57,58)
Inspection **641**—41.2(64)
Instructions **641**—41.2(52)
Maintenance **641**—41.2(50)
Modifications **641**—41.2(51,62)
Monitoring **641**—41.2(55)
Spot checks **641**—41.2(59,61)
Surveys **641**—41.2(54,60)
Training **641**—41.2(73,74)

Therapeutic machines
Administration
Dose **641**—41.3(14,15)
Facilities **641**—41.3(4)
Definitions **641**—41.3(2)
Equipment **641**—41.3(16)*c*, 41.3(17)*a,f*, 41.3(18)*a*
Facilities **641**—41.3(18)*b*, 41.3(19)
Operation **641**—41.3(4,7), 41.3(17)*e*, 41.3(18)*d*
Photon/electron systems **641**—41.3(18), ch 41 Appendix E "III"
Physicians **641**—41.3(5,10,15)
Physicists **641**—41.3(6,8), 41.3(16)*a*, 41.3(17)*c*, 41.3(17)*d*(6), 41.3(18)*c,e*
Quality assurance **641**—41.3(17)*d*, 41.3(18)*c,e,f*, ch 41 Appendix D
Records **641**—41.3(10)*b*, 41.3(11,12,14–16), 41.3(17)*c*(3), 41.3(17)*d*(10), 41.3(18)*a*, 41.3(18)*e*(3), 41.3(18)*f*(10)
Registration **641**—41.3(3)

RADIATION MACHINES AND RADIOACTIVE MATERIALS (cont'd)
Healing arts
Therapeutic machines

Reports **641**—41.3(15)*b*, 41.3(16)*b*(3), 41.3(16)*d*
Shielding **641**—41.3(16)*b*, 41.3(19), ch 41 Appendix E
Surveys **641**—41.3(11)*b*, 41.3(16)*a*(3), 41.3(16)*b*(3), 41.3(16)*d*, 41.3(17)*f*
Training **641**—41.3(5–7)

Training **641**—41.2(38,66–74,76,77), 41.3(5–7)

Hospitals **481**—51.16; **641**—40.42(6), 40.62(2,5)
Industrial radiography
Generally **641**—ch 45
Analytical X-ray equipment **641**—45.5
Audits **641**—45.1(11), 45.4(6)*b,c*
Caution signs/signals/labels/warning devices **641**—45.1(9), 45.1(12)*b*, 45.1(15), 45.1(16)*a*(7), 45.2(3)*b*, 45.3(4,5), 45.4(9), 45.4(10)*c*, 45.5(3)*d*, 45.5(4)*c*, 45.5(5)*b*, 45.6(13), 45.6(25)*d*, ch 45 Appendix F
Certification **641**—38.8(3)
Definitions **641**—45.1(2), 45.4(2), 45.6(3)
Emergencies, *see Operation/Emergency Procedures this subheading below*
Enclosed, cabinet/shielded-room **641**—45.1(2,3), 45.2(6), 45.3(8)
Exemptions **641**—45.1(3,10), 45.2(6)
Fees **641**—38.8
Identification cards **641**—39.4(90)*b*(9), 45.1(10)*b,f–h*
Inspections **641**—45.1(4,6–9), 45.1(10)*e*, 45.1(10)*h*(3), 45.1(11), 45.1(12)*d*, 45.1(16), 45.1(17)*f*, 45.2(5,6), 45.3(7)*j*, 45.4(6)*b*, 45.4(10)*c,d,f*, 45.4(11)*j*, 45.6(10,11,14), 45.6(15)*c*, 45.6(17)*b*, 45.6(22–24), ch 45 Appendix B, *see also Surveys this subheading below*
Leak testing **641**—45.1(16)*a*(7), 45.3(5)
Locks **641**—45.1(14), 45.2(1), 45.3(2)
Monitoring, personnel **641**—45.1(12), 45.2(4)*a*(5), 45.4(5), 45.6(17)
Operation/emergency procedures **641**—45.1(10)*a*(1)"4," 45.1(12,17), 45.2(4,6), 45.3(6), 45.4(8–10), 45.6(16), ch 45 Appendix D
Particle accelerators **641**—45.4, 45.6(21)
Records **641**—45.1(4), 45.1(5)*c*, 45.1(6–9), 45.1(10)*e*, 45.1(11,12,16), 45.2(4)*a*(8), 45.2(5,6), 45.3(5)*c*, 45.3(7)*j*, 45.4(6)*b,c*, 45.4(10)*e*, 45.4(11)*d,j*, 45.6(10,11,14), 45.6(17)*b*, 45.6(22–24), ch 45 Appendix C
Registration/license **641**—38.8, 45.1(16), 45.2(7), 45.4(3,4)
Reports **641**—45.1(18), 45.4(10)*d*, 45.6(25)*c*
Sealed sources **641**—39.4(27)*e*, 45.1(6,7,13), 45.3, 45.6(4,9,12,14,25)
Standards, *see Federal Standards above*
Storage **641**—45.2(2), 45.3(1–3), 45.6(5,6)
Supervision, trainees **641**—45.1(13)
Surveillance **641**—38.8(5), 45.1(14), 45.6(18)

Surveys **641**—45.1(5), 45.2(4)*a*, 45.2(5), 45.3(2)*c*, 45.3(7), 45.4(7,11), 45.6(8,22–24)
Temporary sites **641**—45.1(16)
Training **641**—45.1(10,13), 45.6(15), ch 45 Appendixes A, E
Underwater/lay-barge/off-shore platform **641**—45.1(2), 45.3(9)
Wireline service operations/subsurface tracer studies **641**—45.6, *see also Wireline Service Operations/Subsurface Tracer Studies below*

Inspections **641**—38.2, 38.8(2)*b*, 38.8(4), 38.8(8)*b*, 40.32(4), 40.113–40.116, 41.2(64), 45.6(14), 45.6(15)*c*, 46.2, 46.4(7), 46.6, *see also Industrial Radiography above; Records below; Transportation/Packaging below; X-RAYS*
Labels, *see Caution Signs/Labels/Signals above*
Laboratories **641**—39.4(22)*i*, 39.4(29)*h*, ch 43
Licenses
Generally **641**—ch 39
Amendments **641**—39.4(35,36)
Broad, limitations **641**—ch 39 Appendix D
Exemptions **641**—39.4(2,3), *see also General this subheading below; Specific this subheading below*
Fees **641**—38.8
General
Calibration/reference sources **641**—39.4(22)*g*
Devices
Aircraft, luminous safety **641**—39.4(22)*e*
Ice detection **641**—39.4(22)*j*
Ionization/static elimination **641**—39.4(22)*a*
Measuring/gauging/controlling **641**—39.4(22)*d*
Uranium, depleted **641**—39.4(21)*e*

Exemptions **641**—39.4(21)*b*, 39.4(21)*e*(5), 39.4(22)*d*(3)"9," 39.4(22)*e*(2), 39.4(22)*i*(6), 39.4(22)*j*(2)"3"
In vitro clinical/laboratory testing **641**—39.4(22)*i*, 39.4(29)*h*
Ownership, quantity **641**—39.4(22)*f*
Source material, use/transfer **641**—39.4(2)*a–c*, 39.4(21)

Medical use **641**—41.2(3,4), 41.2(5)*d*, 41.2(13)
Nuclear material, noncritical mass **641**—39.4(37,90), *see also Federal Standards above*
Particle accelerators **641**—45.4(3)
Reciprocity **641**—38.8(8)
Revocation/suspension/modification **641**—38.9, 39.4(24)*b*, 39.4(51)
Site use, unrestricted **641**—40.29

Specific
Application, *generally* **641**—39.4(24,25), 39.4(31)
Broad scope **641**—39.4(28)
Decommissioning **641**—39.4(26), 40.28
Denial **641**—39.4(24)*b*, 39.4(29)*m*(3)
Exemptions **641**—39.4(28), 39.4(29)*a–c*
Expiration **641**—39.4(33,38)
Industrial radiography, sealed source use **641**—39.4(27)*e*
Issuance, terms/conditions **641**—39.4(31,32)
Manufacture/distribution
Calibration sources, plutonium/radium/americium **641**—39.4(29)*f*
Exemptions **641**—39.4(29)*b,c*
Generator/reagent kits **641**—39.4(29)*k*
Ice detection devices **641**—39.4(29)*i*
In vitro clinical/laboratory testing **641**—39.4(29)*h*
Luminous safety devices, aircraft **641**—39.4(29)*e*
Measuring/gauging/controlling devices **641**—39.4(29)*d*
Medical devices/sources **641**—39.4(29)*j–l*
NARM (natural/accelerator-produced radioactive material) **641**—39.4(29)*b,c*
Radiopharmaceuticals **641**—39.4(29)*j,k*
Uranium, depleted **641**—39.4(29)*m*
Medical use, *see Manufacture/Distribution this subheading above*
NARM (natural/accelerator-produced radioactive material) **641**—39.4(29)*b,c*, 39.4(38)
Reciprocity **641**—39.4(90)
Renewal **641**—39.4(34,36)
Termination **641**—39.4(33), 40.28, 40.30, 40.31
Therapeutic machines **641**—41.3(3)
Waste disposal **641**—40.70(2)
Manufacturers, *see Licenses: Specific above*
Medical use **641**—39.4(29)*j–l*, 41.2, *see also Healing Arts above*
Nuclear facilities, effluents **567**—41.9(3)*b*
Nuclear medicine technologists
Certification **641**—38.8(6,7), 42.2
Continuing education **641**—42.2(3)
Definitions **641**—42.1(2)