# PUBLIC SAFETY DEPARTMENT[661]

Rules transferred from agency number 680 to 661 to conform with the reorganization numbering scheme in general

## CHAPTER 1
## THE DEPARTMENT


1.1(17A) Establishment of the department of public safety
1.2(17A) Organization
1.3(17A) Offices
1.4(17A) Methods by which and location where the public may obtain information or make submissions or requests
1.5 Reserved
1.6(17A) Legal advice
1.7(17A) Surety companies
1.8(17A) Construction of rules


## CHAPTER 2
Reserved

## CHAPTER 3
## SHERIFF'S UNIFORMS


3.1(17A,331) General provisions
3.2(17A,331) Trousers
3.3(17A,331) Shirts
3.4(17A,331) Hats
3.5(17A,331) Ties
3.6(17A,331) Raingear
3.7(17A,331) Shoes and boots
3.8(17A,331) Gloves
3.9(17A,331) Jackets
3.10(17A,331) Accessories


## CHAPTER 4
Reserved

## CHAPTER 5
## FIRE MARSHAL ADMINISTRATION

GENERAL PROVISIONS


5.1(100) Description
5.2(17A,80,100,101,101A) Definitions
5.3(17A,100) Building plan approval
5.4(17A,100,101,101A) Inspections
5.5(100) Certificates and inspection fees
5.6(17A,80,100) Fire investigations
5.7(17A,101A) Explosive materials
5.8(100,101,101A) Fire drills
5.9(17A,100) Fire escapes
5.10(17A,22,100,692) Public inspection of fire marshal files and fire records
5.11(17A,80,100) Information requested before inspection
5.12(17A,80,100A) Sharing of insurance company information with the fire marshal
5.13(17A,80,100A) Release of information to an insurance company
5.14(17A,80,100A) Forms
5.15(17A,100) Waivers, variances, and exceptions

5.16 to 5.49 Reserved

MEANS OF EXIT

5.50 to 5.99 Reserved

LIFE SAFETY REQUIREMENTS FOR EXISTING BUILDINGS

5.100 to 5.249 Reserved

LIQUEFIED PETROLEUM GASES

5.250 to 5.274 Reserved

LIQUEFIED NATURAL GAS

5.275 to 5.299 Reserved

FLAMMABLE AND COMBUSTIBLE LIQUIDS CODE

5.300 to 5.349 Reserved

OIL BURNING EQUIPMENT

5.350 to 5.399 Reserved

STORAGE OF FLAMMABLE AND COMBUSTIBLE LIQUIDS ON FARMS AND ISOLATED CONSTRUCTION PROJECTS

5.400 to 5.449 Reserved

TRANSPORTATION AND DELIVERY OF FLAMMABLE AND COMBUSTIBLE LIQUIDS BY TANK VEHICLES

5.450 to 5.499 Reserved

CHILD CARE CENTERS

5.500(100) Definitions
5.501(100) Child care centers in mixed occupancies
5.502(100) Child care centers for seven or more children
5.503 to 5.509 Reserved

ADULT DAY SERVICES PROGRAMS

5.510(231D) Adult day services
5.511 to 5.606 Reserved

RESIDENTIAL FACILITIES

5.607 to 5.614 Reserved
5.615(237C) Facilities in which foster care is provided to fewer than six children by agencies
5.616 to 5.619 Reserved
5.620(100,135C) General requirements for small group homes (specialized licensed facilities) licensed pursuant to Iowa Code section 135C.2
5.621 to 5.624 Reserved
5.625(100,231B) Elder group homes
5.626(231C) Assisted living housing
5.627 to 5.649 Reserved

FIRE SAFETY RULES FOR SCHOOL AND COLLEGE BUILDINGS

5.650 Reserved

EXISTING SCHOOL BUILDINGS

5.651 to 5.674 Reserved

NEW SCHOOL BUILDINGS

5.675 to 5.699 Reserved

NEW COLLEGE BUILDINGS

5.700 to 5.748 Reserved

EXISTING COLLEGE BUILDINGS

5.749 to 5.774 Reserved

NEW COLLEGE BUILDINGS

5.775 to 5.799 Reserved

FIRE SAFETY RULES FOR RESIDENTIAL OCCUPANCIES

5.800 Reserved

NEW RESIDENTIAL OCCUPANCIES

5.801 to 5.803 Reserved

EXISTING RESIDENTIAL OCCUPANCIES

5.804 to 5.806 Reserved
5.807(100) Smoke detectors definition
5.808(100) General requirements
5.809(100) Smoke detectors—notice and certification of installation
5.810(100) Smoke detectors—new and existing construction
5.811 to 5.819 Reserved

BED AND BREAKFAST INNS

5.820(100,137C) Bed and breakfast inns
5.821 to 5.849 Reserved

EXPLOSIVE MATERIALS

5.850 Reserved
5.851(101A) Inventory
5.852 to 5.864 Reserved
5.865(101A,252J) Grounds for suspension, revocation, or denial of commercial explosives licenses
5.866(252J) Child support collection procedures

CHAPTER 6
VEHICLE IMPOUNDMENT

6.1(17A,321) Vehicle impoundment
6.2(17A,321) Vehicles which may be impounded immediately
6.3(17A,321) Vehicles which need not be impounded immediately
6.4(17A,321) Impoundment procedure
6.5(17A,321) Abandoned vehicles
6.6(321) Scope

CHAPTER 7
IGNITION INTERLOCK DEVICES

7.1 to 7.7 Reserved
7.8(321J) Breath alcohol ignition interlock device

CHAPTER 8
CRIMINAL JUSTICE INFORMATION

8.1 to 8.100 Reserved

DIVISION I
IOWA ON-LINE WARRANTS AND ARTICLES SYSTEM

8.101(80,692) Iowa on-line warrants and articles (IOWA) criminal justice information system
8.102(80,692) Information available through the IOWA system
8.103(80) Human immunodeficiency virus-related information
8.104(80,692) IOWA system security
8.105(80,692) Subpoenas and court orders

CHAPTER 9
Reserved

## CHAPTER 10
## PRACTICE AND PROCEDURE BEFORE THE DEPARTMENT OF PUBLIC SAFETY


| | |
|---|---|
| 10.1(17A) | Definitions |
| 10.2 to 10.100 | Reserved |
| 10.101(17A) | Petition for declaratory order |
| 10.102(17A) | Notice of petition |
| 10.103(17A) | Intervention |
| 10.104(17A) | Briefs |
| 10.105(17A) | Inquiries |
| 10.106(17A) | Service and filing of petitions and other papers |
| 10.107(17A) | Consideration |
| 10.108(17A) | Action on petition |
| 10.109(17A) | Refusal to issue order |
| 10.110(17A) | Contents of declaratory order—effective date |
| 10.111(17A) | Copies of orders |
| 10.112(17A) | Effect of a declaratory order |
| 10.113 to 10.200 | Reserved |

AGENCY PROCEDURE FOR RULE MAKING

| | |
|---|---|
| 10.201(17A) | Applicability |
| 10.202(17A) | Advice on possible rules before notice of proposed rule adoption |
| 10.203(17A) | Public rule-making docket |
| 10.204(17A) | Notice of proposed rule making |
| 10.205(17A) | Public participation |
| 10.206(17A) | Regulatory analysis |
| 10.207(17A,25B) | Fiscal impact statement |
| 10.208(17A) | Time and manner of rule adoption |
| 10.209(17A) | Variance between adopted rule and published notice of proposed rule adoption |
| 10.210(17A) | Exemptions from public rule-making procedures |
| 10.211(17A) | Concise statement of reasons |
| 10.212(17A) | Contents, style, and form of rule |
| 10.213(17A) | Agency rule-making record |
| 10.214(17A) | Filing of rules |
| 10.215(17A) | Effectiveness of rules prior to publication |
| 10.216(17A) | General statements of policy |
| 10.217(17A) | Review by department of rules |
| 10.218(17A) | Petition for rule making |
| 10.219(17A) | Briefs |
| 10.220(17A) | Inquiries |
| 10.221(17A) | Agency consideration |
| 10.222(17A) | Waivers of rules |
| 10.223 to 10.300 | Reserved |

CONTESTED CASES

| | |
|---|---|
| 10.301(17A) | Scope and applicability |
| 10.302(17A) | Definitions |
| 10.303(17A) | Time requirements |
| 10.304(17A) | Requests for contested case proceeding |
| 10.305(17A) | Notice of hearing |
| 10.306(17A) | Presiding officer |
| 10.307(17A) | Waiver of procedures |
| 10.308(17A) | Telephone proceedings |
| 10.309(17A) | Disqualification |

10.310(17A) Consolidation—severance
10.311(17A) Pleadings
10.312(17A) Service and filing of pleadings and other papers
10.313(17A) Discovery
10.314(17A) Subpoenas
10.315(17A) Motions
10.316(17A) Prehearing conference
10.317(17A) Continuances
10.318(17A) Withdrawals
10.319(17A) Intervention
10.320(17A) Hearing procedures
10.321(17A) Evidence
10.322(17A) Default
10.323(17A) Ex parte communication
10.324(17A) Recording costs
10.325(17A) Interlocutory appeals
10.326(17A) Final decision
10.327(17A) Appeals and review
10.328(17A) Applications for rehearing
10.329(17A) Stays of agency actions
10.330(17A) No factual dispute contested cases
10.331(17A) Emergency adjudicative proceedings
10.332(17A) Burden of proof

CHAPTER 11
IDENTIFICATION SECTION OF THE DIVISION OF CRIMINAL INVESTIGATION

11.1(17A,690,692) Identification section
11.2(17A,690,692) Definitions
11.3(690,692) Release of information
11.4(690,692) Right of review
11.5(690,692) Review of record
11.6(17A,690,692) Inaccuracies in criminal history
11.7(17A,690,692) Fingerprint files and crime reports
11.8(690) Taking of fingerprints
11.9(17A,690,692) Arresting agency portion of final disposition form
11.10(690,692) Final disposition form
11.11 Reserved
11.12(692) Release of information to the public
11.13 Reserved
11.14(692) Scope of record checks for non-criminal justice agencies and individuals
11.15(692) Fees
11.16 Reserved
11.17(17A,22,692) Requests for criminal history data
11.18(690) Administrative sanctions
11.19(232) Juvenile fingerprints and criminal histories
11.20(135C) Release of dependent adult abuse records
11.21(692) Criminal history checks for qualified entities

CHAPTER 12
Reserved

## CHAPTER 13
## SPECIAL RAILWAY AGENTS


13.1(17A,80) Appointment of railway special agents
13.2(17A,80) Standards
13.3(17A,80) Training requirements
13.4(17A,80) Letter of request
13.5(17A,80) Application form
13.6(17A,80) Photographs
13.7(17A,80) Vision classification
13.8(17A,80) Surety bond
13.9(17A,80) Background investigation
13.10(17A,80) Weapons permit
13.11(17A,80) Renewal of permit
13.12(17A,80) Weapons training
13.13(17A,80) Review of application
13.14(17A,80) Identification card
13.15(17A,80) Notification
13.16(17A,80) Notice of termination of employment


## CHAPTER 14
Reserved

## CHAPTER 15
## LAW ENFORCEMENT ADMINISTRATOR'S TELECOMMUNICATIONS ADVISORY COMMITTEE (LEATAC)


15.1(693) Establishment of committee
15.2(693) Membership of committee
15.3(693) Terms of appointment
15.4(693) Officers
15.5(693) Bylaws
15.6(693) Duties


## CHAPTER 16
## STATE BUILDING CODE—FACTORY-BUILT STRUCTURES


16.1 to 16.609 Reserved

PART 1—MODULAR FACTORY-BUILT STRUCTURES

16.610(103A) "Modular factory-built structures"
16.611 to 16.619 Reserved

PART 2—MANUFACTURED HOUSING

16.620(103A) Manufactured home construction
16.621(103A) Installation of manufactured homes
16.622 Reserved
16.623(103A) Installation seal and certificate procedures for manufactured homes
16.624 to 16.626 Reserved
16.627(103A) Approval of existing manufactured home tie-down systems
16.628(103A) Procedure for governmental subdivisions for installation of factory-built structures
16.629(103A) Support and anchoring systems submission


## CHAPTER 17
Reserved

CHAPTER 18
PARKING FOR PERSONS WITH DISABILITIES

18.1(321L) Scope
18.2(321L) Location
18.3(321L) Dimensions
18.4(321L) Access aisles and loading zones
18.5(321L) Designation
18.6(321L) Numbers of parking spaces for persons with disabilities required in off-street parking facilities
18.7(321L) Persons with disabilities parking at residential facilities
18.8(321L) On-street parking

CHAPTER 19
Reserved

CHAPTER 20
GOVERNOR'S TRAFFIC SAFETY BUREAU

20.1(23USC402,ExecOrd23) Authority
20.2(23USC402,ExecOrd23) Purpose
20.3(23USC402,ExecOrd23) Responsibilities
20.4(23USC402,ExecOrd23) Funding criteria
20.5(23USC402,ExecOrd23) Program requirements

CHAPTERS 21 to 24
Reserved

CHAPTER 25
PUBLIC RECORDS AND FAIR INFORMATION PRACTICES
(Uniform Rules)

PREAMBLE

25.1(17A,22) Definitions
25.2(17A,22) Statement of policy
25.3(17A,22) Requests for access to records
25.4(17A,22) Procedures for access to confidential records
25.5(17A,22) Requests for treatment of a record as a confidential record
25.6(17A,22) Procedure by which a subject may have additions, dissents, or objections entered into the record
25.7(17A,22) Consent to disclosure by the subject of a confidential record
25.8 Reserved
25.9(17A,22) Disclosures without the consent of the subject
25.10(17A,22) Routine use
25.11(17A,22) Records management manual
25.12(17A,22) Data processing system
25.13(22) Confidential records
25.14(252J) Release of confidential licensing information for child support recovery purposes
25.15(22,82GA,SF457) Release of official photographs of employees

CHAPTERS 26 and 27
Reserved

CHAPTER 28
MARIJUANA ERADICATION PROCEDURES

28.1(80) Reports of marijuana
28.2(80) Cultivated marijuana

28.3(80) Uncultivated marijuana
28.4(80) Scope and limitation

CHAPTERS 29 to 34
Reserved

CHAPTER 35
COMPLAINTS AGAINST EMPLOYEES
35.1(80) Definitions
35.2(80) Filing a complaint
35.3(80) Notification to complainant

CHAPTERS 36 to 40
Reserved

CHAPTER 41
PAYMENT OF SMALL CLAIMS TO EMPLOYEES
41.1(17A,80) Authorization to reimburse

CHAPTERS 42 to 50
Reserved

CHAPTER 51
FLAMMABLE AND COMBUSTIBLE LIQUIDS
51.1(101) Definitions
51.2 to 51.149 Reserved
51.150(101) Production, storage, and handling of liquefied natural gas

CHAPTER 52
Reserved

CHAPTER 53
FIRE SERVICE TRAINING BUREAU
53.1(78GA,HF2492) Fire service training bureau
53.2(78GA,HF2492) Programs, services, and fees

CHAPTERS 54 to 80
Reserved

CHAPTER 81
CRIMINAL INTELLIGENCE INFORMATION
81.1(692) Definitions
81.2(692) Iowa law enforcement intelligence network (LEIN) information system
81.3(692) Criminal intelligence file security
81.4(692) Review of criminal intelligence files—purging
81.5(692) Subpoenas and court orders

CHAPTER 82
Reserved

CHAPTER 83
IOWA SEX OFFENDER REGISTRY
83.1(692A) Sex offender registry established
83.2(692A) Definitions
83.3(692A) Forms and procedures

83.4(692A) Availability of records
83.5(692A) Expungement of records

CHAPTERS 84 to 88
Reserved

CHAPTER 89
MISSING PERSONS

89.1 to 89.99 Reserved

DIVISION I
MISSING PERSON INFORMATION CLEARINGHOUSE

89.100(694) Missing person information clearinghouse
89.101(694) Administration of missing person information clearinghouse
89.102(694) Definitions
89.103(694) Program information
89.104(694) Prevention and education programs and materials
89.105(694) Release of information
89.106(694) Dissemination
89.107(694) Training
89.108 to 89.199 Reserved

DIVISION II
AMBER ALERT PROGRAM

89.200(694) AMBER alert program
89.201(694) Criteria
89.202(694) Activation procedures
89.203(694) Alternative alert if criteria are not satisfied

CHAPTER 90
Reserved

CHAPTER 91
WEAPONS PERMITS

91.1(724) Definitions
91.2(724) Forms
91.3(724) Training programs
91.4(724) Application procedures for a permit to carry a weapon
91.5(724) Firearm purchase or transfer—permit to acquire pistols or revolvers
91.6(724) Reports and remittance to the state
91.7(724) Offensive weapons as collector's items—method of classification

CHAPTERS 92 to 94
Reserved

CHAPTER 95
DISPOSITION OF SEIZED AND FORFEITED WEAPONS AND AMMUNITION

95.1(809,809A) Definitions
95.2(809,809A) Ammunition and firearms
95.3(809,809A) Firearms inventory
95.4(809,809A) Deposit of firearms in the firearms reference file
95.5(809,809A) Disposition of firearms (interstate)
95.6(809A) Transfer of rifles and shotguns to the department of natural resources
95.7(809,809A) Disposition of firearms (intrastate)
95.8(809,809A) Final disposition and destruction of firearms

95.9(809,809A) Claims
95.10(809,809A) Disposition of explosives
95.11(809,809A) Disposition of weapons other than firearms and explosives

CHAPTERS 96 to 120
Reserved

CHAPTER 121
BAIL ENFORCEMENT, PRIVATE INVESTIGATION, AND
PRIVATE SECURITY BUSINESSES

121.1(80A) Licensing
121.2(80A) Definitions
121.3(80A) Persons exempt
121.4(80A) Licenses
121.5(80A) License requirements
121.6(80A) Identification cards
121.7(80A) License and background investigation fees
121.8(80A) Display of license
121.9(80A) Duplicate license
121.10(80A) License renewal
121.11(80A) Employee identification cards
121.12(80A) Badges, uniforms, insignia, patches and hats
121.13(80A) Advertisement, cards, letterhead and the like
121.14(80A) Misleading statements
121.15(80A) Reports
121.16(80A) Denial, cancellation, suspension, or revocation of a license or identification card
121.17(80A) Licensee's duty regarding employees
121.18(80A) Campus weapon requirements
121.19(80A) Professional permit to carry weapons
121.20(80A) Appeals
121.21(252J) Child support collection procedures
121.22(80A) Continuing education requirements
121.23(80A) Reciprocity
121.24(80A) Replacement license

CHAPTERS 122 to 140
Reserved

CHAPTER 141
CLOSED CIRCUIT SURVEILLANCE SYSTEMS

141.1(99F) Definitions
141.2(99F) Minimum standards
141.3(99F) Surveillance departments—organizational structure
141.4(99F) Closed circuit surveillance system
141.5(99F) Required equipment
141.6(99F) Required surveillance
141.7(99F) Equipment in DCI offices
141.8(99F) Camera lenses
141.9(99F) Lighting
141.10(99F) Surveillance room
141.11(99F) Nongambling hours
141.12(99F) Waivers from requirements

CHAPTERS 142 to 149
Reserved

CHAPTER 150
DIVISION OF CRIMINAL INVESTIGATION CRIMINALISTICS LABORATORY

150.1(691) Criminalistics laboratory
150.2(691) Purpose and scope of work
150.3(691) Laboratory capabilities
150.4(691) Evidence submission to the laboratory
150.5(17A,691) Distribution of reports
150.6(17A,691) Disposition of evidence

CHAPTERS 151 to 155
Reserved

CHAPTER 156
DNA DATABASE

156.1(81GA,HF619) Establishment of DNA database
156.2(81GA,HF619) Definitions
156.3(81GA,HF619) Administration of DNA database
156.4(81GA,HF619) Collection of DNA samples
156.5(81GA,HF619) Submission of DNA samples
156.6(81GA,HF619) Analysis of DNA samples
156.7(81GA,HF619) Identification of DNA samples
156.8(81GA,HF619) Storage of DNA samples
156.9(81GA,HF619) Disposition of DNA samples
156.10(81GA,HF619) Expungement of DNA samples

CHAPTER 157
DEVICES AND METHODS TO TEST BODY FLUIDS FOR ALCOHOL OR DRUGS

157.1(321J) Approval of devices and methods to test for alcohol or drug concentration
157.2(321J) Breath testing
157.3(321J) Urine collection
157.4(321J) Submission of samples for alcohol and drug testing to the criminalistics laboratory
157.5(321J) Preliminary breath screening test
157.6(123) Chemical test—alcohol concentration—public intoxication
157.7(321J) Detection of drugs other than alcohol

CHAPTERS 158 to 173
Reserved

CHAPTER 174
RETAIL SALES OF PSEUDOEPHEDRINE

174.1(81GA,SF169) Electronic logbooks
174.2(81GA,SF169) Reporting of civil penalties

CHAPTERS 175 to 200
Reserved

CHAPTER 201
GENERAL FIRE SAFETY REQUIREMENTS

201.1(100) Scope
201.2(100) General provisions
201.3(100) Electrical installations

201.4(100) Existing buildings or structures
201.5(100) Recognition of local fire ordinances and enforcement

CHAPTER 202
REQUIREMENTS FOR SPECIFIC OCCUPANCIES

202.1(100) Scope
202.2(237) Facilities in which foster care is provided by agencies to fewer than six children
202.3(137C) Bed and breakfast inns
202.4(100) Existing jails and correctional facilities

CHAPTERS 203 and 204
Reserved

CHAPTER 205
FIRE SAFETY REQUIREMENTS FOR HOSPITALS AND HEALTH CARE FACILITIES

205.1(100) Definitions
205.2 to 205.4 Reserved
205.5(100) Hospitals
205.6 to 205.9 Reserved
205.10(100) Nursing facilities and hospices
205.11 to 205.14 Reserved
205.15(100) Intermediate care facilities for the mentally retarded and intermediate care facilities for persons with mental illness
205.16 to 205.19 Reserved
205.20(100) Ambulatory health care facilities
205.21 to 205.24 Reserved
205.25(100) Religious nonmedical health care institutions
205.26 to 205.99 Reserved
205.100(135C) Residential care facilities

CHAPTERS 206 to 209
Reserved

CHAPTER 210
SMOKE DETECTORS

210.1(100) Definition
210.2(100) General requirements
210.3(100) Smoke detectors—notice and certification of installation
210.4(100) Smoke detectors—new and existing construction

CHAPTERS 211 to 220
Reserved

CHAPTER 221
FLAMMABLE AND COMBUSTIBLE LIQUIDS

221.1(101) Scope
221.2(101) Definitions
221.3(101) Flammable and combustible liquids
221.4(101) Motor fuel dispensing facilities and repair garages
221.5(101) Aircraft fueling
221.6(101) Helicopter fueling
221.7(101) Fuel-fired appliances
221.8(101) Stationary combustion engines and gas turbines

CHAPTERS 222 and 223
Reserved

CHAPTER 224
ABOVEGROUND PETROLEUM STORAGE TANKS

224.1(101) Scope
224.2(101) Definition
224.3(101) Compliance
224.4(101) Registration of existing and new tanks—fees
224.5(101) Approval of plans
224.6(101) Inspections and orders
224.7(101) Leaks, spills, or damage
224.8(101) Civil penalty
224.9(17A,101) Appeals

CHAPTER 225
Reserved

CHAPTER 226
LIQUEFIED PETROLEUM GAS

226.1(101) General requirements
226.2(101) Transfer into container
226.3(101) Prohibition of certain refrigerants
226.4(101) Qualifications of personnel
226.5(101) Pressure testing
226.6(101) Damages—reporting

CHAPTERS 227 to 230
Reserved

CHAPTER 231
MANUFACTURING, STORAGE, HANDLING, AND
USE OF EXPLOSIVE MATERIALS

231.1(101A) Explosive materials

CHAPTERS 232 to 250
Reserved

CHAPTER 251
FIRE FIGHTER TRAINING AND CERTIFICATION

251.1(100B) Definitions
251.2 to 251.100 Reserved

MINIMUM TRAINING STANDARDS

251.101(100B) Minimum training standard
251.102(100B) Other training
251.103(100B) Continuing training
251.104(100B) Record keeping
251.105 to 251.200 Reserved

FIRE FIGHTER CERTIFICATION

251.201(100B) Fire fighter certification program
251.202(100B) Certification standards
251.203(100B) Fees
251.204(100B) Certification, denial, and revocation of certification

CHAPTERS 252 to 258
Reserved

CHAPTER 259
FIRE FIGHTER TRAINING AND EQUIPMENT FUNDS

259.1 to 259.100 Reserved

DIVISION I
VOLUNTEER FIRE FIGHTER TRAINING AND EQUIPMENT FUND

259.101(17A,77GA,ch1222) Establishment of fund
259.102(17A,77GA,ch1222) Allocations
259.103(17A,77GA,ch1222) Awards to private providers of training
259.104(100B) Paul Ryan memorial fire fighter safety training fund
259.105(80GA,ch1175) Volunteer fire fighter preparedness fund
259.106 to 259.200 Reserved

DIVISION II
FIRE FIGHTING EQUIPMENT REVOLVING LOAN FUND

259.201(80GA,ch177) Fire fighting equipment revolving loan fund
259.202(80GA,ch177) Purpose and scope
259.203(80GA,ch177) Definitions
259.204(80GA,ch177) Application process
259.205(80GA,ch177) Allowable acquisitions
259.206(80GA,ch177) Eligibility requirements and restrictions
259.207(80GA,ch177) Loan origination fee and repayment schedule
259.208 to 259.300 Reserved

DIVISION III
REGIONAL TRAINING FACILITY FUNDS

259.301(100B) Regional training center program
259.302(100B) Definitions
259.303(100B) Availability of funds
259.304(100B) Application process
259.305(100B) Processing of submitted applications

CHAPTERS 260 to 274
Reserved

CHAPTER 275
CERTIFICATION OF AUTOMATIC FIRE EXTINGUISHING SYSTEM CONTRACTORS

275.1(100C) Establishment of program
275.2(100C) Definitions
275.3(100C) Responsible managing employee
275.4(100C) Certification requirements
275.5(100C) Application and fees
275.6(100C) Complaints
275.7(100C) Denial, suspension, or revocation of certification; civil penalties; and appeals

CHAPTERS 276 to 290
Reserved

CHAPTER 291
VOLUNTEER EMERGENCY SERVICES PROVIDER DEATH BENEFITS

291.1(100B) Volunteer emergency services provider death benefit program
291.2(100B) Eligibility
291.3(100B) Determination

CHAPTERS 292 to 299
Reserved

CHAPTER 300
STATE BUILDING CODE—ADMINISTRATION

300.1(103A) State building code promulgated
300.2(103A) Building code commissioner
300.3(103A) Building code advisory council
300.4(103A) Plan reviews
300.5(103A) Inspections
300.6(103A) Local code enforcement

CHAPTER 301
STATE BUILDING CODE—GENERAL PROVISIONS

301.1(103A) Scope and applicability
301.2(103A) Definitions
301.3(103A) General provisions
301.4(103A) Mechanical requirements
301.5(103A) Electrical requirements
301.6(103A) Plumbing requirements
301.7(103A) Existing buildings
301.8(103A) Residential construction requirements

CHAPTER 302
STATE BUILDING CODE—ACCESSIBILITY OF BUILDINGS AND FACILITIES AVAILABLE TO THE PUBLIC

302.1(103A,104A) Purpose and scope
302.2(103A,104A) Definitions
302.3(103A,104A) Plan review procedures
302.4(103A,104A) Site development
302.5(103A,104A) Building elements and spaces accessible to the physically handicapped
302.6(103A,104A) Restaurants and cafeterias
302.7(103A,104A) Medical care facilities
302.8(103A,104A) Business and mercantile facilities
302.9(103A,104A) Libraries
302.10(103A,104A) Transient lodging facilities
302.11(103A,104A) Transportation facilities
302.12 to 302.19 Reserved
302.20(103A,104A) Making apartments accessible and functional for persons with disabilities

CHAPTER 303
STATE BUILDING CODE—REQUIREMENTS FOR ENERGY CONSERVATION IN CONSTRUCTION

303.1(103A) Scope and applicability of energy conservation requirements
303.2(103A) Residential energy code
303.3(103A) Adoption of nonresidential energy code
303.4(470) Life cycle cost analysis
303.5(103A) Energy review fee

CHAPTERS 304 to 321
Reserved

CHAPTER 322
STATE BUILDING CODE —
MANUFACTURED HOUSING SUPPORT AND ANCHORAGE SYSTEMS


| | |
|---|---|
| 322.1 | Reserved |
| 322.2(103A) | Definitions |
| 322.3 to 322.10 | Reserved |
| 322.11(103A) | Support and anchorage of manufactured homes |
| 322.12(103A) | Suspension of installation requirements in proclaimed disaster emergencies |
| 322.13 to 322.19 | Reserved |
| 322.20(103A) | Fees |


CHAPTER 323
TEMPORARY EMERGENCY USE OF FACTORY-BUILT STRUCTURES-COMMERCIAL USE


| | |
|---|---|
| 323.1(103A) | Temporary factory-built structures for commercial use |


CHAPTERS 324 to 349
Reserved

CHAPTER 350
STATE HISTORIC BUILDING CODE


| | |
|---|---|
| 350.1(103A) | Scope and definition |


CHAPTERS 351 to 371
Reserved

CHAPTER 372
MANUFACTURED OR MOBILE HOME RETAILERS,
MANUFACTURERS, AND DISTRIBUTORS


| | |
|---|---|
| 372.1(103A) | Definitions |
| 372.2(103A) | Criteria for obtaining a manufactured or mobile home retailer's license |
| 372.3(103A) | Operation under distinct name |
| 372.4(103A) | Supplemental statements |
| 372.5(103A) | Denial, suspension, or revocation—civil penalties |
| 372.6(103A,321) | Sale or transfer of manufactured or mobile homes |
| 372.7(103A) | Right of inspection |
| 372.8(103A) | Criteria for obtaining a manufactured or mobile home manufacturer's or distributor's license |
| 372.9(17A,103A) | Waivers |


CHAPTER 373
Reserved

CHAPTER 374
MANUFACTURED HOUSING INSTALLER CERTIFICATION


| | |
|---|---|
| 374.1(103A) | Certification program |
| 374.2(103A) | Certified installer required |
| 374.3(103A) | Requirements for installer certification |
| 374.4(103A) | Certification fee |
| 374.5(103A) | Certification period |
| 374.6(103A) | Review of application for certification |
| 374.7(103A) | Certification renewal and continuing education |
| 374.8(103A) | Suspension or revocation of certification |
| 374.9(103A) | Civil penalties |

374.10(103A) Inspections
374.11(103A) Temporary certification during proclaimed disaster emergencies

CHAPTERS 375 to 399
Reserved

CHAPTER 400
PEACE OFFICERS' RETIREMENT, ACCIDENT, AND
DISABILITY SYSTEM—GOVERNANCE AND ADMINISTRATION

400.1(97A) Establishment of system
400.2(97A) Definitions
400.3(97A) Governance
400.4(97A) Meetings of board of trustees
400.5(97A) Administrative support
400.6(97A) Forms and information
400.7(97A) Annual statements
400.8(97A) Books of account
400.9(97A) Investments
400.10(97A) Medical board

CHAPTER 401
PEACE OFFICERS' RETIREMENT, ACCIDENT, AND
DISABILITY SYSTEM—ADMINISTRATIVE PROCEDURES

401.1(97A) Applications
401.2(97A) Determination on initial review
401.3 to 401.100 Reserved

PROCEDURE FOR RULE MAKING

401.101(17A) Applicability
401.102(17A) Advice on possible rules before notice of proposed rule adoption
401.103(17A) Public rule-making docket
401.104(17A) Notice of proposed rule making
401.105(17A) Public participation
401.106(17A) Regulatory analysis
401.107(17A,25B) Fiscal impact statement
401.108(17A) Time and manner of rule adoption
401.109(17A) Variance between adopted rule and published notice of proposed rule adoption
401.110(17A) Concise statement of reasons
401.111(17A,97A) Agency rule-making record
401.112(17A,97A) Petitions for rule making
401.113(17A,97A) Waivers of rules
401.114 to 401.200 Reserved

DECLARATORY ORDERS

401.201(17A) Petition for declaratory order
401.202(17A) Notice of petition
401.203(17A) Intervention
401.204(17A) Briefs
401.205(17A) Inquiries
401.206(17A) Service and filing of petitions and other papers
401.207(17A) Consideration
401.208(17A) Action on petition
401.209(17A) Refusal to issue order
401.210(17A) Contents of declaratory order—effective date

401.211(17A) Copies of orders
401.212(17A) Effect of a declaratory order
401.213 to 401.300 Reserved

CONTESTED CASES

401.301(17A) Contested case proceeding
401.302(17A) Discovery
401.303(17A) Subpoenas in a contested case
401.304(17A) Motions
401.305(17A) Settlements
401.306(17A) Prehearing conference
401.307(17A) Continuances
401.308(17A) Withdrawals
401.309(17A) Hearing procedures
401.310(17A) Evidence
401.311(17A) Ex parte communication
401.312(17A) Decisions
401.313(17A) No factual dispute contested cases
401.314(17A) Applications for rehearing

CHAPTER 402
PEACE OFFICERS' RETIREMENT, ACCIDENT, AND DISABILITY SYSTEM—
ELIGIBILITY, BENEFITS, AND PAYMENTS

402.1 to 402.99 Reserved

DIVISION I
ELIGIBILITY

402.100(97A) Age of qualification
402.101(97A) Date of retirement
402.102(97A) Application of Iowa Code Supplement section 97A.6, subsection 12
402.103(97A) Date of death
402.104(97A) Age of spouse
402.105 to 402.199 Reserved

DIVISION II
BENEFITS AND PAYMENTS

402.200(97A) Computation of average final compensation
402.201(97A) Workers' compensation—effect on benefit payment
402.202(97A) Errors in payments
402.203(97A) Initial benefit for a child
402.204(97A) Computation for partial month
402.205(97A) One year of service
402.206(97A) Termination prior to retirement
402.207(97A) Optional retirement benefits
402.208(97A) Options not reversible once payments begin—exceptions
402.209(97A) Method of calculating annual adjustments when optional retirement benefits are selected
402.210(97A) Termination of benefits when optional retirement benefits are selected
402.211(97A) Impact of optional benefit selections on child benefits
402.212 to 402.299 Reserved

DIVISION III
SERVICE PURCHASES

402.300(97A) Purchase of eligible service credit
402.301(97A) Determination of eligible service

402.302(97A) Determination of cost to member
402.303(97A) Application process
402.304(97A) Service adjustment irrevocable
402.305(97A) Board review
402.306(97A) Other provisions

CHAPTER 403
PEACE OFFICERS' RETIREMENT, ACCIDENT, AND DISABILITY SYSTEM—
LINE-OF-DUTY DEATH BENEFIT

403.1(97A) Member death benefit program
403.2(97A) Application
403.3(97A) Determination

CHAPTER 404
PEACE OFFICERS' RETIREMENT, ACCIDENT, AND DISABILITY SYSTEM—
TEMPORARY INCAPACITY

404.1(97A) Temporary incapacity defined
404.2(97A) Application for temporary incapacity status
404.3(97A) Processing applications for temporary incapacity status
404.4(97A) Actions by the board
404.5(97A) Sick leave
404.6(97A) Recurrences
404.7(97A) Review
404.8(97A) Discontinuance of temporary incapacity status
404.9(97A) Appeals

CHAPTERS 405 to 499
Reserved

CHAPTER 500
ELECTRICIAN AND ELECTRICAL CONTRACTOR LICENSING PROGRAM—
ORGANIZATION AND ADMINISTRATION

500.1(82GA,ch197) Establishment of program
500.2(82GA,ch197) Definitions

CHAPTER 501
ELECTRICIAN AND ELECTRICAL CONTRACTOR LICENSING PROGRAM—
ADMINISTRATIVE PROCEDURES

501.1(82GA,ch197) Board meetings and agenda
501.2 to 501.4 Reserved
501.5(17A) Waivers

CHAPTER 502
ELECTRICIAN AND ELECTRICAL CONTRACTOR LICENSING PROGRAM—LICENSING
REQUIREMENTS, PROCEDURES, AND FEES

502.1(82GA,ch197) License categories and licenses required
502.2(82GA,ch197) License requirements
502.3(82GA,ch197) License terms and fees
502.4(82GA,ch197) Disqualifications for licensure
502.5(82GA,ch197) License application
502.6(82GA,ch197) Restriction of use of class B licenses by political subdivisions
502.7(82GA,ch197) Financial responsibility

CHAPTER 503
ELECTRICIAN AND ELECTRICAL CONTRACTOR LICENSING PROGRAM—
COMPLAINTS AND DISCIPLINE

503.1(82GA,ch197) Complaints
503.2(82GA,ch197) Discipline
503.3(82GA,ch197) Action against an unlicensed person
503.4(82GA,ch197) Appeals
503.5(252J,82GA,ch197) Suspension or revocation for nonpayment of child support

CHAPTER 504
STANDARDS FOR ELECTRICAL WORK

504.1(82GA,ch197) Installation requirements

# CHAPTER 1
# THE DEPARTMENT

[Prior to 4/20/88, see Public Safety Department, 680—Ch 1]

**661—1.1(17A) Establishment of the department of public safety.** The state department of public safety was created by an Act of the General Assembly (Acts of the Forty-eighth General Assembly, chapter 120, 1939) through the consolidation of several departments and divisions to assist coordination among the law enforcement agencies at all levels of government within Iowa.

The department of public safety is primarily a law enforcement agency with the responsibility to enforce state laws and also has other administrative duties.

**661—1.2(17A) Organization.** The department of public safety is administered by a commissioner who is appointed by and serves at the pleasure of the governor. Bureaus which provide planning and staff support, administer governor's traffic safety programs, conduct staff inspections and investigate complaints against officers of the department report directly to the commissioner. The rest of the department is divided into the following eight divisions: administrative services, state patrol, capitol security, communications, fire marshal, criminal investigation, state medical examiner, and narcotics enforcement.

**1.2(1)** The administrative services division, through its bureaus, provides primary support services to all line elements in the general field of business administration, data processing, collections, and office management.

**1.2(2)** The division of state patrol is a law enforcement agency that primarily regulates the orderly flow of traffic on the state's highways, and responds to local law enforcement agencies' requests for emergency assistance. Peace officer members of this division have a duty to detect and apprehend criminals and enforce all state laws. Iowa Code section 321.2 imposes motor vehicle law enforcement duties upon this division and the commissioner may and does assign to this division other law enforcement responsibilities.

This division also assigns officers to the promotion of motor vehicle and other safety education, and will provide emergency transportation of substances needed by doctors, veterinarians, or hospitals, and support security for special events. Any citizen requesting such services may contact division or district headquarters, the addresses for which are listed in this chapter.

This division is also responsible for the highway emergency long-distance phone (HELP). Anyone calling 1-800-525-5555 from anywhere in Iowa will be connected with someone at the district headquarters in Des Moines who will try to provide immediate assistance.

**1.2(3)** The division of capitol security is a law enforcement agency which performs police and security work, regulates the orderly flow of traffic, and preserves the peace in and around the seat of state government and at Terrace Hill.

**1.2(4)** The communications division provides total police communications to the public safety sector including the department of public safety, police departments, sheriffs' offices, and other local state and federal criminal justice agencies.

**1.2(5)** The fire marshal division is responsible for the promotion and enforcement of fire safety, fire protection, elimination of fire hazards, and the enforcement of laws, rules and regulations concerned with fire prevention, such as the storage, transportation, handling, and use of inflammable liquids, combustibles, explosives, and liquid petroleum gas, and inspection of electric wiring, heating, and adequate fire exits for public buildings.

This division is also responsible for investigation into the cause, origin and circumstances of fires and the enforcement of all laws relating to the suppression of arson and apprehension of those persons suspected of arson. These functions are performed through the bureau of fire prevention and the bureau of arson and explosives.

**1.2(6)** The division of criminal investigation is a law enforcement unit that conducts criminal investigations, enforces Iowa's beer and liquor laws under Iowa Code chapter 123, pari-mutuel laws

under Iowa Code chapter 99D, and lottery laws under Iowa Code chapter 99E, maintains the state's central repository for all criminal history records, and operates the state criminalistics laboratory.

**1.2(7)** The division of state medical examiner provides assistance, consultation and training to county medical examiners and law enforcement officials, keeps records concerning deaths or crimes requiring investigation by this division. The state medical examiner receives reports of deaths in Iowa affecting the public interest and may require autopsies.

**1.2(8)** The division of narcotics enforcement has statewide primary responsibility for providing investigative law enforcement relating to narcotics and other controlled substances. Assistance is provided to county and city agencies by providing related intelligence information, special purpose investigative moneys and investigative assistance and training.

**661—1.3(17A) Offices.**

**1.3(1)** Principal office. The principal office for the department is that of the commissioner in the Wallace State Office Building in the Capitol Complex in Des Moines. Its mailing address is the Department of Public Safety, Wallace State Office Building, Des Moines, Iowa 50319.

**1.3(2)** Division offices. The principal offices of the divisions of the department are also located in the Wallace State Office Building.

**1.3(3)** Addresses of district headquarters, fire marshals, radio stations and other offices located outside the principal headquarters may be obtained at the Department of Public Safety's principal office in the Wallace State Office Building.

**661—1.4(17A) Methods by which and location where the public may obtain information or make submissions or requests.**

**1.4(1)** Persons wishing to obtain information from or report information to the department may contact any of the offices in 1.3(17A).

**1.4(2)** Those wishing to make submissions to the department may do so by delivering or forwarding to the administrative services division of the department, the principal offices of the affected division or, if the subject matter is relevant to a specific geographical location, the nearest office as listed in 1.3(17A).

**1.4(3)** Those making requests of the department may submit such request to the administrative services division or the principal office of the division that would provide the information or as may otherwise be provided in these rules.

**1.4(4)** Communication of information regarding conflicts with the department, declaratory rulings or rules or initiation of rule making by the department shall be directed to the administrative services division as provided in 661—Chapter 10.

**1.4(5)** Accident reports filed as required by Iowa Code section 321.266 and which are retained by the department are available to any party to an accident, the party's insurance company or its agent, or the party's attorney on written request and the payment of a $4 fee for each copy, paid to the department of public safety. Such request shall be made to the state patrol district headquarters in the district in which the accident occurred.

**1.4(6)** Reports by the Iowa state patrol division concerning motor vehicle accidents regarding observations, measurements, and examinations of physical evidence including photographs may be made available to any party to the accident or the party's legal representative or insurance company if the investigation of the accident is complete and the release of the information will not interfere with appropriate criminal proceedings or future investigations.

**1.4(7)** Records of the department subject to inspection under the Iowa public records Act, Iowa Code chapter 22, which are not privileged under Iowa Code section 622.11, or are not required or permitted to be held in confidence by Iowa Code chapter 692, or other applicable provisions of law, may be examined in the offices of the department in accordance with the provisions of the Iowa public records Act and these rules.

This rule is intended to implement Iowa Code chapters 17A and 80 and section 321.271.

**661—1.5** Rescinded, effective March 6, 1986.

**661—1.6(17A) Legal advice.** The attorney general of the state provides legal advice to the commissioner and employees of the department.

**661—1.7(17A) Surety companies.** When the Iowa Code requires the commissioner to approve a corporate surety company, approval by the insurance division of the Iowa department of commerce shall be required, and if that approval has been acquired and is continuing, the commissioner's approval will be extended.

**661—1.8(17A) Construction of rules.** All of the rules of the commissioner and the department are promulgated to describe the department and its procedure, to elaborate on or define some statutory language and to regulate some activities. Each of the sections of chapter 4 of the Iowa Code are hereby adopted by reference so as to apply when construing these rules. When the words "statutes" or "general assembly" appear in chapter 4, it is intended the words "rules" and "commissioner" are to be inserted in lieu thereof. Each of the sections of chapter 4 are adopted by reference at least so far as is applicable and not inconsistent with the intent of these rules or repugnant to the context of these rules.

These rules are intended to implement Iowa Code section 17A.3.

[Filed June 30, 1975]
[Filed 6/7/79, Notice 5/2/79—published 6/27/79, effective 8/2/79]
[Filed 12/16/83, Notice 9/14/83—published 1/4/84, effective 2/9/84]
[Filed 1/10/86, Notice 11/20/85—published 1/29/86, effective 3/6/86]
[Filed 4/1/88, Notice 9/23/87—published 4/20/88, effective 5/25/88]

# CHAPTER 2
# BAIL ENFORCEMENT, PRIVATE INVESTIGATION AND PRIVATE SECURITY BUSINESSES

[Prior to 4/20/88, see Public Safety Department [680] Ch 2]

Rescinded IAB 11/23/05, effective 1/1/06

# CHAPTER 3
# SHERIFF'S UNIFORMS

[Appeared as rules 2.200 to 2.209 prior to 6/27/79]
[Ch 3 as appeared prior to 6/27/79 rescinded with the exception of rule 3.13 renumbered at 7.1 to 7.5]
[Prior to 4/20/88, see Public Safety Department, [680] Ch 3]

**661—3.1(17A,331) General provisions.** These rules are adopted to designate the color and design of the standard uniform that each Iowa sheriff and deputy sheriff shall wear when in uniform and accessories.

**3.1(1)** The specifications of the uniforms and accessories, such as fabric and style, are made available to the department of general services. These details are not reproduced in these rules because some minor details may change due to unavailability of certain materials, but a copy of these specifications is available at the commissioner's office.

**3.1(2)** Persons wanting to enter bids on the sheriffs' uniforms and accessories should contact the department of general services. The department of general services will provide the specifications for the uniforms and accessories.

**661—3.2(17A,331) Trousers.** The trousers shall be sage green in color, have a one-inch strip of material the same color as the shirts down the outside seam of each pant leg, have seven one-inch belt loops with no cuffs, no watch pocket or billy pockets and no flaps on the rear pockets.

**661—3.3(17A,331) Shirts.** The shirts shall be of two styles, long and short sleeved with two-breasted pockets pleated with three-pointed flags and corners that snap. The shoulder ornaments shall be of the same material and color as the trousers.

The short-sleeved shirt shall have a sport collar and no V notch or hemmed cuffs.

**661—3.4(17A,331) Hats.** There shall be four types of hats:

Winter hat. The winter hat shall be sage green in color with a swivel strap, three-inch brim and will be worn with a gold metallic acorn cord.

Summer hat. The summer hat shall be sage green in color with a swivel strap, three-inch brim, and metal eyelet for a badge.

Winter fur hat. The winter fur hat shall be sage green in color with sage green fur trim and have waterproofed quilted lining.

Cap. The cap shall be green in color and of ridgeway style.

**661—3.5(17A,331) Ties.** The ties shall be sage green in color and be three and one-half inches at the widest point. The ties shall be of the clip-on style with extra long plastic wings to go under the collar.

**661—3.6(17A,331) Raingear.** Raingear shall consist of a raincoat, rainhats, and rubber footwear.

Raincoat. The raincoat shall be forest green in color and be reversible to international orange and have two zipped vents on each side for a weapon.

Rainhat. The rainhats shall fit both the summer and winter hat and be made of vinyl film.

Rubber footwear. The rubber footwear shall be black in color and be either zipper overshoes or low-cut rubbers.

**661—3.7(17A,331) Shoes and boots.** The shoes and boots shall be black in color, and be plain, round-toed style.

**661—3.8(17A,331) Gloves.** The gloves shall be black capeskin and for winter, lined.

**661—3.9(17A,331) Jackets.** There shall be three types of jackets.

Light duty jacket. The color shall be sage green and the jacket shall be waist length with elastic in the waistband. It shall zip up the front and the coat style sleeves shall have no buttons on the cuffs. The shoulder straps shall be of the same material as the jacket and be sewed down.

Ike-type dress jacket. The color shall be pink tan to match the shirt and the jacket shall have plain coat sleeves, zip up the front and have zip side vents for a weapon.

Reefer-type car jacket. The color shall be sage green and the jacket shall have a permanent liner with inside pockets, be single breasted of midlength, have a two-way zipper down the front, two breast flap pockets, two lower slash pockets, and two zippered side vents, one on each side.

The uniform shall also include socks, blazers with slacks to match and a jumpsuit.

**661—3.10(17A,331) Accessories.** Accessories shall consist of shoulder and blazer emblems, safety helmets, badges, whistle and chain, name bar, ID badge case, handcuffs and case, firearms and holsters, tie accessories, chemical mace and holder, nightsticks, rank insignia, equipment belt, reversible style inner belt, baton holder, key strap, cartridge case and clip holder.

These rules are intended to implement Iowa Code sections 331.322 and 331.657.

[Filed 6/30/75]

[Filed 6/7/79, Notice 5/2/79—published 6/27/79, effective 8/2/79]

[Filed 4/1/88, Notice 9/23/87—published 4/20/88, effective 5/25/88]

# CHAPTER 4
# WEAPONS

[Appeared as rules 2.300 to 2.305 prior to 6/27/79]
[Rules 4.1, 4.2, 4.4 and 4.7 as appeared prior to 6/27/79 rescinded, 4.3 renumbered as 11.1 to 11.7, 4.5 renumbered as 12.1 to 12.11, 4.6 renumbered as 13.1 to 13.16]
[Prior to 4/20/88, see Public Safety Department, 680—Ch 4]

## DIVISION I
## WEAPONS PERMITS

Rescinded IAB 5/9/07, effective 7/1/07; see 661—Chapter 91.

## DIVISION II
## DISPOSITION OF SEIZED AND FORFEITED WEAPONS AND AMMUNITION

Rescinded IAB 5/9/07, effective 7/1/07; see 661—Chapter 95.

# CHAPTER 5
# FIRE MARSHAL ADMINISTRATION

[Ch 5 as appeared in July 1974 IDR Supplement, rescinded June 30, 1975]
[Prior to 4/20/88, Public Safety Department [680] Ch 5]

## GENERAL PROVISIONS

**661—5.1(100) Description.** This division's charter is to prevent fires. Fire causes are determined and communicated to the public by various means including the division's annual report. The division requires building standards necessary for fire safety and apprehends those who violate such standards or fire-related criminal statutes.

**5.1(1)** The division's administrator is entitled the state fire marshal. The fire marshal has one assistant. The nonclerical employees of this division are peace officers designated as special agents, fire prevention inspectors, fire prevention specialists, and designated subordinates.

**5.1(2)** Special agents examine a fire or a fire scene to determine its cause, and arrest any who unlawfully cause fires or violate fire-related laws.

**5.1(3)** Inspectors examine buildings to determine the compliance of its system with applicable laws or rules.

**5.1(4)** A fire prevention specialist examines blueprints and specifications of proposed buildings.

**5.1(5)** Variance from rules. Rescinded IAB 10/31/01, effective 1/1/02.

**661—5.2(17A,80,100,101,101A) Definitions.** The following definitions apply generally to the provisions of this chapter unless a specific exception is made with reference to a particular rule or sequence of rules within the chapter.

*"Basement"* means a usable or unused floor space not meeting the definition of a "story."

*"Building"* is any structure used for or intended for supporting or sheltering any use or occupancy. Each portion of a building separated by one or more area separation walls with a fire-resistive rating of at least two hours may be considered a separate building.

*"Corridor"* means an enclosed exit access component that defines and provides a path of egress travel to an exit.

*"Fire"* includes explosions in which fire, combustion or rapid oxidation is an element but does not include explosions caused by nonflammable gases, liquids or other materials.

*"Fire marshal"* means the fire marshal, the assistant fire marshal, fire prevention inspectors, special agents, fire prevention specialist and designated subordinates.

*"Fire marshal's office"* means the headquarters of the fire marshal.

*"NFPA"* means the National Fire Protection Association, Batterymarch Park, Quincy, MA 02269. References to the form "NFPA xx," where "xx" is a number, refer to the NFPA standard or pamphlet of the corresponding number.

*"Owner"* (For service of notice, criminal sanctions and penalties.) If a building is owned by a corporation, the chairperson or president of the board of directors is considered the owner. If a building is owned by an organization governed by a board of trustees, the president or chairperson of the board is considered the owner. If a partnership is shown to be the owner of a building, any partner is considered the owner. If an individual is shown to be the owner, the individual, or the guardian or conservator of such individual is considered to be the owner. If the building is shown to be owned by a trade name, the person who registered the trade name is considered the owner.

*"Story"* means that portion of a building included between the upper surface of any floor and the upper surface of the floor next above, except that the topmost story shall be that portion of a building included between the upper surface of the topmost floor and the ceiling or roof above. If the finished floor level directly above a usable or unused underfloor space is more than 6 feet above grade for more than 50 percent of the total perimeter or is more than 12 feet above grade at any point, such usable or unused underfloor space shall be considered as a story.

**661—5.3(17A,100) Building plan approval.** Plans for the proposed construction of certain new buildings or additions, alterations or changes to existing buildings require the approval of the fire marshal. Plans for initial construction or alterations, changes, additions, renovations or remodeling of the following shall be submitted to the fire marshal for approval, unless the plans have been submitted to a local fire or building department for approval based upon compliance with the rules of the fire marshal or a local fire ordinance recognized in rule 661—201.4(100):

- Any educational building or facility serving kindergarten through twelfth grade,
- Any college or university building or facility,
- Any child care facility intended to serve seven or more children at one time,
- Any correctional facility, or
- Any gaming facility.

Plans for initial construction or alterations, changes, additions, renovations or remodeling of the following shall be submitted to the department of inspections and appeals and are not required to be submitted to the fire marshal:

- Adult day services, or
- Assisted living facilities.

Plans for initial construction or alterations, changes, additions, renovations or remodeling of any building or facility subject to the provisions of 661—Chapter 205 shall be submitted to the fire marshal.

**5.3(1)** An initial evaluation or review by the fire marshal may be obtained on preliminary plans by submitting the plan that shows the building outline with rooms, corridors and exits indicated. The fire marshal informally responds to such preliminary plan.

**5.3(2)** Building plan submittals.

*a. Working plans and specifications.* When approval of building construction projects is required by this chapter or when requested by the submitter for other building construction projects covered by this chapter, one complete set of the final working plans and specifications shall be submitted to the fire marshal's office. The submittal shall comply with Iowa Code chapters 542B and 544A. The submittal is examined and submitter is notified of the findings. If the working plans and specifications comply with this chapter, an approval letter shall be sent to the submitter.

*b. Shop drawings.* Shop drawings, equipment specifications and supporting documentation for fire alarm and sprinkler systems may be submitted for review and approval. If the system is being installed as part of a project which has been designed by an engineer or architect, the submittal shall be approved by the responsible architect or engineer prior to submittal to the fire marshal. The submittal is examined and submitter is notified of the findings. If the submittal complies with the applicable standards, all copies are stamped approved and one copy is retained and the other copies, if any, are returned to the submitter. If only one copy of shop drawings, equipment specifications and supporting documentation is received, a letter shall be sent to the submitter in lieu of returning approved shop drawings.

*c. Changes.* No changes shall be made to the approved final working plans and specifications or shop drawings unless the changes are submitted to and approved by the fire marshal's office.

EXCEPTION: Submittal of working plans and specifications or shop drawings is not required when the plans and specifications or shop drawings have been reviewed for compliance with this chapter by the chief, or an employee authorized by the chief, of a fire department organized under Iowa Code chapter 400.

NOTE: Building, planning and design services are required to be in conformance with Iowa Code chapters 542B and 544A.

**5.3(3)** If the blueprints and specifications are not acceptable, the fire marshal's office specialist notifies the submitter of the deficiencies and requests that the submitter either forward changes or request a review of the blueprints and specifications with the specialist.

**5.3(4)** If, after such review, the submitter disputes the specialist's findings, the submitter may request that the disputed questions be referred to the national fire protection association or other similar generally recognized authority, at the submitter's expense, and the specialist submits the blueprints and specifications to the national fire protection association or other similar generally recognized authority for their analysis.

**5.3(5)** If the submitter disputes the findings of the national fire protection association, the submitter may appeal to the fire marshal under the procedures of 661—Chapter 10.

**5.3(6)** For any construction project requiring approval of the state fire marshal, construction shall not begin until such approval has been received.

NOTE: It is recommended that approval of the fire marshal be obtained prior to the release of bid documents.

**661—5.4(17A,100,101,101A) Inspections.** Certain buildings as designated in the Iowa Code shall comply with the Iowa Code and fire safety rules. The fire marshal determines and enforces such compliance. To do so, the fire marshal may enter such building or premises at any time without notice to inspect it.

**5.4(1)** Such inspection may be of a particular system in the building. For example, the electrical, heating, exit, valve, piping and venting systems may be inspected. The inspection may include the entire building. For example, the building may be so dilapidated as to be especially liable to fire.

**5.4(2)** Such inspection is conducted by the fire marshal or by a consultant as requested by the fire marshal. A consultant would be a person with the necessary degree of training, education or experience to examine a system within a building required to be in compliance with the law or rules and determine if such system or systems is in compliance with such requirements.

**5.4(3)** Inspections are conducted without announcement and occur on a random basis, upon anyone's request, upon any complaint or when fire appears to be possible. For example, the presence of flammable liquids or gases or the odor thereof outside a building storing such gases or liquids may cause an inspection.

**5.4(4)** When the member or consultant arrives at the building that is to be inspected, the member or consultant usually advises the owner. If a person in such a position cannot be contacted, the inspection commences anyway. If the owner or representative wishes to accompany the member or consultant, they may do so, but the inspection is not delayed.

**5.4(5)** The member or consultant examines the system or systems being inspected to determine compliance with the laws or rules. To guide the inspection, the member or consultant uses state rules or a manual recommended by the national fire protection association or a similar acceptable fire protection agency.

**5.4(6)** Upon completion of an inspection, the member or consultant completes written inspection orders. The original is filed in the fire marshal's office by county; a copy is filed in the member's office in a geographical area file; and a copy is left with the fire department having jurisdiction.

**5.4(7)** Upon completion of the inspection, if the building does not comply with applicable laws or rules, the member or consultant identifies specifically such noncompliance and notifies the owner. The owner may be ordered to correct or repair the deficiency or may order the building removed or demolished.

*a.* Copies of the notice of deficiencies or order are distributed to the fire marshal's office and the fire department having jurisdiction and a copy is filed in the member's office.

*b.* The time to comply with the order is determined by the member considering the likelihood of fires, the possibility of personal injury or property loss, the cost, availability of materials and labor to correct, repair, remove or demolish and other reasonable, relevant information.

*c.* If the owner of the building does not agree with the deficiency findings and order, the owner asks the fire marshal to review the order. The provisions of 661—Chapter 10 are then used.

*d.* Failure to comply with an order may incur penalties.

**661—5.5(100) Certificates and inspection fees.**

**5.5(1)** *Certificates for license.* Several Iowa statutes provide that a license to conduct certain functions cannot be issued until the fire marshal has approved the building to be used for such function. Upon receipt of a written request, the fire marshal conducts or has conducted an inspection using the procedures contained in the building inspection rule 5.4(17A,100,101,101A). Upon completion of an inspection showing the building to be in compliance, the fire marshal issues a certificate. If the building

is found to be in noncompliance, the certificate applicant may file a petition requesting a review and the same procedure is used as if an order were being requested to be reviewed. Upon completion of the review process, if the building is found to be in compliance, a certificate is then issued.

**5.5(2)** *Inspection fees.* The following fees shall apply respectively to inspections of the facilities of the types listed where a certificate of inspection from the fire marshal is required in order to obtain licensure or certification under Iowa law. The inspection fee shall be paid by check made payable to "Fire Marshal Division, Iowa Department of Public Safety" prior to the issuance of the certificate provided for in subrule 5.5(1).

*a.* The inspection fee for a health care facility licensed or seeking licensure pursuant to Iowa Code chapter 135C or a group home licensed or seeking licensure in this state is $2 per bed.

*b.* The inspection fee for an elder group home certified or seeking certification pursuant to Iowa Code chapter 231B or an assisted living facility licensed or seeking licensure pursuant to Iowa Code chapter 231C is $7.50 per bed.

*c.* The inspection fee for an adult day services program certified or seeking certification pursuant to Iowa Code Supplement chapter 231D is $50 per facility.

*d.* The inspection fee for a child care facility licensed or seeking licensure pursuant to Iowa Code chapter 237A is $20 per facility.

*e.* When an initial inspection which requires a fee pursuant to paragraphs *"a," "b,"* or *"c"* of this subrule results in a finding of a deficiency or deficiencies which require a reinspection, the initial reinspection shall be performed without the imposition of any additional fee. If the original deficiency or deficiencies have not been corrected at the time of the initial reinspection, then a fee of $100 for each additional reinspection after the initial reinspection is required until the original deficiency or deficiencies have been corrected.

*f.* The fee for a suitability inspection of a prospective site for a facility which may seek licensure or certification from the state of Iowa is $100.

This rule is intended to implement Iowa Code chapter 100 as amended by 2000 Iowa Acts, House File 2552.

**661—5.6(17A,80,100) Fire investigations.**

**5.6(1)** The fire marshal has the authority to investigate any fire in the state of Iowa.

**5.6(2)** City and township officers have the primary responsibility to and shall investigate fires. The city or township officer shall file a report of each fire with the fire marshal's office within one week of the fire even if the fire marshal's division participated in, assisted with, directed or supervised the fire investigation. Upon written request, the fire marshal may grant an extension of the time for filing this report for a period not to exceed 14 days. The request shall set forth compelling reasons for such extension.

**5.6(3)** The city or township officer shall immediately report a fire that involves death or suspected arson and does so by contacting the member assigned to that area or, if not available, the fire marshal's office or the fire marshal or assistant or, if no such contact can be made, the officer asks the county sheriff to relay the information to the Iowa police radio or teletype system (patrol communications division). The officer's report will be recorded or logged.

**5.6(4)** The notice of a fire involving death or arson contains the following information, if known:

*a.* If death has occurred or is suspected, the name, age and address of person or persons deceased or missing; the date, time and address of the fire; and the suspected cause of fire.

*b.* If arson is suspected, the date, time, address of the fire; the reasons for suspecting arson; whether there is obvious evidence of arson and if there is an arson suspect.

*c.* Whether an explosion occurred.

**5.6(5)** If Iowa police radio has been so notified, it immediately notifies the fire marshal or the nearest available member of the fire marshal's division.

**5.6(6)** The fire marshal may, while investigating the cause of a fire, compel witnesses and others to testify under oath and to submit books, records and other documents.

*a.* This is in the discretion of the fire marshal and may be exercised anytime, including fires that involve an extensive loss, a death, arson or explosion, or suspected arson.

*b.* The fire marshal may allow a person to submit to a polygraph examination.

**5.6(7)** The fire marshal notifies the person compelled to give testimony or information.

**5.6(8)** The fire marshal may assist a local officer in the investigation of any fire. The fire marshal may superintend, direct or conduct the investigation of a fire and may request the participation of a consultant when:

*a.* Requested by state or local authority to do so.

*b.* A death has occurred, an extensive amount of property has been destroyed, arson is suspected or an explosion has occurred.

*c.* A person is identified as an arson suspect.

*d.* There is obvious physical evidence of arson.

*e.* The fire marshal deems it necessary.

**5.6(9)** The fire marshal, when participating in the investigation of a fire, may request the person in control of the premises to execute a consent to search.

**661—5.7(17A,101A) Explosive materials.** Those wishing to receive an explosive materials commercial license may obtain a copy of the required application by contacting the fire marshal's office, sheriff's office or the office of the chief of police in cities of over 10,000 people.

**5.7(1)** Such application is submitted to the sheriff's office or office of the chief of police. That agency reviews the application, investigates the applicant, inspects the buildings, if necessary, and completes the application, then forwards it to the fire marshal.

*a.* If the application is approved, the fire marshal enters approval thereon, notifies the local agency, and issues the license.

*b.* Explosive materials commercial license expires on December 31 of each year and may be renewed.

*c.* If an application is denied, the applicant may appeal under 661—Chapter 10.

**5.7(2)** A person wishing to purchase, possess, transport, store or detonate explosive materials shall obtain a permit to do so from the county sheriff or the chief of police.

**5.7(3)** When a sheriff confiscates explosive materials, the sheriff shall give notice to the state fire marshal's office as soon as reasonably possible.

**661—5.8(100,101,101A) Fire drills.** All public and private school officials and teachers shall conduct fire drills in all school buildings as specified in Iowa Code section 100.31 when school is in session. All doors and exits of their respective rooms and buildings shall remain unlocked during school hours or when such areas are being used by the public at other times.

**661—5.9(17A,100) Fire escapes.** Upon receipt of a written communication from an owner appealing the action or requirement of any fire escape inspector that sets forth such action or requirement and the objections the owner has to the action or requirement of such inspector, the provisions of 661—Chapter 10 will apply.

**661—5.10(17A,22,100,692) Public inspection of fire marshal files and fire records.** The fire marshal's office keeps a record on file of every reported fire in Iowa. All other important written information gathered by the fire marshal also is filed. Most of the contents of these documents are available to the public. Some of the information contained in these files, such as investigative data, intelligence data or criminal history data, as defined in Iowa Code chapter 692, is not public record. Requests for information should be addressed to the Fire Marshal Division, Iowa Department of Public Safety, 401 S.W. 7th Street, Suite N, Des Moines, Iowa 50309.

**5.10(1)** A person may request to examine or copy a public record by either submitting a request in person or in writing. A person who plans to make a request in person to examine public records should

first contact the office by telephone at (515)281-5821 to determine if personnel will be available to assist the person.

**5.10(2)** A copy will be provided on request of any public record in the possession of the fire marshal division at the expense of the person requesting the copy of the record. The fee for a copy of a record shall reflect only the cost of copying the record and the time required of staff of the department of public safety to retrieve the record, copy the record, supervise the copying of the record, and mail the record.

**5.10(3)** If a person wishes a copy of the record of a particular fire, it may be copied in the fire marshal's office or that person may so request by writing to the fire marshal's office setting forth the date, time and address, including county, of the fire. The fire marshal will forward a copy of the public record and may require reimbursement for the actual cost of copying and mailing the information.

**661—5.11(17A,80,100) Information requested before inspection.** Persons requesting the inspection of a building that is alleged to require repair, removal or demolition under Iowa Code section 100.13 shall provide the following information, if known: the address of the building; the name and address of the building's owner; the requester's name, address and telephone number; and a general description of the alleged deficiencies which the requester seeks remedied.

**5.11(1)** *Initial determination.* The fire marshal, upon receipt of the information, shall make an initial determination whether there are sufficient allegations to warrant an inspection.

*a.* If, in the fire marshal's opinion, the complaint fails to warrant conducting an inspection, the fire marshal shall then so advise the complainant.

*b.* If the fire marshal determines that an inspection is warranted, the fire marshal will so advise the county attorney, the requester and person(s) identified as the owner(s).

**5.11(2)** *Cause to be inspected.* The fire marshal shall then cause the inspection of the building to determine if:

*a.* By want of proper repair, or by reason of age and dilapidated condition, it is especially liable to fire and is so situated as to endanger other buildings, property or persons, or

*b.* It contains combustibles, explosives or flammable materials dangerous to the safety of any buildings, premises or persons.

**5.11(3)** *Final decision.* Upon completion of the inspection the fire marshal shall then decide if the building needs to be removed or repaired.

*a.* If the building complies with applicable laws or rules and no deficiencies are found, the fire marshal shall accordingly notify the county attorney, the owner and the requester.

*b.* If any deficiencies are found, and the building is within the corporate limits of a city, the fire marshal shall then notify the mayor and clerk of said city of the deficiencies and the need for repairs or removal.

*c.* If any deficiencies are found, and the building is within the corporate limits of a city, the fire marshal shall then identify specifically such deficiencies and prepare an order to correct or repair the deficiencies or remove or demolish the building. Such notice and order should be sent to the county attorney with a request that the notice and order be examined by the county attorney.

NOTE: An owner who receives an order from the fire marshal may appeal the order using procedures established in 661—Chapter 10.

**5.11(4)** *Verification of legal description.* The county attorney shall, upon receipt of the fire marshal's notice and order, verify the legal description and identification of the property owner and shall advise the fire marshal how to properly serve the order.

**5.11(5)** *Contents of order.* This order shall notify the owner of the building that the order becomes effective upon its receipt or issuance. The order shall also notify the owner that, within five days after the order's effective date, the owner may file a petition for review of the order in accordance with Iowa Code section 100.14.

**5.11(6)** *Who shall be served.* If the county attorney deems it appropriate, any occupants, lienholders or lessees shall be served with a copy of the order.

**5.11(7)** *Reasonable time to comply.* The order shall give the owner a reasonable time to comply with its mandate(s). The fire marshal shall determine what constitutes a reasonable time by considering the

likelihood of fires, the possibility of personal injury or property loss, the cost, availability of materials and labor to correct, repair, remove or demolish the building and other reasonable, relevant information.

**5.11(8)** *Reinspection.* If the owner of the building elects not to challenge the fire marshal's order, the fire marshal shall then, at the end of the period during which compliance was required, conduct another inspection of the building.

*a.* If the fire marshal finds that the order has been complied with, the fire marshal shall notify the county attorney, owner and requester of this fact.

*b.* If the fire marshal finds that the order has not been complied with, the fire marshal will notify the county attorney of noncompliance.

NOTE: An owner who receives a notice of noncompliance from the fire marshal may appeal the notice using procedures established in 661—Chapter 10.

**5.11(9)** *Failure to comply.* Upon receipt from the fire marshal of the owner's failure to comply, the county attorney shall:

*a.* Institute the procedure necessary to subject the owner to a penalty of $10 for each day the owner fails to comply, and

*b.* Confirm the legal description of the property, the owner's name and address, the alleged deficiencies of the building, that an inspection was conducted, that some deficiency was found, that the owner was properly served, notified and given an adequate opportunity to repair the deficiency, and that the deficiency has not been remedied and may, therefore, advise the fire marshal that the destruction is appropriate at this time.

**5.11(10)** *Final action taken.* The fire marshal, upon the advice of the county attorney, may repair, remove or destroy the building. Such destruction may occur by:

*a.* Permitting the local fire service to burn the building as a training exercise;

*b.* Asking for public bids on the building;

*c.* If significant costs are anticipated, the fire marshal may request funds from the Iowa executive council.

**661—5.12(17A,80,100A) Sharing of insurance company information with the fire marshal.** Insurance companies shall provide the specified information to the fire marshal as follows:

**5.12(1)** Whenever an insurance company has reason to believe that a fire loss insured by the company was caused by something other than an accident, said insurance company shall provide to the fire marshal, or some other agency authorized to receive such information under Iowa Code chapter 100A, all information and material possessed by said company relevant to an investigation of the fire loss or a prosecution for arson.

**5.12(2)** Whenever the fire marshal, or an agent or employee of the fire marshal, requests in writing that an insurance company provide information in its possession regarding a fire to the fire marshal, the insurance company shall provide all relevant information requested. Relevant information may include, but need not be limited to:

*a.* Insurance policy information relating to a fire loss under investigation including information on the policy application.

*b.* Policy premium payment records.

*c.* History of previous claims made by the insured.

*d.* Material relating to the investigation of the loss, including the statement of any person, proof of loss, and other information relevant to the investigation.

**5.12(3)** Unless otherwise expressly limited any request for information under this rule shall be construed to be a request for all information in the possession of an insurance company. Any information in the custody or control of any agent, employee, investigator, attorney or other person engaged by an insurance company, on a permanent or temporary basis, in the person's professional relationship to the insurance company shall be considered to be in the possession of the insurance company subject to this rule.

**661—5.13(17A,80,100A) Release of information to an insurance company.** An insurance company which has provided fire loss information to an authorized agency pursuant to Iowa Code section 100A.2 may request information relevant to said fire loss investigation from the fire marshal. If the insurance company has provided information to an authorized agency other than the fire marshal, the request shall include proof that information was provided. For purposes of this rule the term insurance company shall include an attorney, adjustor or investigator engaged by the company in reference to the particular fire loss involved in the request even though the attorney, adjustor or investigator is not a full-time employee of the insurance company. The attorney, adjustor or investigator shall provide the fire marshal with proof of authorization from the insurance company to act as its representative relative to the loss.

**661—5.14(17A,80,100A) Forms.** These rules require the use of the following forms that are available from the commissioner or the state fire marshal.

**5.14(1)** When an insurance company has reason to believe that a fire loss has occurred, the company shall notify the fire marshal on the form entitled "Insurance Form Number One."

**5.14(2)** Requests for information by the fire marshal, the fire marshal's agents or employees from an insurance company pursuant to Iowa Code section 100A.2 shall comply with the form entitled "Insurance Form Number Two."

**5.14(3)** Material requested on Insurance Forms Number One and Two shall carry a cover form which complies with "Insurance Form Number Three."

**5.14(4)** Request for information by an insurance company from the fire marshal shall comply with "Insurance Form Number Four."

**661—5.15(17A,100) Waivers, variances, and exceptions.** This rule outlines generally applicable standards and a uniform process for the granting of individual waivers from rules of the state fire marshal in situations where no other more specific procedure provides for waivers. To the extent another more specific provision of law governs the issuance of a waiver from a particular rule, the more specific provision shall supersede this rule with respect to any waiver from that rule.

*"Rules of the state fire marshal"* means any rules adopted pursuant to rule-making authority assigned to the fire marshal, including but not limited to rules adopted pursuant to Iowa Code section 100.1, 100.35, 100B.10, 100C.7, 101.1, 101.23, or 101A.5, or to implement any provision of Iowa Code chapter 100, 100A, 100B, 100C, 101, or 101A, or any other reference in an Iowa statute to rule making by the fire marshal or establishment of fire safety standards or requirements by the fire marshal.

NOTE: As of February 1, 2006, the following chapters are "rules of the state fire marshal": 661—Chapters 5, 51, 53, 205, 231, 251, 259, and 291.

*"Waiver"* or *"variance"* means an action by the fire marshal which suspends, in whole or in part, the requirements or provisions of a rule as applied to an identified person on the basis of the particular circumstances of that person. For simplicity, the term "waiver" shall include both a "waiver" and a "variance."

**5.15(1)** Applicability of rule. The fire marshal may grant a waiver from a rule only if the fire marshal has jurisdiction over the rule and the requested waiver is consistent with applicable statutes, constitutional provisions, or other provisions of law. The fire marshal may not waive requirements created or duties imposed by statute.

**5.15(2)** Criteria for waiver or variance. In response to a petition completed pursuant to this rule, the fire marshal may, in the fire marshal's sole discretion, issue an order waiving, in whole or in part, the requirements of a rule if the fire marshal finds, based on clear and convincing evidence, all of the following:

*a.* The application of the rule would impose an undue hardship on the person for whom the waiver is requested;

*b.* The waiver from the requirements of the rule in the specific case would not prejudice the substantial legal rights of any person;

*c.* The provisions of the rule subject to the petition for a waiver are not specifically mandated by statute or another provision of law; and

*d.* Substantially equal protection of public health, safety, and welfare will be afforded by a means other than that prescribed in the particular rule for which the waiver is requested.

**5.15(3)** Filing of petition. A petition for a waiver must be submitted in writing to the fire marshal as follows:

*a.* *License application.* If the petition relates to a license application, the petition shall be made in accordance with the filing requirements for the license in question.

*b.* *Contested cases.* If the petition relates to a pending contested case, the petition shall be filed in the contested case proceeding, using the caption of the contested case.

*c.* *Other.* If the petition does not relate to a license application or a pending contested case, the petition shall be submitted using a caption indicating the name of the entity or person for whom the waiver is requested and the location of property to which the proposed waiver would apply, if any.

*d.* *File petition.* A petition is deemed filed when it is received in the office of the state fire marshal. A petition should be sent or delivered to the Iowa State Fire Marshal, 401 S.W. 7th Street, Suite N, Des Moines, Iowa 50309.

**5.15(4)** Content of petition. A petition for waiver shall include the following information where applicable and known to the requester:

*a.* The name, address, and telephone number of the entity or person for whom a waiver is being requested; the case number of or other reference to any related contested case; and the name, address, and telephone number of the petitioner's legal representative, if any.

*b.* A description of and citation to the specific rule from which a waiver is requested.

*c.* The specific waiver requested, including the precise scope and duration.

*d.* The relevant facts that the petitioner believes would justify a waiver under each of the four criteria described in subrule 5.15(2). This statement shall include a signed statement from the petitioner attesting to the accuracy of the facts provided in the petition, and a statement of reasons that the petitioner believes will justify a waiver.

*e.* A history of any prior contacts between the department of public safety or any other agency of the state of Iowa or political subdivision and the petitioner relating to the regulated activity or license affected by the proposed waiver, including a description of each affected license or certificate held by the requester, any formal charges filed, notices of violation, contested case hearings, or investigations relating to the regulated activity or license within the last five years.

*f.* Any information known to the requester regarding actions of the fire marshal in similar cases.

*g.* The name, address, and telephone number of any public agency or political subdivision which also regulates the activity in question or which might be affected by the granting of a waiver.

*h.* The name, address, and telephone number of any entity or person who would be adversely affected by the granting of a petition.

*i.* The name, address, and telephone number of any person with knowledge of the relevant facts relating to the proposed waiver.

*j.* Signed releases of information authorizing persons with knowledge regarding the request to furnish the department with information relevant to the waiver.

**5.15(5)** Additional information. Prior to issuing an order granting or denying a waiver, the fire marshal may request additional information from the petitioner relative to the petition and surrounding circumstances. If the petition was not filed in a contested case, the fire marshal may, on the fire marshal's own motion or at the petitioner's request, schedule a telephonic or in-person meeting between the petitioner and a representative or representatives of the fire marshal related to the waiver request.

**5.15(6)** Notice. The fire marshal shall acknowledge a petition upon receipt. The fire marshal shall ensure that, within 30 days of receipt of the petition, notice of the pending petition and a concise summary of its contents have been provided to all persons to whom notice is required by any provision of law, including the petitioner. In addition, the fire marshal may give notice to other persons. To accomplish this notice provision, the fire marshal may require the petitioner to serve the notice on all persons to whom notice is required by any provision of law, and provide a written statement to the department attesting that notice has been provided.

**5.15(7)** Hearing procedures. The provisions of Iowa Code sections 17A.10 to 17A.18A regarding contested case hearings shall apply to any petition for a waiver filed within a contested case, and shall otherwise apply to department proceedings for a waiver only when the department so provides by rule or order or is required to do so by statute.

**5.15(8)** Ruling. An order granting or denying a waiver shall be in writing and shall contain a reference to the particular person or legal entity and rule or portion thereof to which the order pertains, a statement of the relevant facts and reasons upon which the action is based, and a description of the precise scope and duration of the waiver if one is issued.

*a. Fire marshal discretion.* The final decision on whether the circumstances justify the granting of a waiver shall be made at the sole discretion of the fire marshal, upon consideration of all relevant factors. Each petition for a waiver shall be evaluated by the fire marshal based on the unique, individual circumstances set out in the petition.

*b. Burden of persuasion.* The burden of persuasion rests with the petitioner to demonstrate by clear and convincing evidence that the fire marshal should exercise discretion to grant a waiver of a rule.

*c. Narrowly tailored.* A waiver, if granted, shall provide the narrowest exception possible to the provisions of a rule.

*d. Administrative deadlines.* When the rule from which a waiver is sought establishes administrative deadlines, the fire marshal shall balance the special individual circumstances of the petitioner with the overall goal of uniform treatment of all similarly situated persons.

*e. Conditions.* The fire marshal may place on a waiver any condition that the fire marshal finds desirable to protect the public health, safety, and welfare.

*f. Time period of waiver.* A waiver shall not be permanent unless the petitioner can show that a temporary waiver would be impracticable. If a temporary waiver is granted, there is no automatic right to renewal. At the sole discretion of the fire marshal, a waiver may be renewed if the fire marshal finds that grounds for a waiver continue to exist.

*g. Time for ruling.* The fire marshal shall grant or deny a petition for a waiver as soon as practicable but, in any event, shall do so within 120 days of its receipt, unless the petitioner agrees to a later date. However, if a petition is filed in a contested case, the fire marshal shall grant or deny the petition no later than the time at which the final decision in that contested case is issued.

*h. When deemed denied.* Failure of the fire marshal to grant or deny a petition within the required time period shall be deemed a denial of that petition by the fire marshal. However, the fire marshal shall remain responsible for issuing an order denying a waiver.

*i. Service of order.* Within seven days of its issuance, any order issued under this rule shall be transmitted to the petitioner or the person to whom the order pertains, and to any other person entitled to such notice by any provision of law.

**5.15(9)** All orders granting or denying a waiver petition shall be indexed, filed, and available for public inspection as provided in Iowa Code section 17A.3. Petitions for a waiver and orders granting or denying a waiver petition are public records under Iowa Code chapter 22. Some petitions or orders may contain information the fire marshal is authorized or required to keep confidential. The department may accordingly redact confidential information from petitions or orders prior to public inspection.

**5.15(10)** Summary reports. The fire marshal shall provide information regarding requests for waivers received pursuant to this rule to the agency rules administrator for inclusion in summary reports of requests for waivers as provided for in 661—subrule 10.222(10).

**5.15(11)** Cancellation of a waiver. A waiver issued by the fire marshal pursuant to this rule may be withdrawn, canceled, or modified if, after appropriate notice and hearing, the fire marshal issues an order finding any of the following:

*a.* The petitioner or the person who was the subject of the waiver order withheld or misrepresented material facts relevant to the propriety or desirability of the waiver; or

*b.* The alternative means for ensuring that the public health, safety and welfare will be adequately protected after issuance of the waiver order have been demonstrated to be insufficient; or

*c.* The subject of the waiver order has failed to comply with all conditions contained in the order.

**5.15(12)** Violations. Violation of a condition in a waiver order shall be treated as a violation of the particular rule for which the waiver was granted. As a result, the recipient of a waiver under this chapter who violates a condition of the waiver may be subject to the same remedies or penalties as a person who violates the rule at issue.

**5.15(13)** Defense. After the fire marshal issues an order granting a waiver, the order is a defense within its terms and the specific facts indicated therein only for the person to whom the order pertains in any proceeding in which the rule in question is sought to be invoked.

**5.15(14)** Appeals. Decisions of the fire marshal pursuant to this rule may be appealed to the commissioner of public safety. Provision for appeals of proposed decisions in contested case proceedings shall apply, as provided in rule 661—10.327(17A).

**5.15(15)** Judicial review. Judicial review of the department's decision to grant or deny a waiver petition may be taken in accordance with Iowa Code chapter 17A.

**5.15(16)** Sample petition for waiver. A petition for waiver filed in accordance with this chapter must meet the requirements specified herein and must either be submitted on a completed waiver request form provided by the fire marshal or substantially conform to the following form:

BEFORE THE IOWA DEPARTMENT OF PUBLIC SAFETY,
STATE FIRE MARSHAL DIVISION

| | |
|---|---|
| Petition by (name of petitioner) for the waiver/variance of (insert rule citation) relating to (insert the subject matter). | PETITION FOR WAIVER/VARIANCE |

1. Provide the name, address, and telephone number of the petitioner (person asking for a waiver or variance). Also provide the name, address, and telephone number of the petitioner's legal representative, if applicable, and a statement indicating the person to whom communications concerning the petition should be directed.

2. Describe and cite the specific rule from which a waiver is requested.

3. Describe the specific waiver requested, including the precise scope and time period for which the waiver will extend.

4. Explain the relevant facts and reasons that the petitioner believes justify a waiver. Include in the answer all of the following:

- Why applying the rule would result in undue hardship to the petitioner;
- Why waiving the rule would not prejudice the substantial legal rights of any person;
- Whether the provisions of the rule subject to the waiver are specifically mandated by statute or another provision of law; and
- How substantially equal protection of public health, safety, and welfare will be afforded by a means other than that prescribed in the particular rule for which the waiver is requested.

5. Provide a history of any prior contacts between the department, other departments or agencies of the state of Iowa, or political subdivisions and petitioner relating to the regulated activity or license that would be affected by the waiver. Include a description of each affected license held by the petitioner, any formal charges filed, any notices of violation, any contested case hearings held, or any investigations related to the regulated activity, license, registration, certification, or permit.

6. Provide information known to the petitioner regarding the fire marshal's action in similar cases.

7. Provide the name, address, and telephone number of any public agency or political subdivision that also regulates the activity in question or that might be affected by the granting of the petition.

8. Provide the name, address, and telephone number of any person or entity that would be adversely affected by the granting of the waiver.

9. Provide the name, address, and telephone number of any person with knowledge of the relevant facts relating to the proposed waiver.

10. Provide signed releases of information authorizing persons with knowledge regarding the request to furnish the fire marshal with information relevant to the waiver.

I hereby attest to the accuracy and truthfulness of the above information.

Petitioner's signature Date

This rule is intended to implement Iowa Code section 17A.22.

**661—5.16(100) Alternate requirements.** Rescinded IAB 11/22/06, effective 1/1/07.

**661—5.17** to **5.34** Reserved.

**661—5.35(100) Standards for automatic fire extinguishing systems.** Rescinded IAB 11/22/06, effective 1/1/07.

**661—5.36** to **5.39** Reserved.

**661—5.40(17A,80,100) Portable fire extinguishers—generally.** Rescinded IAB 11/22/06, effective 1/1/07.

**661—5.41(17A,80,100) Halon fire extinguishing systems—generally.** Rescinded IAB 7/19/06, effective 7/1/06.

**661—5.42(100) Cellulose insulation.** Rescinded IAB 11/22/06, effective 1/1/07.

**661—5.43** to **5.49** Reserved.

These rules are intended to implement Iowa Code chapters 100 and 100A.

[Filed 6/30/75]
[Filed 2/16/77, Notice 1/12/77—published 3/9/77, effective 4/13/77]
[Filed 2/12/82, Notice 12/9/81—published 3/3/82, effective 4/7/82]
[Filed 4/6/84, Notice 2/29/84—published 4/25/84, effective 5/31/84]
[Filed 4/1/88, Notice 9/23/87—published 4/20/88, effective 5/25/88]
[Filed 10/14/88, Notice 9/7/88—published 11/2/88, effective 12/8/88]
[Filed 2/2/89, Notice 12/28/88—published 2/22/89, effective 3/29/89]
[Filed 8/25/92, Notice 5/13/92—published 9/16/92, effective 11/1/92]
[Filed 2/24/93, Notice 12/9/92—published 3/17/93, effective 5/1/93]
[Filed emergency 6/30/00—published 7/26/00, effective 7/1/00]
[Filed 10/5/01, Notice 5/30/01—published 10/31/01, effective 1/1/02]
[Filed 9/24/03, Notice 5/28/03—published 10/15/03, effective 12/1/03]
[Filed 3/25/04, Notice 12/10/03—published 4/14/04, effective 6/1/04]
[Filed emergency 10/6/05 after Notice 8/17/05—published 10/26/05, effective 11/1/05]
[Filed emergency 1/27/06—published 2/15/06, effective 2/1/06]
[Filed emergency 6/27/06—published 7/19/06, effective 7/1/06]
[Filed 11/2/06, Notice 9/13/06—published 11/22/06, effective 1/1/07]

MEANS OF EXIT

**661—5.50(100) General requirements.** Rescinded IAB 11/22/06, effective 1/1/07.

**661—5.51(100) Exits.** Rescinded IAB 11/22/06, effective 1/1/07.

**661—5.52(100) Sprinklers in elevators.** Rescinded IAB 11/22/06, effective 1/1/07.

**661—5.53** to **5.99** Reserved.

[Filed 11/25/55]
[Filed 12/19/56]

[Filed 6/30/61]
[Filed 9/14/64]
[Filed 3/3/77, Notice 1/26/77—published 3/23/77, effective 4/27/77]
[Filed 6/22/77, Notice 5/4/77—published 7/13/77, effective 8/17/77]
[Filed 11/5/82, Notice 9/29/82—published 11/24/82, effective 12/29/82]
[Filed emergency 12/17/82—published 1/5/83, effective 12/17/82]
[Filed 4/7/83, Notice 3/2/83—published 4/27/83, effective 6/2/83]
[Filed 4/1/88, Notice 9/23/87—published 4/20/88, effective 5/25/88]
[Filed 2/2/89, Notice 12/28/88—published 2/22/89, effective 3/29/89]
[Filed 4/24/92, Notice 2/19/92—published 5/13/92, effective 7/1/92]
[Filed 2/24/93, Notice 12/9/92—published 3/17/93, effective 5/1/93]
[Filed 9/24/03, Notice 5/28/03—published 10/15/03, effective 12/1/03]
[Filed emergency 1/27/06—published 2/15/06, effective 2/1/06]
[Filed 9/20/06, Notice 7/5/06—published 10/11/06, effective 12/1/06]
[Filed 11/2/06, Notice 9/13/06—published 11/22/06, effective 1/1/07]

LIFE SAFETY REQUIREMENTS FOR EXISTING BUILDINGS

**661—5.100(100) Exits and escapes.** Rescinded IAB 11/22/06, effective 1/1/07.

**661—5.101(100) Exits.** Rescinded IAB 11/22/06, effective 1/1/07.

**661—5.102(100) Enclosure of vertical shafts.** Rescinded IAB 11/22/06, effective 1/1/07.

**661—5.103(100) Standpipes.** Rescinded IAB 11/22/06, effective 1/1/07.

**661—5.104(100) Separation of occupancies.** Rescinded IAB 11/22/06, effective 1/1/07.

**661—5.105(100) Dead-end corridors.** Rescinded IAB 11/22/06, effective 1/1/07.

**661—5.106** to **5.229** Reserved.
[Filed 4/7/83, Notice 3/2/83—published 4/27/83, effective 6/2/83][1]
[Filed 4/6/84, Notice 2/29/84—published 4/25/84, effective 5/31/84]
[Filed 4/1/88, Notice 9/23/87—published 4/20/88, effective 5/25/88]
[Filed 2/2/89, Notice 12/28/88—published 2/22/89, effective 3/29/89]
[Filed 8/25/92, Notice 5/13/92—published 9/16/92, effective 11/1/92]
[Filed emergency 1/27/06—published 2/15/06, effective 2/1/06]
[Filed 11/2/06, Notice 9/13/06—published 11/22/06, effective 1/1/07]

**661—5.230(100) High-rise buildings.** Rescinded IAB 11/22/06, effective 1/1/07.

**661—5.231** to **5.249** Reserved.
[Filed 6/22/76, Notice 5/17/76—published 7/12/76, effective 8/16/76]
[Filed 6/15/84, Notice 4/11/84—published 7/4/84, effective 8/8/84]
[Filed 4/1/88, Notice 9/23/87—published 4/20/88, effective 5/25/88]
[Filed 2/2/89, Notice 12/28/88—published 2/22/89, effective 3/29/89]
[Filed 11/26/90, Notice 8/22/90—published 12/12/90, effective 1/16/91]
[Filed emergency 1/27/06—published 2/15/06, effective 2/1/06]
[Filed emergency 6/27/06—published 7/19/06, effective 7/1/06]
[Filed 11/2/06, Notice 9/13/06—published 11/22/06, effective 1/1/07]

LIQUEFIED PETROLEUM GASES

Rescinded IAB 11/27/02, effective 1/1/03. See 661—Chapter 51.

**661—5.250** to **5.274** Reserved.

LIQUEFIED NATURAL GAS

Rescinded IAB 11/27/02, effective 1/1/03. See 661—Chapter 51.

**661—5.275** to **5.299** Reserved.

FLAMMABLE AND COMBUSTIBLE LIQUIDS CODE

**661—5.300** Reserved.

**661—5.301(100) Assembly occupancies.** Rescinded IAB 11/22/06, effective 1/1/07.

**661—5.302** to **5.349** Reserved.

[Filed emergency 10/6/05 after Notice 8/17/05—published 10/26/05, effective 11/1/05]
[Filed emergency 1/27/06—published 2/15/06, effective 2/1/06]
[Filed 11/2/06, Notice 9/13/06—published 11/22/06, effective 1/1/07]

OIL BURNING EQUIPMENT

Rescinded IAB 11/27/02, effective 1/1/03. See 661—Chapter 51.

**661—5.350** to **5.399** Reserved.

STORAGE OF FLAMMABLE AND COMBUSTIBLE LIQUIDS ON FARMS AND ISOLATED CONSTRUCTION PROJECTS

Rescinded IAB 11/27/02, effective 1/1/03. See 661—Chapter 51.

**661—5.400** to **5.449** Reserved.

TRANSPORTATION AND DELIVERY OF FLAMMABLE AND COMBUSTIBLE LIQUIDS BY TANK VEHICLES

Rescinded IAB 11/27/02, effective 1/1/03. See 661—Chapter 51.

**661—5.450** to **5.499** Reserved.

CHILD CARE CENTERS

**661—5.500(100) Definitions.** The following definitions apply to rules 661—5.500(100) to 661—5.509.

*"Approved"* is defined as being acceptable to the state fire marshal.

*"Approved equipment and material"* shall mean any equipment or material tested and listed by a nationally recognized testing laboratory.

*"Approved standards"* shall mean any standard or code prepared and adopted by a nationally recognized association.

*"Attic,"* when used in these standards, shall mean the space between the ceiling beams of the top habitable story and the roof rafters.

*"Automatic,"* as applied to a door, window or other protection for an opening shall mean that such door, window or other protection is so constructed and arranged that if open it will close when subjected to a predetermined temperature or rate of temperature rise.

*"Automatic sprinkler system"* shall mean an arrangement of piping and sprinkler designated to operate automatically by the heat of fire and to discharge water upon the fire, according to the standards of the National Fire Protection Association.

*"Basement"* or cellar for these regulations shall mean that part of a building where the finish floor is more than 30 inches below the finish grade at the building.

*"Child occupied areas"* used in this regulation for purposes of area separation, means of egress and use, as that area used for sleeping, dining, activity and educational purposes and other areas subject to occupancy by children.

*"Combustible"* shall mean capable of undergoing combustion.

*"Combustible or hazardous storage area of room"* shall mean those areas containing heating apparatus and boiler rooms, basements or attics used for the storage of combustible material, flammable liquids, workrooms such as kitchen, laundry, handicraft shops, carpenter shops, paint shops, and upholstery shops, central storerooms such as furniture, mattresses and miscellaneous storage, and similar occupancies intended to contain combustible material which will either be easily ignited, burn with an intense flame or result in the production of dense smoke and fumes.

*"Existing center"* is that which is already in existence at the date these rules go into effect.

*"Exit"* is that portion of a means of egress which is separated from all other spaces of the building or structure by construction or equipment as required in these regulations to provide a protected way of travel to the exit discharge.

*"Exit access"* is that portion of a means of egress which leads to an entrance to an exit.

*"Exit discharge"* is that portion of a means of egress between the termination of an exit and a public way.

*"Fire door"* shall mean a door and its assembly, so constructed and assembled in place as to give protection against the passage of fire, equal to surrounding construction.

*"Fire extinguisher rating"* shall be determined as stated in NFPA 10, 2006 edition, Appendix G.

*"Fire marshal"* means the state fire marshal, any of the state fire marshal's staff, or assistant state fire inspectors, carrying authorized cards signed by the state fire marshal.

*"Fire partition"* shall mean a partition which subdivides a story of a building to provide an area of refuge or to restrict the spread of fire for a minimum of one hour.

*"Fire-resistance rating"* shall mean the time in hours or fractions thereof that materials or their assemblies will resist fire exposure as determined by fire tests conducted in compliance with approved standards.

*"Fire resistive"* shall mean that property of materials or assemblies which prevents or retards the passage of excessive heat, hot gases or flames under condition of use. The term "fire resistive" shall mean the same as "fire resistance."

*"Fire wall"* shall mean a wall of brick or reinforced concrete having adequate fire resistance and structural stability under fire conditions to accomplish the purpose of completely subdividing a building or of completely separating adjoining building to resist the spread of fire. A fire wall shall extend continuously through all stories from foundation to or above the roof.

*"Floor area net"* shall be the actual occupied area not including accessory unoccupied areas or thickness of walls.

*"Interior finish material"* shall be classified in accordance with the method of tests of surface burning characteristics of building material National Fire Protection Association Standard No. 255, Test Methods, Surface Burning—Building Materials, 1969. Classification of interior finish material shall be in accordance with tests made under conditions simulating actual installations, provided that the state fire marshal may by rule establish the classification of any material on which a rating by standard test is not available. Interior finish material shall be grouped in the following classes in accordance with their flame spread and related characteristics.

Class A. Interior finish flame spread 0-25.

Class B. Interior finish flame spread 25-75.

Class C. Interior finish flame spread 75-100.

*"Mixed occupancy"* shall mean when the building is used for more than one occupancy purpose.

*"Panic hardware"* shall cause the door latch to release when pressure of not to exceed 15 pounds is applied to the releasing devices in the direction of exit travel. Such releasing devices shall be bars or panels extending not less than two-thirds of the width of the door and placed at height not less than 30 nor more than 44 inches above the floor. Only approved panic hardware shall be used on exit doors.

*"Self-closing"* shall mean to be equipped with an approved device which will ensure closing after having been opened.

*"Sprinklered"* shall mean to be completely protected by an approved system of automatic sprinklers installed and maintained in accordance with approved standards.

*"State fire marshal"* shall mean the chief officer of the division of fire protection as described in Iowa Code section 100.1 or one authorized to act in the state fire marshal's absence.

*"Story"* shall mean that part of a building comprised between a floor and ceiling or roof next above. The first story shall be that story which is of such height above the ground that it does not come within the definition of a basement or cellar.

*"Types of construction"* shall be defined in National Fire Protection Association, pamphlet No. 220, published in 1985.

*"Unduly endanger"* shall mean beyond a normal limit bring into danger or peril.

**661—5.501(100) Child care centers in mixed occupancies.**

**5.501(1)** *"Application—mixed occupancy."* All child care centers seeking licenses under Iowa Code chapter 237A, located in mixed occupancies shall meet the requirements of the primary use and occupancy of the building as promulgated by the state fire marshal. If no such rules exist the following shall be complied to and the area used for child care shall comply as per number of children occupying the center at any given time.

**5.501(2)** *"Mixed occupancy."*

*a.* *"Not meeting codes."* In facilities not meeting nationally recognized codes for child care centers the minimum division between the child occupied area and other areas shall be a one-hour fire partition and the perimeter protected with an approved fire detection or automatic extinguishing system as directed by the fire marshal. Less than a one-hour partition may be accepted when the fire marshal approves adequate perimeter protection.

*b.* *"Meeting recognized codes."* Where child care centers are located in a building containing mixed occupancies, the separation requirements of a nationally recognized code are satisfied, it shall be considered as complying to the section above.

*c.* *"Undue danger."* Child care centers shall not be in buildings of mixed occupancies where the acts of other occupants could unduly endanger the lives of the children in the child care center.

**661—5.502(100) Child care centers for seven or more children.**

**5.502(1)** *"Application."*

*a.* *"Life safety requirements."* This section establishes life safety requirements for child care centers in which seven or more children receive care.

*b.* *"Regulations shall apply to all centers."* Rules 661—5.500(100) through 661—5.502(100) shall apply to all child day care centers. Rules 661—5.500(100) through 661—5.502(100) shall constitute the minimum requirements for day care centers for approval by the state fire marshal's office. Additional requirements may be established by other governmental agencies or governmental subdivisions.

*c.* *"Time for compliance."* In existing childcare centers a reasonable time shall be allowed for compliance with any part of this rule, commensurate with the magnitude of the expenditure and the disruption of services. When alternate protection is installed and accepted the center shall be considered as conforming for the purposes of these regulations.

*d. "Additions or structural alterations."* Additions or structural alterations to existing facilities must have written approval from the state fire marshal, and working plans and specifications must be submitted for review and approval.

**5.502(2)** *"Exit details."*

*a. "Number of exits."* Each floor occupied by children shall have not less than two approved remote means of egress. Additional exits shall be determined by the number of occupants.

*b. "Basement exits."* Where children are located below the floor of exit discharge (basement) at least one exit directly to the outside to ground level shall be provided. No center shall be located more than one story below the ground. Any stairway to the floor above shall be cut by a fire barrier containing a rated door of at least 20-minute fire protection or a minimum of 1¾-inch solid bonded wood core. They shall be equipped with a self-closing device and positive latch.

*c. "Types of exits."* Exits shall be of the following types or combinations thereof as defined by the National Fire Protection Association. At least two exits of the below types, remote from each other, shall be provided for every story or section of the building. At least one exit in every story or section shall be of type 2, 3, 4, 5, or 6 as listed below. Exterior fire escape stairs, minimum of 44 inches in width, may be accepted as a second means of exit.

(1) Horizontal exits.

(2) Doors leading directly outside the buildings (without stairs).

(3) Ramps.

(4) Stairways, or outside stairs.

(5) Rescinded IAB 2/15/06, effective 2/1/06.

(6) Smoke towers.

*d. "Direct exits."* At least one required exit from each floor shall lead directly or through an enclosed corridor, to the outside. A second or third required exit, where a more direct exit is impractical, may lead to a first floor lobby having ample and direct exit to the outside.

*e. "Exit doors shall not be locked."* Exit doors shall not be locked against egress by bolt, key locks, hooks or padlocks. A latch type lock is permissible that locks against the outside entrance.

**5.502(3)** *"Doors."*

*a. "Size."* Each door in a means of egress shall not be less than 30 inches wide, 6 feet in height and reasonably covering the opening. If a door has a latch and is used by more than 50 people it shall be equipped with panic hardware.

*b. "Closet doors."* Every closet door latch shall be such that children can open the door from the inside of the closet.

*c. "Emergency unlocking."* Every door lock, except exit discharge, shall be designed to permit opening of the locked door from the outside in an emergency, and the opening device shall be readily accessible to the staff.

*d. "Doors protecting vertical openings."* The doorway between the floor of exit discharge and any floor below shall be equipped with a self-closing labeled door of at least a 20-minute fire protection rating or a 1¾-inch solid bonded wood core door.

**5.502(4)** *"Interior finish."* Interior finish in exits in child occupied spaces in the center shall be Class A in new centers and A or B in existing centers. See Table No. 5-C following 5.105(100).

**5.502(5)** *"Detection and extinguishing systems when needed."* Detection and extinguishing systems shall comply to the following chart in regard to construction and number of stories.

*a. "Chart for detection and extinguishing systems—when needed."*

Number of stories

| Type of Construction | Number of Children | 1 | 2 | 3 | 4 | 5 or more |
|---|---|---|---|---|---|---|
| Fire Resistive and Protected Noncombustible | 7-15 | 4 | 2 | 2 | 2 | 2 |
| | 16 or more | 3 | 2 | 2 | 2 | 2 |
| Protected Wood Frame and Protected Ordinary | 7-15 | 4 | 2 | 1 | NP | NP |
| | 16 or more | 3 | 2 | 1 | | |
| Heavy Timber | 7-15 | 4 | 2 | 1 | NP | NP |
| | 16 or more | 3 | 2 | 1 | | |
| Unprotected Noncombustible | 7-15 | 4 | 2 | 1 | NP | NP |
| | 16 or more | 3 | 2 | 1 | | |
| Unprotected Wood Frame and Unprotected Ordinary | 7-15 | 4 | NP | NP | NP | NP |
| | 16 or more | 2 | | | | |

Note 1—Sprinkler; Note 2—Complete Automatic Detection; Note 3—Manual Alarm; Note 4—Single Station Smoke Detection; Note 5—NP Not Permitted

"EXCEPTION:" Buildings where classrooms have a direct exit door to the outside are not required to have complete automatic detection. A manual alarm or single-station detector will be satisfactory.

*b. "Approved sprinkler system."* Any required automatic sprinkler system shall be in accordance with approved standards for systems in light hazard occupancies, and shall be electrically interconnected with the manual fire alarm system. The main sprinkler control valve shall be electrically supervised so that at least a local alarm will sound when the valve is closed.

*c. "Complete automatic detection system."* Requirements for automatic fire detection systems shall meet the following standards.

(1) Automatically detect a fire.

(2) Sound alarm signal throughout the premises for evacuation purposes.

(3) Provide assurance the system is in operating condition by electric supervision.

(4) Underwriters Laboratories listed equipment to be used throughout the system.

(5) Provide a manual test switch and tested monthly and noted for inspection purposes.

(6) Installation of equipment and wiring shall be in a neat and workmanship like manner.

(7) To include smoke, or products of combustion, detection devices when required by the fire marshal.

(8) Properly located manual alarm stations.

(9) Where fire detection systems are installed to meet the requirements of this regulation, they shall be approved electrically supervised systems. Detectors shall be approved combined rate of rise and fixed temperature type detectors 135°F, or smoke, or products of combustion type, and properly installed. In spaces where high temperature is normal, devices having a higher operating point may be used. Operation of a detection or alarm shall cause an alarm which is audible throughout the center. In existing centers where "fixed temperature only detectors" are already installed, they need not be replaced until such time that a new head needs to be installed. Detector units shall be installed in every room and concealed area of the child care center.

*d. "Single station detectors."* Every single station detector of product of combustion other than heat shall be mounted on the ceiling or wall at a point of central location in the corridor or in child occupied areas. No detector shall be mounted less than 12 inches of ceiling level. Care shall be exercised to ensure the installation will not interfere with the operating characteristics of the detectors. When activated the detector shall provide an alarm. The detectors shall be tested monthly by the operator of the center or the operator's designee and a record kept for inspection purposes.

*e. "Manual fire alarms."*

(1) "Installation." Manual fire alarm stations shall be provided on each floor and so located that the alarm station is not more than 75 feet from any area within the building. Horns or bells that provide a distinctive sound different from any other bell system shall be provided that will give audible warning to all occupants of the building in case of a fire or other emergency. A test system shall be provided for the purpose of conducting fire drills and tests of the alarm system.

(2) "Approval of systems." Factory Mutual or Underwriters Laboratories, Inc., equipment and component parts shall be used in the installation of the fire alarm system. The electrical energy for the fire alarm system shall be on a separate circuit and shall be taken off the utility service to the center building ahead of the entrance disconnect.

(3) "Extension of system." Whenever the fire marshal determines it advisable, it may be required that the fire alarm system be extended or designed to provide automatic fire detection devices in unsupervised areas, boiler rooms, storerooms and shop areas.

(4) "Mounting." Each station shall be securely mounted. The bottom of each station will be not less than 4½ feet and not more than 6 feet above the floor level.

(5) "Location." Manual fire alarm boxes shall be distributed throughout the protected area so that they are unobstructed, readily accessible, and located in the normal path of exit from the area.

**5.502(6)** *"Fire drills."* Fire drills shall be held at least once a month and recorded. A fire emergency plan shall be written and posted in a conspicuous place.

**5.502(7)** *"Extinguishers."* Each child occupied area shall be protected by a Class "A" fire extinguisher 2A rating, and in areas where heating or cooking units are used there shall be a "5" lb. BC extinguisher 2B rating.

**5.502(8)** *"Heating equipment."*

*a.* *"Location."* No furnace, space heater or portable heater shall be located in child occupied areas. EXCEPTION: Approved suspended unit heaters may be used, except in means of egress and sleeping areas, provided such heaters are located high enough to be out of the reach of persons using the area and provided they are equipped with the proper safety devices. Fireplaces may be used providing the fireplace is equipped with a heat tempered glass fireplace enclosure guaranteed against breakage up to a temperature of 650°F. If, in the opinion of the fire marshal, special hazards are present, a lock on the enclosure and other safety precautions may be required.

*b.* *"Combustion air."* If solid partitions are used to provide the separation of the furnace room from other areas, provision for outside air shall be made to assure adequate combustion for the heating unit.

**5.502(9)** *"Floor coverings."* For carpet see Table No. 5-D following 5.105(100). Wall hangings and window treatments shall be flame-retardant or rendered flame-retardant.

**5.502(10)** *"Maintenance."*

*a.* *"Regular and proper maintenance."* Regular and proper maintenance of electric service, heating plants, alarm systems, sprinkler systems, fire doors and exit facilities shall be accomplished.

*b.* *"Storerooms."* Storerooms shall be maintained in a neat and proper manner at all times.

*c.* *"Excessive storage."* Excessive storage of combustible materials such as paper cartons, magazines, paints, sprays, old clothing, furniture and similar materials shall be prohibited at all times.

**661—5.503** to **5.509** Reserved.

[Filed July 12, 1972]
[Filed 11/15/76, Notice 7/26/76—published 12/1/76, effective 1/5/77]
[Filed 4/1/88, Notice 9/23/87—published 4/20/88, effective 5/25/88]
[Filed 2/2/89, Notice 12/28/88—published 2/22/89, effective 3/29/89]
[Filed 4/24/92, Notice 2/19/92—published 5/13/92, effective 7/1/92]
[Filed 2/24/93, Notice 12/9/92—published 3/17/93, effective 5/1/93]
[Filed emergency 1/27/06—published 2/15/06, effective 2/1/06]
[Filed emergency 6/27/06—published 7/19/06, effective 7/1/06]

ADULT DAY SERVICES PROGRAMS

**661—5.510(231D) Adult day services.**

**5.510(1)** *Definitions.* The following definitions apply to rule 661—5.510(231D).

*"Existing adult day services program"* means an adult day services program certified or seeking certification from the department of inspections and appeals pursuant to the provisions of Iowa Code Supplement chapter 231D and which has been in continuous operation in the same facility since May 31, 2004, or before and which has operated continuously since May 31, 2004, in a facility which has not undergone major renovation or remodeling since May 31, 2004.

*"New adult day services program"* means an adult day services program certified or seeking certification from the department of inspections and appeals pursuant to the provisions of Iowa Code Supplement chapter 231D which has not been in continuous operation since May 31, 2004, or which operates in a facility which has undergone major renovation or remodeling since June 1, 2004.

*"NFPA"* means the National Fire Protection Association, Batterymarch Park, Quincy, MA 02269. References to the form "NFPA xx," where "xx" is a number, refer to the NFPA standard or pamphlet of the corresponding number.

**5.510(2)** *Fire safety requirements for existing adult day services programs.* NFPA 101, Life Safety Code, 2003 edition, Chapter 17, "Existing Day Care Occupancies," is adopted by reference as the rules establishing fire safety requirements for existing adult day services programs. Any existing adult day services program shall comply with the provisions of NFPA 101, Life Safety Code, 2003 edition, Chapter 17, "Existing Day Care Occupancies," by June 1, 2005.

EXCEPTION: If the fire marshal finds that a violation of any provision of NFPA 101, Life Safety Code, 2003 edition, Chapter 17, "Existing Day Care Occupancies," presents an imminent threat to the safety of clients or staff, the fire marshal may require correction of the condition or conditions which are in violation as a condition of approval of the facility for use by an adult day services program.

**5.510(3)** *Fire safety requirements for new adult day services programs.* NFPA 101, Life Safety Code, 2003 edition, Chapter 16, "New Day Care Occupancies," is adopted by reference as the rules establishing fire safety requirements for new adult day services programs.

This rule is intended to implement Iowa Code Supplement section 231D.15.

**661—5.511** to **5.606** Reserved.

[Filed 3/25/04, Notice 12/10/03—published 4/14/04, effective 6/1/04]

RESIDENTIAL FACILITIES

**661—5.607(100) Scope.** Rescinded IAB 11/22/06, effective 1/1/07.

**661—5.608(100) Means of escape.** Rescinded IAB 11/22/06, effective 1/1/07.

**661—5.609(100) Protection of vertical openings.** Rescinded IAB 11/22/06, effective 1/1/07.

**661—5.610(100) Detection, alarm, and communications.** Rescinded IAB 11/22/06, effective 1/1/07.

**661—5.611(100) Hazardous areas.** Rescinded IAB 11/22/06, effective 1/1/07.

**661—5.612(100) Building service.** Rescinded IAB 11/22/06, effective 1/1/07.

**661—5.613(100) Evacuation plan and fire drills.** Rescinded IAB 11/22/06, effective 1/1/07.

Rules 5.607(100) to 5.613(100) are intended to implement Iowa Code section 135G.4.

**661—5.614** Reserved.

**661—5.615(237C) Facilities in which foster care is provided to fewer than six children by agencies.** Any facility, including a single-family residence, within which foster care is provided by an agency to fewer than six children shall meet each of the requirements established in this rule.

**5.615(1)** Battery-operated smoke detectors shall be installed in each sleeping room and on each floor of the home and shall be installed in compliance with the manufacturer's instructions.

**5.615(2)** Each exit and exit path shall remain clear and unobstructed at all times.

**5.615(3)** A five-pound 2A:10B:C fire extinguisher shall be installed in the primary caregiver's sleeping room. Additional extinguishers may be provided. Each extinguisher in the facility shall be inspected yearly by a third party in accordance with NFPA 10, Standard for Portable Fire Extinguishers, 2006 edition.

**5.615(4)** No combustible items shall be stored within a three-foot clearance of furnaces, hot water heaters, and electrical panels.

**5.615(5)** A carbon monoxide detector shall be installed on each floor of the residence. A detector shall be installed in proximity to any gas-fired appliance. All detectors shall be installed in accordance with the manufacturer's installation instructions.

**5.615(6)** If propane is used in the facility, a propane leak detector shall be installed in proximity to each propane-fired appliance. All detectors shall be installed in accordance with the manufacturer's installation instructions.

**5.615(7)** An evacuation plan shall be maintained, and fire drills shall be conducted at least once every other month.

**5.615(8)** If a child is sleeping in a basement room, then an egress window shall be provided in the room. An "egress window" means an existing operable window with a clear opening area of not less than 5.7 square feet, and with a minimum opening height and width of 24 inches and 20 inches, respectively.

This rule is intended to implement Iowa Code section 237.3, subsection 3.

**661—5.616** to **5.619** Reserved.

**661—5.620(100,135C) General requirements for small group homes (specialized licensed facilities) licensed pursuant to Iowa Code section 135C.2.**

**5.620(1)** *Scope.* This rule applies to specialized licensed facilities licensed under the provisions of Iowa Code section 135C.2 having three to five beds and serving persons with mental retardation, chronic mental illness, developmental disabilities, or brain injuries.

**5.620(2)** *Exits.*

*a.* There shall be a minimum of two approved exits from the main level of the home and from each level with resident sleeping rooms.

*b.* Interior and exterior stairways shall have a minimum clear width of not less than 30 inches.

**5.620(3)** *Windows.* Every resident sleeping room shall have an outside window or outside door arranged and located to permit the venting of products of combustion and access to fresh air in the event of an emergency.

*a.* In new construction, windows shall have a minimum net clear openable area of 5.7 square feet, minimum net clear openable height of 24 inches, minimum net clear openable width of 20 inches and the finished sill height shall be not more than 44 inches above the floor.

*b.* In existing construction the finished sill height shall be not more than 44 inches above the floor or may be accessible from a platform not more than 44 inches below the window sill.

**5.620(4)** *Interior finish.* Interior finish in exit shall be Class A, B or C. See Table No. 5-C, following 661—5.105(100).

**5.620(5)** *Doors.* Doors to resident sleeping rooms shall be a minimum of 1 3/8-inch solid core wood or equivalent.

**5.620(6)** *Vertical separations.* Basement stairs must be enclosed with one-hour rated partitions and 1¾-inch solid core wood doors equipped with self-closers. These doors must be kept closed unless held open by an approved electromagnetic holder, actuated by an approved smoke detection device located at the top of the stairwell and interconnected with the alarm system.

**5.620(7)** *Fire detection, fire alarms and sprinklers.*

*a.* The home shall have smoke detection installed on each occupied floor, including basements, in accordance with NFPA 72, 1999 edition, Chapter 11. Smoke detectors shall be interconnected so that activation of any detector will sound an audible alarm throughout. The system shall be tested by a competent person at least semiannually with date of test and name noted.

*b.* Homes in which exiting is restricted by special door locking arrangements that prevent residents from free egress shall be equipped with sprinkler systems meeting the requirements of National Fire Protection Association Standard Number 13D, 1996 edition.

EXCEPTION: Homes in this classification that were licensed prior to November 1, 1999, shall comply with this requirement within a reasonable period of time and, in any event, not later than November 1, 2001.

**5.620(8)** *Fire extinguishers.*

*a.* Approved fire extinguishers shall be provided on each floor, so located that a person will not have to travel more than 75 feet from any point to reach the nearest extinguisher. An additional extinguisher shall be provided in, or adjacent to, each kitchen or basement storage room.

*b.* Type and number of portable fire extinguishers shall be determined by the fire marshal.

**5.620(9)** *Mechanical, electrical and building service equipment.*

*a.* Air conditioning, ventilating, heating, cooking and other service equipment shall be in accordance with state regulations governing same, or nationally recognized standards such as National Fire Protection Association standards governing the type of equipment, and shall be installed in accordance with the manufacturer's specifications. All hazardous areas normally found in one- and two-family dwellings, such as laundry, kitchen, heating units and closets need not be separated with walls if all equipment is installed in accordance with the manufacturer's listed instructions.

*b.* Portable comfort heating devices are prohibited.

**5.620(10)** *Attendants, evacuation plan.*

*a.* Every home shall have at least one staff person on the premises at all times while residents are present. This staff person shall be at least 18 years of age and capable of performing the required duties of evacuation. No person other than the management or a person under management control shall be considered as an attendant.

*b.* Every facility shall formulate a plan for the protection of all persons in the event of fire and for their evacuation to areas of refuge and from the building when necessary. All employees shall be instructed and kept informed respecting their duties under the plan. This plan is to be posted where all employees may readily study it. Fire drills shall be held at least once a month. Records must be kept available for inspection.

**5.620(11)** *Smoking.*

*a.* There shall be no smoking in resident sleeping areas and smoking and no smoking policies shall be strictly adhered to.

*b.* Ashtrays shall be constructed of noncombustible material with self-closing tops and shall be provided in all areas where smoking is permitted.

**5.620(12)** *Exit illumination.* Approved rechargeable battery-powered emergency lighting shall be installed to provide automatic exit illumination in the event of failure of the normal lighting system.

**5.620(13)** *Occupancy restrictions.*

*a.* Occupancies not under the control of, or not necessary to, the administration of residential care facilities are prohibited therein with the exception of the residence of the owner or manager.

*b.* Nonambulatory residents shall be housed only on accessible floors which have direct access to grade which does not involve stairs or elevators.

**5.620(14)** *Maintenance.*

*a.* All fire and life safety equipment or devices shall be regularly and properly maintained in an operable condition at all times in accordance with nationally recognized standards. This includes fire extinguishing equipment, alarm systems, doors and their appurtenances, cords and switches, heating and ventilating equipment, sprinkler systems and exit facilities.

*b.* Storerooms shall be maintained in a neat and proper manner at all times.

*c.* Excessive storage of combustible materials such as papers, cartons, magazines, paints, sprays, old clothing, furniture and similar materials shall be prohibited at all times.

This rule is intended to implement Iowa Code section 135C.2(5)*"b."*

**661—5.621** to **5.624** Reserved.

**661—5.625(100,231B) Elder group homes.** This rule applies to elder group homes certified by the Iowa department of elder affairs.

**5.625(1)** *Definitions.* The following definitions apply to rule 661—5.625(100,231B):

*"Elder"* means a person 60 years of age or older.

*"Elder group home"* means a single family residence that is the residence of a person who is providing room, board, and personal care to three to five elders who are not related to the person providing the service within the third degree of consanguinity or affinity and which is certified as an elder group home by the Iowa department of elder affairs.

**5.625(2)** *Exits.* There shall be a minimum of two approved exits from the main level of the home and from each level with resident sleeping rooms. Interior and exterior exit stairways shall have a minimum clear width of not less than 30 inches.

**5.625(3)** *Windows.* Each resident sleeping room shall have an outside window or outside door arranged and located to provide ventilation, access to fresh air, and an emergency escape route. New or replacement windows shall have a minimum net clear openable area of 5.7 square feet, minimum net clear openable height of 24 inches, minimum net clear openable width of 20 inches, and the finished sill height shall not be more than 44 inches above the floor.

**5.625(4)** *Interior finish.* Interior finish in resident occupied areas shall be Class A or B in accordance with Table 5-C, 661 IAC 5.105(100).

**5.625(5)** *Doors.* Door to resident sleeping rooms shall be a minimum of one and three-eighths inches solid core wood or equivalent.

**5.625(6)** *Fire detection.* An elder group home shall have smoke detectors installed on each floor, including the basement, and in each sleeping room, in accordance with National Fire Protection Association # 74, Standard for Household Fire Warning Equipment, 1989 edition, and 661 IAC 5.807(100). Smoke detectors shall be interconnected so that activation of any detector will activate detectors throughout the home.

**5.625(7)** *Fire extinguishers.* Fire extinguishers shall be provided on each floor and shall be located so that a person will not have to travel any more than 75 feet from any point in the home to reach the nearest extinguisher. An additional extinguisher shall be provided in, or adjacent to, the kitchen. Type, distribution, inspection, maintenance, and recharging of extinguishers shall conform to NFPA 10, Standard for Portable Fire Extinguishers, 2006 edition.

**5.625(8)** *Smoking.* There shall be no smoking in resident sleeping rooms. Smoking may be permitted in designated areas only. If an indoor area within an elder group home is designated as a smoking area, that area shall be equipped with ashtrays constructed of noncombustible material and with self-closing tops.

**5.625(9)** *Exit illumination.* Approved rechargeable battery-powered emergency lighting shall be installed to provide automatic exit illumination in the event of failure of the normal lighting system.

**5.625(10)** *Maintenance.* All fire and life safety equipment or devices shall be U.L. or independent testing laboratory approved, installed according to manufacturer specifications, and regularly and properly maintained at all times in accordance with nationally recognized standards. This includes, but is not limited to, fire extinguishing equipment, alarm systems, doors and their appurtenances, and exit facilities. Flammable and combustible materials shall be properly stored in original, properly labeled containers or approved safety containers. Storerooms shall be maintained in a neat and proper manner at all times. Excessive storage of combustible materials is not permitted.

**5.625(11)** *Equipment.* Electrical, heating, and ventilating equipment shall be installed and maintained in accordance with manufacturer's instructions and nationally recognized standards. Portable space heaters are not permitted.

**5.625(12)** *Emergency procedures.* Every home shall formulate a plan for the protection of occupants in the event of a fire or other emergency. The plan shall take into consideration areas of refuge within the building as well as evacuation from it. The written plan must be provided to each resident and explained to them at the time they move into the facility and at least annually thereafter.

**5.625(13)** *Compressed gases.* If oxygen or other compressed gases are required by residents for respiratory purposes, the applicable standards for use, containers, equipment, maintenance and storage of compressed gases, as set forth in National Fire Protection Association # 99, 1993 edition, shall be adhered to.

**5.625(14)** *Basements.* Interior basement stairways, if enclosed, must have walls and ceilings constructed of five-eighths inch gypsum board or material providing equivalent fire protection. Basements must be separated from the first floor by a self-closing one and three-eighths inch solid wood core door or equivalent. If a basement is used by residents, it must have a door leading to the outside or an operational window having a minimum net clear openable area of 5.7 square feet, minimum net clear openable height of 24 inches, minimum net clear openable width of 20 inches, and the finished sill height shall not be more than 44 inches above the floor.

**5.625(15)** *Construction.* Unprotected wood frame structures of more than two stories in height, excluding basement, shall not be permitted for use as elder group homes.

EXCEPTION: Unprotected wood frame structures protected throughout by an approved automatic sprinkler system may be used as elder group homes.

This rule is intended to implement Iowa Code chapter 100 and section 231B.2.

**661—5.626(231C) Assisted living housing.**

**5.626(1)** *Definitions.* The following definitions apply to rule 661—5.626(231C):

*"Assisted living facility"* means a facility that houses a program that is certified or seeking certification pursuant to the provisions of Iowa Code Supplement section 231C.3 or that has been identified by the department of inspections and appeals as a facility housing a program which requires certification pursuant to Iowa Code Supplement section 231C.3 and is not currently certified.

*"Existing assisted living facility"* means an assisted living facility which has been in continual operation since May 31, 2004, or before.

*"New assisted living facility"* means an assisted living facility which begins operation on or after June 1, 2004.

*"NFPA"* means the National Fire Protection Association, Batterymarch Park, Quincy, MA 02269. References to the form "NFPA xx," where "xx" is a number, refer to the NFPA standard or pamphlet of the corresponding number.

**5.626(2)** *New assisted living facilities.* NFPA 101, Life Safety Code, 2003 edition, Chapter 32, "New Residential Board and Care Occupancies," is hereby adopted by reference as the rules governing new assisted living facilities.

**5.626(3)** *Existing assisted living facilities.* NFPA 101, Life Safety Code, 2003 edition, Chapter 33, "Existing Residential Board and Care Occupancies," is hereby adopted by reference as the rules governing existing assisted living facilities.

**5.626(4)** *Alternative requirements.* In lieu of complying with the requirements established in subrule 5.626(2) or 5.626(3), an assisted living facility may alternatively comply with the requirements established in this subrule, if it meets the respective qualifications stated for the alternative requirement.

*a.* An assisted living facility that was initially approved by the fire marshal on the basis of compliance with the requirements of the 2000 edition of the Life Safety Code or that is located within or adjacent to a licensed health care facility required to comply with applicable provisions of the 2000 edition of the Life Safety Code may comply with the requirements established in NFPA 101, Life Safety Code, 2000 edition. If the facility was initially approved on the basis of compliance with Chapter 32, "New Residential Board and Care Occupancies," the facility shall continue to comply with the provisions of that chapter. A facility that was initially approved by the fire marshal on the basis of compliance with Chapter 33, "Existing Residential Board and Care Occupancies," may continue to comply with that chapter as long as it is in continuous operation and does not undergo major renovation

or remodeling. A facility that was initially approved on the basis of compliance with Chapter 33 and whose operation is not continuous or that undergoes major renovation or remodeling shall comply with Chapter 32.

*b.* An assisted living facility that was certified prior to July 1, 1997, and that has continuously operated under that certification since July 1, 1997, may comply with the requirements of NFPA 101, Life Safety Code, 1994 edition, Chapter 23, "Existing Residential Board and Care Occupancies."

*c.* An assisted living facility that was certified on or after July 1, 1997, and before June 1, 2004, and that has continuously operated under that certification since before June 1, 2004, may comply with the requirements of NFPA 101, Life Safety Code, 1994 edition, Chapter 22, "New Residential Board and Care Occupancies."

**5.626(5)** *Evacuation capability.* For any provision of subrules 5.626(1) through 5.626(4) which is contingent upon evacuation capability, facilities may:

*a.* Comply with requirements for an evacuation capability rating of "impractical."

*b.* Comply with requirements which are contingent upon evacuation ratings of "slow" or "prompt," provided that the residents and staff of the facility have undergone evacuation rating evaluations performed by a health care professional and that all residents and staff are rated capable of "slow" or "prompt" evacuation, respectively. The evacuation capability ratings shall be updated each time a new resident arrives at the facility, a new staff person is assigned to the facility, or the physical condition or capacity for mobility of a resident or staff member changes significantly. Evacuation capability ratings shall be performed at the expense of the facility and any records supporting the ratings shall be made available to a fire inspector or personnel of the department of inspections and appeals upon request.

This rule is intended to implement Iowa Code Supplement section 231C.4.

**661—5.627** to **5.649** Reserved.

[Filed 6/26/87, Notice 12/31/86—published 7/15/87, effective 8/19/87]
[Filed 4/1/88, Notice 9/23/87—published 4/20/88, effective 5/25/88]
[Filed 2/2/89, Notice 12/28/88—published 2/22/89, effective 3/29/89]
[Filed 11/26/90, Notice 8/22/90—published 12/12/90, effective 1/16/91]
[Filed 3/11/94, Notice 1/5/94—published 3/30/94, effective 6/1/94]
[Filed 5/16/97, Notice 3/26/97—published 6/4/97, effective 7/15/97]
[Filed 12/16/98, Notice 6/3/98—published 1/13/99, effective 3/1/99][2]
[Filed 9/30/99, Notice 4/21/99—published 10/20/99, effective 12/1/99]
[Filed 1/26/01, Notice 10/4/00—published 2/21/01, effective 4/1/01]
[Filed emergency 3/10/03—published 4/2/03, effective 3/11/03]
[Filed 10/7/03, Notice 5/28/03—published 10/29/03, effective 1/1/04]
[Filed 3/25/04, Notice 12/10/03—published 4/14/04, effective 6/1/04]
[Filed 12/14/04, Notice 9/29/04—published 1/5/05, effective 3/1/05]
[Filed emergency 1/27/06—published 2/15/06, effective 2/1/06]
[Filed emergency 6/27/06—published 7/19/06, effective 7/1/06]
[Filed 11/2/06, Notice 9/13/06—published 11/22/06, effective 1/1/07]

FIRE SAFETY RULES FOR SCHOOL AND COLLEGE BUILDINGS

**661—5.650(100) General requirements and definitions.** Rescinded IAB 11/22/06, effective 1/1/07.

EXISTING SCHOOL BUILDINGS

**661—5.651(100) Application.** Rescinded IAB 11/22/06, effective 1/1/07.

**661—5.652(100) Exits and occupancy load.** Rescinded IAB 11/22/06, effective 1/1/07.

**661—5.653(100) Corridors.** Rescinded IAB 11/22/06, effective 1/1/07.

**661—5.654(100) Doors.** Rescinded IAB 11/22/06, effective 1/1/07.

**661—5.655(100) Windows.** Rescinded IAB 11/22/06, effective 1/1/07.

**661—5.656(100) Stairway enclosures and floor cutoffs.** Rescinded IAB 11/22/06, effective 1/1/07.

**661—5.657(100) Interior finishes.** Rescinded IAB 11/22/06, effective 1/1/07.

**661—5.658(100) Construction.** Rescinded IAB 11/22/06, effective 1/1/07.

**661—5.659(100) Fire alarm systems.** Rescinded IAB 11/22/06, effective 1/1/07.

**661—5.660(100) Electrical wiring.** Rescinded IAB 11/22/06, effective 1/1/07.

**661—5.661(100) Heating equipment and flammable and combustible liquids.** Rescinded IAB 11/22/06, effective 1/1/07.

**661—5.662(100) Gas piping.** Rescinded IAB 12/1/99, effective 2/1/00.

**661—5.663(100) Fire extinguishers.** Rescinded IAB 11/22/06, effective 1/1/07.

**661—5.664(100) Basement, underground and windowless classrooms.** Rescinded IAB 11/22/06, effective 1/1/07.

**661—5.665(100) Fire hazard safeguards.** Rescinded IAB 11/22/06, effective 1/1/07.

**661—5.666(100) Automatic sprinklers.** Rescinded IAB 11/22/06, effective 1/1/07.

**661—5.667(100) Open plan buildings.** Rescinded IAB 11/22/06, effective 1/1/07.

[Filed 12/19/60]
[Filed 6/22/62; amended 4/6/65, 10/17/69]
[Filed emergency 9/6/85—published 9/25/85, effective 9/6/85]
[Filed 4/1/88, Notice 9/23/87—published 4/20/88, effective 5/25/88]
[Filed 3/16/90, Notice 12/13/89—published 4/4/90, effective 5/9/90]
[Filed 8/25/92, Notice 5/13/92—published 9/16/92, effective 11/1/92]
[Filed 11/9/99, Notice 4/21/99—published 12/1/99, effective 2/1/00]
[Filed emergency 1/27/06—published 2/15/06, effective 2/1/06]
[Filed 11/2/06, Notice 9/13/06—published 11/22/06, effective 1/1/07]

**661—5.668** to **5.674** Reserved.

NEW SCHOOL BUILDINGS

**661—5.675(100) New school buildings.** Rescinded IAB 11/22/06, effective 1/1/07.

[Filed 11/9/99, Notice 4/21/99—published 12/1/99, effective 2/1/00]
[Filed emergency 1/27/06—published 2/15/06, effective 2/1/06]
[Filed 11/2/06, Notice 9/13/06—published 11/22/06, effective 1/1/07]

**661—5.676** to **5.699** Reserved.

NEW COLLEGE BUILDINGS

**661—5.700** to **5.714** Rescinded IAB 12/1/99, effective 2/1/00. See 661—5.775(100).

[Filed April 6, 1965; amended October 17, 1969]
[Filed 4/1/88, Notice 9/23/87—published 4/20/88, effective 5/25/88]

[Filed 11/9/99, Notice 4/21/99—published 12/1/99, effective 2/1/00]

**661—5.715** to **5.748** Reserved.

EXISTING COLLEGE BUILDINGS

**661—5.749(100) Application.** Rescinded IAB 11/22/06, effective 1/1/07.

**661—5.750(100) Exits.** Rescinded IAB 11/22/06, effective 1/1/07.

**661—5.751(100) Corridors.** Rescinded IAB 11/22/06, effective 1/1/07.

**661—5.752(100) Doors.** Rescinded IAB 11/22/06, effective 1/1/07.

**661—5.753(100) Windows.** Rescinded IAB 11/22/06, effective 1/1/07.

**661—5.754(100) Stairway enclosures and floor cutoffs.** Rescinded IAB 11/22/06, effective 1/1/07.

**661—5.755(100) Interior finishes.** Rescinded IAB 11/22/06, effective 1/1/07.

**661—5.756(100) Construction.** Rescinded IAB 11/22/06, effective 1/1/07.

**661—5.757(100) Fire alarm systems.** Rescinded IAB 11/22/06, effective 1/1/07.

**661—5.758(100) Electrical wiring.** Rescinded IAB 11/22/06, effective 1/1/07.

**661—5.759(100) Heating equipment and flammable and combustible liquids.** Rescinded IAB 11/22/06, effective 1/1/07.

**661—5.760(100) Gas piping.** Rescinded IAB 2/15/06, effective 2/1/06.

**661—5.761(100) Fire extinguishers.** Rescinded IAB 11/22/06, effective 1/1/07.

**661—5.762(100) Basements.** Rescinded IAB 11/22/06, effective 1/1/07.

**661—5.763(100) Fire hazard safeguards.** Rescinded IAB 11/22/06, effective 1/1/07.

**661—5.764(100) Automatic sprinklers.** Rescinded IAB 11/22/06, effective 1/1/07.

**661—5.765(100) Open plan buildings.** Rescinded IAB 11/22/06, effective 1/1/07.

[Filed 12/19/60; amended 6/22/62]
[Filed 4/6/65; amended 10/17/79]
[Filed 4/1/88, Notice 9/23/87—published 4/20/88, effective 5/25/88]
[Filed 11/9/99, Notice 4/21/99—published 12/1/99, effective 2/1/00]
[Filed emergency 1/27/06—published 2/15/06, effective 2/1/06]
[Filed 11/2/06, Notice 9/13/06—published 11/22/06, effective 1/1/07]

**661—5.766** to **5.774** Reserved.

NEW COLLEGE BUILDINGS

**661—5.775(100) New college buildings.** Rescinded IAB 11/22/06, effective 1/1/07.

[Filed April 6, 1965; amended October 17, 1969]
[Filed 4/1/88, Notice 9/23/87—published 4/20/88, effective 5/25/88]
[Filed 11/9/99, Notice 4/21/99—published 12/1/99, effective 2/1/00]

[Filed 11/2/06, Notice 9/13/06—published 11/22/06, effective 1/1/07]

**661—5.776** to **5.799** Reserved.

FIRE SAFETY RULES FOR RESIDENTIAL OCCUPANCIES

**661—5.800(100) General provisions.** Rescinded IAB 11/22/06, effective 1/1/07.

NEW RESIDENTIAL OCCUPANCIES

**661—5.801(100) General requirements.** Rescinded IAB 11/22/06, effective 1/1/07.

**661—5.802(100) Exit facilities in new residential occupancies.** Rescinded IAB 11/22/06, effective 1/1/07.

**661—5.803(100) General safety requirements.** Rescinded IAB 11/22/06, effective 1/1/07.

EXISTING RESIDENTIAL OCCUPANCIES

**661—5.804(100) Existing residential occupancies.** Rescinded IAB 11/22/06, effective 1/1/07.

**661—5.805(100) Exit facilities.** Rescinded IAB 11/22/06, effective 1/1/07.

**661—5.806(100) General provisions.** Rescinded IAB 11/22/06, effective 1/1/07.

**661—5.807(100) Smoke detectors definition.** "Approved" is defined as being acceptable to the state fire marshal. Any equipment, device or procedure which bears the stamp of approval or meets applicable standards prescribed by an organization of national reputation such as the Underwriters Laboratories, Inc., National Bureau of Standards, Factory Mutual Laboratories, American Society for National Fire Protection Association, American Society of Mechanical Engineers or American Standards Association, which undertakes to test and approve or provide standards for equipment, devices or procedures of the nature prescribed in these regulations shall be deemed acceptable to the state fire marshal.

**661—5.808(100) General requirements.**

**5.808(1)** Approved single station smoke detectors will be acceptable in all areas covered by these regulations, unless other fire warning equipment or materials are required by other standards.

**5.808(2)** Any installation of wiring and equipment shall be in accordance with the latest edition of the National Fire Protection Association Standard No. 70, National Electric Code, and other applicable standards.

**5.808(3)** All devices, combinations of devices, and equipment to be installed in conformity with these regulations shall be approved and used for the purposes for which they are intended.

**5.808(4)** A combination system, such as a household fire warning system whose components may be used in whole or in part, in common with a nonfire emergency signaling system, such as a burglar alarm system or an intercom system, shall not be permitted or approved, except for one- or two-family dwellings.

**5.808(5)** All power supplies shall be sufficient to operate the alarm for at least four continuous minutes.

**5.808(6)** Power source.

*a.* In new buildings and additions constructed after July 1, 1991, required smoke detectors shall receive their primary power from the building wiring when such wiring is served from a commercial source. Wiring shall be permanent and without a disconnecting switch other than those required for overcurrent protection. Smoke detectors may be solely battery operated when installed in existing buildings, or in buildings without commercial power, or in buildings which undergo alterations, repairs or additions regulated by subrule 5.808(2).

*b.* New and replacement smoke detectors installed after May 1, 1993, which receive their primary power from the building wiring shall be equipped with a battery backup.

**5.808(7)** The failure of any nonreliable or short-life component which renders the detector inoperative shall be readily apparent to the occupant of the sleeping unit without the need for a test. Each smoke detector shall detect abnormal quantities of smoke that may occur and shall properly operate in the normal environmental condition.

**5.808(8)** Equipment shall be installed, located and spaced in accordance with the manufacturer's recommendations.

**5.808(9)** Installed fire warning equipment shall be mounted so as to be supported independently of its attachment to wires.

**5.808(10)** All apparatus shall be restored to normal immediately after each alarm or test.

**5.808(11)** Location within dwelling units.

*a.* In dwelling units, detectors shall be mounted on the ceiling or wall at a point centrally located in the corridor or area giving access to each separate sleeping area. When the dwelling unit has more than one story and in dwellings with basements, a detector shall be installed on each story and in the basement. In dwelling units where a story or basement is split into two or more levels, the smoke detector shall be installed on the upper level, except that when the lower level contains a sleeping area, a detector shall be installed on each level. When sleeping rooms are on an upper level, the detector shall be placed at the ceiling of the upper level in close proximity to the stairway. In dwelling units where the ceiling height of a room open to the hallway serving the bedrooms exceeds that of the hallway by 24 inches or more, smoke detectors shall be installed in the hallway and in the adjacent room. Detectors shall sound an alarm audible in all sleeping areas of the dwelling unit in which they are located.

*b.* Location in efficiency dwelling units and hotels. In efficiency dwelling units, hotel suites and in hotel sleeping rooms, detectors shall be located on the ceiling or wall of the main room or hotel sleeping room. When sleeping rooms within an efficiency dwelling unit or hotel suite are on an upper level, the detector shall be placed at the ceiling of the upper level in close proximity to the stairway. When actuated, the detector shall sound an alarm audible within the sleeping area of the dwelling unit, hotel suite or sleeping room in which it is located.

**661—5.809(100) Smoke detectors—notice and certification of installation.**

**5.809(1)** *Notice of installation.* Owners of rental residential buildings containing two or more units required by law to install smoke detectors shall notify their local fire department upon installation of required smoke detectors.

**5.809(2)** *Certification—single-family dwelling units.* A person who files for homestead credit pursuant to Iowa Code chapter 425 shall certify that the single-family dwelling unit for which credit is filed has a smoke detector(s) installed in accordance with 5.808(6) and 5.808(11)*"a,"* or that such smoke detector(s) will be installed within 30 days of the date of filing for credit.

**5.809(3)** *Reports to fire marshal.* Each county or city assessor charged with the responsibility of accepting homestead exemption credit applications will obtain certification of smoke detection on a form acceptable to the state fire marshal, signed by the person making application for credit and file a quarterly report with the fire marshal listing the name, address and whether applicant attested to a detector(s) being present at the time of application or that a detector(s) would be installed as required within 30 days.

**661—5.810(100) Smoke detectors—new and existing construction.**

**5.810(1)** *New construction.* All multiple-unit residential buildings and single-family dwellings which are constructed after July 1, 1991, shall include the installation of smoke detectors meeting the requirements of rule 661—5.807(100) and rule 661—5.808(100).

**5.810(2)** *Existing construction.* All existing single-family units and multiple-unit residential buildings shall be equipped with smoke detectors as required in 5.808(11)*"a."*

Rules 5.807(100) to 5.810(100) are intended to implement Iowa Code section 100.18.

OCCUPANCY CLASSIFICATIONS PER TABLE 8-A

| General Occupation Description | Current Occupancy Designation | Complete Occupancy Description |
|---|---|---|
| Assembly | A-1 | Any assembly building with a stage and occupant load of 1,000 or more in building. |
| | A-2 | Any building or portion of a building having an assembly room with an occupant load of less than 1,000 and a stage. |
| | A-2.1 | Any building or portion of a building having an assembly room with an occupant load of 300 or more without a stage, including such buildings used for educational purposes and not classed as a Group E or Group B, Division 2 Occupancy. |
| | A-3 | Any building or portion of building having an assembly room with an occupant load of 300 or more without a stage, including such buildings used for educational purposes and not classed as a Group E or Group B, Division 2 Occupancy. |
| | A-4 | Stadiums, reviewing stands and amusement park structures not included within other Group A Occupancies. |
| Business, including offices, factories, mercantile and storage | B-1 | Gasoline service stations, storage garages where no repair work is done except exchange of parts and maintenance requiring no open flame, welding or the use of highly flammable liquids. |
| | B-2 | Drinking and dining establishments having an occupant load of less than 50, wholesale and retail stores, office buildings, printing plants, municipal police and fire stations, factories and workshops using material not highly flammable or combustible, storage and sales rooms for combustible goods, paint stores without bulk handling.<br><br>Buildings or portions of buildings having rooms used for educational purposes, beyond the 12th grade, with less than 50 occupants in any room. |
| | B-3 | Aircraft hangers where no repair work is done except change of parts and maintenance requiring no open flame, welding or use of highly flammable liquids. Open parking garages, heliports. |
| | B-4 | Ice plants, power plants, pumping plants, cold storage, creameries. Factories and workshops using noncombustible and nonexplosive materials. Storage and sales rooms for noncombustible and nonexplosive materials. |
| Educational | E-1 | Any building used for educational purposes through 12th grade by 50 or more persons for more than twelve hours per week or four hours in any one day. |
| | E-2 | Any building used for educational purposes through 12th grade by less than 50 persons for more than twelve hours per week or four hours in one day. |
| | E-3 | Any building used for day-care purposes for more than six children. |
| Hazardous | H-1 | Storage, handling, use or sale of hazardous and highly flammable or explosive materials other than Class I, II, or III-A liquids. |

| | | |
|---|---|---|
| | H-2 | Storage and handling of Class I, II and III-A liquids, dry cleaning plants using flammable liquids; paint stores with bulk handling; paint shops and spray painting rooms and shops. The storage or sale of hazardous materials or chemicals or Class I, II and III-A liquids in amounts that do not exceed those set forth in Table No. 9-A is permitted in buildings or portions thereof without classifying such buildings as a Group H Occupancy, provided such chemicals, hazardous materials or liquids are stored and handled in compliance with the provisions of the Fire Code. |
| | H-3 | Woodworking establishments, planing mills, box factories, buffing rooms for tire rebuilding plants and picking rooms; shops, factories or warehouses where loose combustible fibers or dust are manufactured, processed, generated or stored; and pin-refinishing rooms. |
| | H-4 | Repair garages. |
| | H-5 | Aircraft repair hangers. |
| Institutional | I-1 | Nurseries for full-time care of children under the age of six (each accommodating more than five persons). Hospitals, sanitariums, nursing homes with nonambulatory patients and similar buildings (each accommodating more than five persons). |
| | I-2 | Nursing homes for ambulatory patients, homes for children six years of age or over (each accommodating more than five persons). |
| | I-3 | Mental hospitals, mental sanitariums, jails, prisons, reformatories and buildings where personal liberties of inmates are similarly restrained. |
| | | EXCEPTION: Group I Occupancies shall not include buildings used only for private residential purposes for a family group. |
| Miscellaneous 11 structures | M-1 | Private garages, carports. |
| | M-2 | Fences over six feet high, tanks and towers. |
| Residential 12 | R-1 | Hotels and apartment houses. Convents and monasteries (more than 10 people). |
| | R-3 | Lodging houses (five guests or rooms). |

TABLE 8-B: ALLOWABLE FLOOR AREA
(Per single story)
AND MAXIMUM HEIGHT OF BUILDINGS

| TYPES OF CONSTRUCTION | | | | | | | | |
|---|---|---|---|---|---|---|---|---|
| I | II | | | III | | IV | V | |
| F.R. | F.R. | ONE-HOUR | N | ONE-HOUR | N | H.T. | ONE-HOUR | N |

BASIC ALLOWABLE FLOOR AREA FOR BUILDINGS ONE STORY IN HEIGHT
(In Square Feet)

| | | | | | | | | |
|---|---|---|---|---|---|---|---|---|
| Unlimited | 29,900 | 13,500 | 9,100 | 13,500 | 9,100 | 13,500 | 10,500 | 6,000 |
| MAXIMUM HEIGHT IN FEET | | | | | | | | |
| Unlimited | 160 | 65 | 55 | 65 | 55 | 65 | 50 | 40 |
| MAXIMUM HEIGHT IN STORIES | | | | | | | | |
| Unlimited | 12 | 4 | 2 | 4 | 2 | 4 | 3 | 2 |

See Notes 1. - 6.
N — No Requirements for Fire Resistance
F.R. — Fire Resistive
H.T. — Heavy Timber

NOTE 1: Separation on two sides. Where public space, streets, or yards more than twenty feet in width extend along and adjoin the sides of the building, floor areas may be increased at a rate of 1¼ percent for each foot by which the minimum width exceeds twenty feet but the increase shall not exceed 50 percent.

NOTE 2: Separation on three sides. Where public space, streets or yards more than twenty feet in width extend along and enjoin three sides of the building, floor areas may be increased at a rate of 2½ percent for each foot by which the minimum width exceeds twenty feet, but the increase shall not exceed 100 percent.

NOTE 3: Separation on all sides. Where public space, streets or yards more than twenty feet in width extend on all sides of a building and enjoin the entire perimeter, floor areas may be increased at a rate of 5 percent for each foot by which the minimum width exceeds twenty feet. Such increases shall not exceed 100 percent.

NOTE 4: Areas of buildings over one story. The total combined floor area for multistory buildings may be twice that permitted by Table 8-B for one-story buildings, and the floor area of any single story shall not exceed that permitted for a one-story building.

NOTE 5: Automatic sprinkler system. The areas specified in Table 8-B may be tripled in one-story buildings and doubled in buildings of more than one story if the building is provided with an approved automatic sprinkler system throughout. The area increases permitted for installing an approved automatic sprinkler system may be compounded with that specified in Notes 1, 2, and 3.

NOTE 6: The area increases permitted in Note 5 shall not apply when automatic sprinkler systems are installed under the following provisions:

a. An increase in allowable number of stories.
b. Substitution for one-hour fire-resistive construction.
c. Atriums.

TABLE 8-C—REQUIRED SEPARATION
IN BUILDINGS OF MIXED OCCUPANCY
(In Hours)

| | A-1 | A-2 | A-2.1 | A-3 | A-4 | B-1 | B-2 | B-3 | B-4 | E | H-1 | H-2 | H-3 | H-4,5 | I | M[2] | R-1 | R-3 |
|---|---|---|---|---|---|---|---|---|---|---|---|---|---|---|---|---|---|---|
| I | 3 | 3 | 3 | 3 | 3 | 4 | 2 | 4 | 4 | 1 | NP[3] | 4 | 4 | 4 | — | 1 | 1 | 1 |
| R-1 | 1 | 1 | 1 | 1 | 1 | 3[1] | 1 | 1 | 1 | 1 | 4 | 3 | 3 | 3 | 1 | 1 | — | N |
| R-3 | 1 | 1 | 1 | 1 | 1 | 1 | N | N | N | 1 | 4 | 3 | 3 | 3 | 1 | 1 | N | — |

[1]The three-hour separation may be reduced to one hour where the Group B, Division 1 Occupancy, is limited to the storage of passenger motor vehicles having a capacity of not more than nine persons per vehicle and provided no repair or fueling is done and the area does not exceed 3,000 square feet in a building.

[2]In the one-hour occupancy separation between a Group R, Division 3 and M Occupancy, the separation may be limited to the installation of materials approved for one-hour fire-resistive construction on the garage side and a self-closing, tight fitting solid wood door in lieu of a one-hour fire assembly. Fire dampers shall not be required in ducts piercing this separation for ducts constructed of not less than No. 26 gauge galvanized steel.

[3]Not permitted.

**661—5.811** to **5.819** Reserved.

[Filed June 22, 1962]
[Filed 2/12/82, Notice 12/9/81—published 3/3/82, effective 4/7/82]
[Filed 9/9/85, Notice 7/17/85—published 9/25/85, effective 10/30/85]
[Filed 4/1/88, Notice 9/23/87—published 4/20/88, effective 5/25/88]
[Filed 2/2/89, Notice 12/28/88—published 2/22/89, effective 3/29/89]
[Filed 11/22/91, Notice 7/10/91—published 12/11/91, effective 1/15/92]
[Filed 4/24/92, Notice 2/19/92—published 5/13/92, effective 7/1/92]
[Filed 2/24/93, Notice 12/9/92—published 3/17/93, effective 5/1/93]
[Filed 3/2/01, Notice 7/12/00—published 3/21/01, effective 5/1/01][3]
[Filed emergency 1/27/06—published 2/15/06, effective 2/1/06]
[Filed 11/2/06, Notice 9/13/06—published 11/22/06, effective 1/1/07]

BED AND BREAKFAST INNS

**661—5.820(100,137C) Bed and breakfast inns.**

**5.820(1)** *Appliances.* Heating, cooking and gas and electrical equipment and appliances must conform with nationally recognized codes and standards and be installed and maintained in accordance with manufacturer's recommendations. If the building has an operable solid fuel fireplace, all components must be cleaned and maintained in accordance with NFPA 211, 2000 edition.

**5.820(2)** *Smoke detectors.* Each bed and breakfast inn shall have an operable smoke detector in each guest room, at the top of each stairwell, and at intervals not to exceed 30 feet in each exit corridor. Detectors shall be installed and maintained in accordance with NFPA 72, 1999 edition.

*a. Existing facilities.* In bed and breakfast inns which begin operation or are constructed or remodeled prior to February 1, 2002, required smoke detectors may be battery operated.

*b. New facilities.* Each bed and breakfast inn which begins operation or is constructed or remodeled on or after February 1, 2002, shall be equipped with a system of interconnected smoke detectors with detectors at the top of each stairwell and at intervals not to exceed 30 feet in each exit

corridor. These smoke detectors shall receive primary power from the building's electrical wiring and shall include battery backup. Each guest room shall be equipped with a smoke detector which may be a single station detector that complies with subrule 5.807(6).

**5.820(3)** *Emergency lighting.* Each bed and breakfast inn must be equipped with approved emergency lighting so located and directed in a manner that will illuminate the routes of travel from each guest-occupied room to the outside of the building.

**5.820(4)** *Windows.* Each bed and breakfast inn guest sleeping room must have at least one outside window that is openable without the use of tools or special knowledge. The window must be large enough that, when open and without breaking glass, it will permit the emergency egress of guests.

**5.820(5)** *Exits.* Each story that has one or more guest sleeping rooms must have two means of exit that are remote from each other and so arranged and constructed as to minimize any possibility that both may be blocked by any one fire or other emergency.

**5.820(6)** *Exit door markings.* Exit doors must be marked in accordance with NFPA 101, Life Safety Code, 2000 edition, Section 7.10.

**5.820(7)** *Fire extinguishers.* Fire extinguishers must be installed and maintained in accordance with National Fire Protection Association Standard Number 10, 1998 edition.

**5.820(8)** *Smoking prohibited.* Smoking is not permitted in any sleeping room, and rooms shall be posted with plainly visible signs so stating.

**5.820(9)** *Additional prohibitions.* Candles, lamps with power sources other than electricity or solid fuel fireplaces shall not be used in guest sleeping rooms.

**5.820(10)** *Directions.* Each bed and breakfast inn shall have clearly displayed in each guest bedroom printed directions and a diagram for emergency evacuation procedures. These directions must include the primary route to the outside and how to use the emergency egress window in the event the primary route cannot be traversed.

This rule is intended to implement Iowa Code section 137C.35.

**661—5.821** to **5.849** Reserved.

[Filed 3/2/01, Notice 7/12/00—published 3/21/01, effective 5/1/01[3]
[Filed emergency 1/2/02—published 1/23/02, effective 2/1/02]
[Filed emergency 1/27/06—published 2/15/06, effective 2/1/06]

EXPLOSIVE MATERIALS

**661—5.850(101A) Rules generally.** Rescinded IAB 10/12/05, effective 1/1/06.

**661—5.851(101A) Inventory.** Inventory shall be of such that it shows amount of explosive material on hand, quantities dispensed and to whom, and quantity on hand at the end of each calendar working day. Anytime a shortage appears it shall be reported immediately to the chief of police or sheriff having jurisdiction, who in turn shall cause a federal form 4712 (Department of Treasury, Internal Revenue Service) to be implemented, a copy of which shall be sent to the Iowa Department of Public Safety, attention of state fire marshal.

This rule is intended to implement Iowa Code section 101A.5.

**661—5.852** to **5.864** Reserved.

**661—5.865(101A,252J) Grounds for suspension, revocation, or denial of commercial explosives licenses.** The department may refuse to issue a commercial license for the manufacture, importation, distribution, sale, and commercial use of explosives sought pursuant to Iowa Code section 101A.2 or may suspend or revoke such a license for any of the following reasons:

1. Finding that the applicant or licensee is not of good moral character and sound judgment.
2. Finding that the applicant or licensee lacks sufficient knowledge of the use, handling, and storage of explosive materials to protect the public safety.

3. Finding that the applicant or licensee falsified information in the current or any previous license application.

4. Proof that the licensee or applicant has violated any provision of Iowa Code chapter 101A or these rules.

5. Receipt by the department of a certificate of noncompliance from the child support recovery unit of the Iowa department of human services, pursuant to the procedures set forth in Iowa Code Supplement chapter 252J.

An applicant or licensee whose application is denied or a licensee whose license is suspended or revoked other than because of receipt of a certificate of noncompliance from the child support recovery unit may appeal that action pursuant to 661—Chapter 10. Applicants or licensees whose licenses are denied, suspended, or revoked because of receipt by the department of a certificate of noncompliance issued by the child support recovery unit shall be subject to the provisions of rule 661—5.866(252J) and procedures specified in 661—Chapter 10 for contesting department actions shall not apply in these cases.

This rule is intended to implement Iowa Code section 101A.2 and Iowa Code Supplement chapter 252J.

**661—5.866(252J) Child support collection procedures.** The following procedures shall apply to actions taken by the department on a certificate of noncompliance received from the Iowa department of human services pursuant to Iowa Code Supplement chapter 252J:

**5.866(1)** The notice required by Iowa Code Supplement section 252J.8 shall be served upon the applicant or licensee by restricted certified mail, return receipt requested, or personal service in accordance with Rules of Civil Procedure 56.1. Alternatively, the licensee, identification card holder, or applicant may accept service personally or through authorized counsel.

**5.866(2)** The effective date of revocation or suspension of a license, or denial of the issuance or renewal of a license, as specified in the notice required by Iowa Code Supplement section 252J.8, shall be 60 days following service upon the licensee or applicant.

**5.866(3)** Licensees and applicants for licenses shall keep the department informed of all court actions and all child support recovery unit actions taken under or in connection with Iowa Code Supplement chapter 252J and shall provide the department with copies, within seven days of filing or issuance, of all applications filed with the district court pursuant to Iowa Code Supplement section 252J.9, all court orders entered in such actions, and withdrawals of certificates of noncompliance by the child support recovery unit.

**5.866(4)** All departmental fees for applications, license renewal or reinstatement must be paid by the licensee or applicant before a license will be issued, renewed, or reinstated after the department has denied the issuance or renewal of a license, or has suspended or revoked a license pursuant to Iowa Code Supplement chapter 252J.

**5.866(5)** In the event a licensee or applicant files a timely district court action following service of a department notice pursuant to Iowa Code Supplement sections 252J.8 and 252J.9, the department shall continue with the intended action described in the notice upon the receipt of a court order lifting the stay, dismissing the action, or otherwise directing the department to proceed. For the purpose of determining the effective date of revocation or suspension or denial of the issuance or renewal of a license, the department shall count the number of days before the action was filed and the number of days after the action was disposed of by the court.

This rule is intended to implement Iowa Code chapter 252J.

[Filed August 19, 1971]
[Filed 6/15/84, Notice 4/11/84—published 7/4/84, effective 8/8/84]
[Filed emergency 7/13/84—published 8/1/84, effective 8/8/84]
[Filed 4/1/88, Notice 9/23/87—published 4/20/88, effective 5/25/88]
[Filed 11/3/95, Notice 8/2/95—published 11/22/95, effective 1/1/96]
[Filed 7/25/96, Notice 6/19/96—published 8/14/96, effective 10/1/96]

[Filed emergency 2/25/05—published 3/16/05, effective 3/1/05]
[Filed 9/22/05, Notice 3/16/05—published 10/12/05, effective 1/1/06]

**661—5.867** to **5.899** Reserved.

HOSPITALS AND LICENSED HEALTH CARE FACILITIES
[Prior to 4/2/03, see rules 661—5.550(100) to 661—5.603(100)]

Rescinded IAB 6/22/05, effective 5/24/05. See 661—Ch 205.
[Filed 11/25/55]
[Filed 9/17/57; amended 10/9/57]
[Filed 8/21/57; amended 1/15/60, 6/22/62, 8/19/70]
[Filed 10/8/57; amended 1/15/60, 8/31/71, 11/24/71, 12/13/72]
[Filed 8/1/60]
[Filed 12/19/60]
[Filed 6/22/62]
[Filed 4/6/65; amended 10/17/69]
[Filed 8/19/71]
[Filed 7/12/72]
[Filed 10/12/71; amended 12/31/73]
[Filed 6/30/75]
[Filed 6/22/76, Notice 5/17/76—published 7/12/76, effective 8/16/76]
[Filed 11/15/76, Notice 7/26/76—published 12/1/76, effective 1/5/77]
[Filed 2/16/77, Notice 1/12/77—published 3/9/77, effective 4/13/77]
[Filed 3/3/77, Notice 1/26/77—published 3/23/77, effective 4/27/77]
[Filed 4/4/77, Notice 9/22/76—published 4/20/77, effective 5/25/77]
[Filed 6/22/77, Notice 5/4/77—published 7/13/77, effective 8/17/77]
[Filed 9/7/79, Notice 7/25/79—published 10/3/79, effective 11/8/79][4]
[Filed emergency after Notice 12/7/79, Notice 11/14/79—published 12/26/79, effective 1/17/80]
[Filed 2/12/82, Notice 12/9/81—published 3/3/82, effective 4/7/82]
[Filed 9/23/82, Notice 8/4/82—published 10/13/82, effective 11/17/82]
[Filed 11/5/82, Notice 9/29/82—published 11/24/82, effective 12/29/82]
[Filed emergency 12/17/82—published 1/5/83, effective 12/17/82]
[Filed 2/25/83, Notice 1/19/83—published 3/16/83, effective 4/20/83]
[Filed 4/7/83, Notice 3/2/83—published 4/27/83, effective 6/2/83]
[Filed 4/6/84, Notice 2/29/84—published 4/25/84, effective 5/31/84]
[Filed emergency 5/4/84—published 5/23/84, effective 5/31/84]
[Filed 6/15/84, Notice 4/11/84—published 7/4/84, effective 8/8/84]
[Filed emergency 7/13/84—published 8/1/84, effective 8/8/84]
[Filed 3/21/85, Notice 11/21/84—published 4/10/85, effective 5/15/85]
[Filed 5/17/85, Notice 12/19/84—published 6/5/85, effective 7/10/85]
[Filed emergency 9/6/85—published 9/25/85, effective 9/6/85]
[Filed 9/9/85, Notice 7/17/85—published 9/25/85, effective 10/20/85]
[Filed 6/13/86, Notice 4/9/86—published 7/2/86, effective 8/6/86]
[Filed 10/10/86, Notice 11/5/86—published 12/31/86, effective 2/4/87]
[Filed 3/6/87, Notice 1/14/87—published 3/25/87, effective 4/29/87]
[Filed 6/26/87, Notice 12/31/86—published 7/15/87, effective 8/19/87]
[Filed 4/1/88, Notice 9/23/87—published 4/20/88, effective 5/25/88]
[Filed 10/14/88, Notice 9/7/88—published 11/2/88, effective 12/8/88]
[Filed 2/2/89, Notice 12/28/88—published 2/22/89, effective 3/29/89]
[Filed emergency 6/29/89—published 7/26/89, effective 7/1/89]
[Filed 9/1/89, Notice 7/26/89—published 9/20/89, effective 10/25/89]
[Filed 3/16/90, Notice 12/13/89—published 4/4/90, effective 5/9/90]

[Filed 11/26/90, Notice 8/22/90—published 12/12/90, effective 1/16/91]
[Filed 5/10/91, Notice 2/6/91—published 5/29/91, effective 7/3/91]
[Filed emergency 5/17/91—published 6/12/91, effective 5/17/91]
[Filed emergency 6/21/91—published 7/10/91, effective 7/1/91]
[Filed 7/19/91, Notice 6/12/91—published 8/7/91, effective 9/15/91]
[Filed 11/22/91, Notice 7/10/91—published 12/11/91, effective 1/15/92]
[Filed 4/24/92, Notice 2/19/92—published 5/13/92, effective 7/1/92]
[Filed 8/25/92, Notice 5/13/92—published 9/16/92, effective 11/1/92]
[Filed 2/24/93, Notice 12/9/92—published 3/17/93, effective 5/1/93]
[Filed 3/11/94, Notice 1/5/94—published 3/30/94, effective 6/1/94]
[Filed 11/3/95, Notice 8/2/95—published 11/22/95, effective 1/1/96]
[Filed 7/25/96, Notice 6/19/96—published 8/14/96, effective 10/1/96]
[Filed 5/16/97, Notice 3/26/97—published 6/4/97, effective 7/15/97]
[Filed 12/16/98, Notice 6/3/98—published 1/13/99, effective 3/1/99][5]
[Filed 9/30/99, Notice 4/21/99—published 10/20/99, effective 12/1/99]
[Filed 11/9/99, Notice 4/21/99—published 12/1/99, effective 2/1/00]
[Filed emergency 6/30/00—published 7/26/00, effective 7/1/00]
[Filed 1/26/01, Notice 10/4/00—published 2/21/01, effective 4/1/01]
[Filed 3/2/01, Notice 7/12/00—published 3/21/01, effective 5/1/01][3]
[Filed 10/5/01, Notice 5/30/01—published 10/31/01, effective 1/1/02]
[Filed emergency 1/2/02—published 1/23/02, effective 2/1/02]
[Filed 11/8/02, Notice 9/18/02—published 11/27/02, effective 1/1/03]
[Filed emergency 3/10/03—published 4/2/03, effective 3/11/03]
[Filed 9/24/03, Notice 5/28/03—published 10/15/03, effective 12/1/03]
[Filed 10/7/03, Notice 5/28/03—published 10/29/03, effective 1/1/04]
[Filed emergency 3/25/04 after Notice 2/18/04—published 4/14/04, effective 4/1/04]
[Filed 3/25/04, Notice 12/10/03—published 4/14/04, effective 6/1/04][◊]
[Filed 12/14/04, Notice 9/29/04—published 1/5/05, effective 3/1/05]
[Filed emergency 2/25/05—published 3/16/05, effective 3/1/05]
[Filed emergency 5/23/05 after Notice 4/27/05—published 6/22/05, effective 5/24/05]
[Filed 9/22/05, Notice 3/16/05—published 10/12/05, effective 1/1/06]
[Filed emergency 10/6/05 after Notice 8/17/05—published 10/26/05, effective 11/1/05]
[Filed emergency 1/27/06—published 2/15/06, effective 2/1/06]
[Filed emergency 6/27/06—published 7/19/06, effective 7/1/06]
[Filed 9/20/06, Notice 7/5/06—published 10/11/06, effective 12/1/06]
[Filed 11/2/06, Notice 9/13/06—published 11/22/06, effective 1/1/07]

◊ Two or more ARCs

1 Tables published in 6/8/83 IAB

2 Effective date of 661—5.620(100,135C), introductory paragraph, and subrule 5.620(1) delayed 70 days by the Administrative Rules Review Committee at its meeting held February 8, 1999.

3 Effective date of amendments to 5.800 to 5.810 and 5.820 delayed 70 days by the Administrative Rules Review Committee at its meeting held April 6, 2001. These amendments were published in the March 21, 2001, Iowa Administrative Bulletin as ARC 0566B. [See Notice ARC 9970A, IAB 7/12/00.] At its meeting held February 8, 2002, the Committee voted to lift the delay, effective February 9, 2002.At its meeting held June 5, 2001, the Committee voted to delay the effective date until adjournment of the 2002 Session of the General Assembly.

4 Editor's Note:
Effective date of 5.300, 5.301(6), 5.301(7), 5.302, 5.304(2)*"c"*(2), 5.304(3), 5.304(4), 5.305, 5.350 and 5.351 delayed by the Administrative Rules Review Committee 70 days.
Subrule 5.305(3) which was delayed 70 days from November 8, 1979, is renumbered and amended as 5.305(2) to be effective January 17, 1980.
Effective date of 5.400 and 5.450 to 5.452 delayed by the Administrative Rules Review Committee 70 days. These amendments published in IAC 10/3/79, ARC 0596.

5 Effective date of 661—5.620(100,135C), introductory paragraph, and subrule 5.620(1) delayed 70 days by the Administrative Rules Review Committee at its meeting held February 8, 1999.

# CHAPTER 6
# VEHICLE IMPOUNDMENT

[Ch 6 as appeared before 6/27/79 rescinded]
[Prior to 4/20/88, see Public Safety Department[680] Ch 6]

**661—6.1(17A,321) Vehicle impoundment.** The patrol division and other peace officer members of the department may impound any vehicle determined to be "abandoned" as defined in Iowa Code section 321.89(1)*"b,"* provided that:

1. The officer shall first attempt to determine the owner through department of transportation records and request communications division advise an owner found thereby that the vehicle must be moved within a reasonable time or it will be impounded, and

2. Either the owner cannot be found or the owner fails to remove the vehicle within a reasonable time.

**661—6.2(17A,321) Vehicles which may be impounded immediately.**

**6.2(1)** Vehicles which an officer has reason to believe are wrongfully possessed by the person then having control of such vehicles or on which the vehicle identification number or the identification numbers of any component part have been altered or defaced, or on which an attempt to alter or deface has been made.

**6.2(2)** Vehicles which are involved in an accident when immediate impoundment is necessary:

*a.* To preserve evidence which will be used in an administrative or judicial proceeding; or

*b.* To protect the vehicle from theft or further damage when the legal custodian is unavailable or incapable to give consent to such impoundment; or

*c.* To prevent further accidents when the vehicle is so situated as to appear to constitute a hazard to traffic.

**6.2(3)** Vehicles which an officer has reason to believe are being used to transport contraband.

**6.2(4)** Vehicles involved in a person's death when the medical examiner or a peace officer determines:

*a.* That seizure is necessary to secure evidence needed in the investigation of the cause and manner of death.

*b.* That circumstances indicate the vehicle may be removed or tampered with before written authorization for its impoundment can be obtained.

*c.* That the vehicle is situated on a public highway in such a manner that it may constitute a hazard to traffic.

**6.2(5)** Vehicles under the control of a person at the time of arrest:

*a.* If the arrested person's vehicle reasonably appears to a peace officer to constitute a traffic hazard if it remains where it is situated at the time of arrest and the arrested person is unwilling or unable to have it moved; or

*b.* To preserve evidence which will be used in an administrative or judicial proceeding; or

*c.* To protect the vehicle from theft or further damage when the legal custodian is unavailable or incapable to give consent to such impoundment.

**6.2(6)** Vehicles positioned upon a public highway in such a location as to indicate that they constitute a hazard to traffic.

**661—6.3(17A,321) Vehicles which need not be impounded immediately.**

**6.3(1)** If a vehicle is unattended, an officer shall tag it. A record is kept by the officer at the district to which the officer is assigned. After the period of time prescribed in Iowa Code section 321.89, the unattended vehicle shall be declared an abandoned vehicle.

**6.3(2)** If the vehicle is thought to be abandoned, the officer shall attempt to determine the owner through department of transportation records, and request that the communications division advise the owner that the vehicle must be moved within a reasonable time or it will be impounded. If the owner cannot be contacted, or if the owner does not remove the vehicle, the vehicle may be impounded.

**661—6.4(17A,321) Impoundment procedure.**

**6.4(1)** Prior to towing an impounded vehicle, the officer shall:

*a.* Request that a tow truck be dispatched to remove the vehicle.

*b.* Complete a vehicle tow-in and recovery report which includes the following information:

(1) Reason for towing;

(2) The license number and description of the vehicle including its condition at the time of impoundment;

(3) Vehicle identification number and registration information, when readily accessible.

*c.* Instruct the towing service to tow the vehicle to a designated location, which in the case of an abandoned vehicle shall be the towing service's storage area.

**6.4(2)** Within 24 hours of towing an impounded vehicle, the officer shall:

*a.* Complete an inventory of all property in the vehicle and a notation of any parts of the vehicle which appear to be missing or damaged. The inventory shall include a list of the contents of each container in the vehicle. Each container shall be opened unless the contents of a particular container are evident from its exterior. If keys, a locksmith, or other means of access are not reasonably available to the officer, the officer is authorized to break locks to gain access to the vehicle and its locked compartments. The inventory is a record which is intended for use in ensuring the safe return of the lawful possessor's property and resolving questions regarding the condition or contents of the vehicle.

*b.* Add to the vehicle tow-in and recovery report information indicating the circumstances of recovery of the vehicle and notification of the owner if the vehicle is believed to be stolen or operated without the consent of the owner.

EXCEPTION: The inventory and completion of the report may be delayed beyond 24 hours after towing of the impounded vehicle has occurred if completion within a 24-hour period is rendered impracticable by road or weather conditions or by the volume of impounded vehicles requiring processing during a limited period of time. Such an extension of time shall be granted automatically if the office processing the vehicles is affected by a disaster emergency proclamation issued by the governor pursuant to Iowa Code section 29C.6 and may otherwise be granted by written permission of the commander of the district or zone office or another supervisor designated by the commander of the officer responsible for processing an impounded vehicle. The reason for any delay in completing the inventory and report beyond 24 hours after towing a vehicle shall be noted in the report. In any event, the inventory and report shall be completed as soon as practicable after towing the vehicle.

This rule is intended to implement Iowa Code sections 80.9(2)*"a"* and 321.89.

**661—6.5(17A,321) Abandoned vehicles.** If the vehicle is impounded pursuant to rule 661—6.1(17A,321):

**6.5(1)** The district officer in charge of abandoned vehicles shall notify, within 20 days of impoundment, by certified mail, the last known registered owner of the vehicle and all lienholders of record, addressed to their last known address of record, that the abandoned vehicle has been impounded. Such notice shall state:

*a.* The location of the vehicle.

*b.* That the person or persons notified have the right to reclaim the vehicle within 21 days of notice upon payment of all towing, preservation and storage charges resulting from impoundment.

*c.* That failure to reclaim the vehicle within 21 days will constitute a waiver of all right, title, claim and interest in the vehicle and will also constitute the giving of consent to sale or disposal of the vehicle.

*d.* That a written objection to the impoundment may be filed in accordance with subrule 6.5(3).

**6.5(2)** When the district officer in charge of abandoned vehicles is unable to determine the identity or address of the last known registered owner or of any lienholders of record, the officer shall cause to be published once in a newspaper of general circulation in the area where the abandoned vehicle was found, a notice containing all the information otherwise required by subrule 6.5(1).

**6.5(3)** Registered owners or lienholders of record may, within the 21-day reclamation period, submit a written objection to the initial impoundment or to any procedure followed by the patrol officer or towing agent. Such objection shall contain an explanation of why the objector believes the impoundment was

not authorized by law. When an objection is received by the district officer in charge of abandoned vehicles, such officer shall:

*a.* Immediately consider the objection and make an initial decision as to the legality of the impoundment,

*b.* Immediately thereafter notify the objector of the decision. Such notice shall state either:

(1) That the impoundment was authorized by law, and explain the basis of such decision, or

(2) That the impoundment was not authorized by law, that the vehicle will be released to the objector upon presentation of proof of ownership at district headquarters, and that no towing or storage fees will be assessed for 21 days, and

*c.* File a copy of the notice required by subrule 6.5(3), paragraph *"b,"* with other documents kept in connection with the impoundment.

**6.5(4)** The registered owner and any lienholders of record have 21 days in which to reclaim the vehicle after mailing or date of publication of notice as prescribed in subrules 6.5(1) and 6.5(2), except where written objection to impoundment has been made in accordance with subrule 6.5(3), in which case the 21-day period shall begin when notice of the district officer's response to the objection is mailed. An additional 14 days will be allowed if the owner or any lienholder submits a written request for an extension of the 21-day reclamation period.

**6.5(5)** If the reclamation period has expired, and either the registered owner or any lienholder of record has made no written objection to the impoundment, or an objection has been filed and the district officer has determined that the impoundment was authorized by law, then all rights of the owner or of any lienholders of record with regard to the impounded vehicle are forfeited and the vehicle will be either:

*a.* Sold for use upon the highway after an inspection and certification that it is safe for such use in accordance with Iowa Code section 321.238; or

*b.* Sold for junk, demolished, and sold as scrap, or

*c.* Sold as provided in Iowa Code section 321.88 with a restricted certificate of title and not for use on the highways.

**6.5(6)** When the vehicle is sold:

*a.* The circumstances of the sale shall be entered in appropriate records kept by the district officer in charge of abandoned vehicles.

*b.* The required department of transportation forms shall be completed by the officer, given to the purchaser, and mailed to the abandoned vehicle section of the motor vehicle division of the department of transportation. The motor vehicle division shall then take action regarding the funds collected or expended.

**6.5(7)** If the registered owner or any lienholders of record have filed written objection to the impoundment in accordance with subrule 6.5(3) and the district officer has determined that the impoundment was not authorized by law, towing and storage fees will not be assessed unless the objector, after receipt of notice of such determination, fails to reclaim the vehicle within the reclamation period provided in subrule 6.5(4). If the vehicle is not reclaimed during the reclamation period, said fees shall be deemed "abandoned," and subject to forfeiture and sale if not claimed within 60 days of receipt of notice from the district officer pursuant to subrule 5.4(3).

**661—6.6(321) Scope.** Nothing in this chapter shall be construed to limit an officer's authority to seize or search an individual, vehicle, or location upon probable cause or as otherwise justified by law.

These rules are intended to implement Iowa Code sections 80.9(2)*"a"* and 321.89 and *Florida v. Wells,* 110 Sup. Ct. 1632.

[Filed 6/7/79, Notice 5/2/79—published 6/27/79, effective 8/2/79]
[Filed 4/22/83, Notice 3/16/83—published 5/11/83, effective 6/15/83]
[Filed 4/1/88, Notice 9/23/87—published 4/20/88, effective 5/25/88]
[Filed emergency 7/30/90—published 8/22/90, effective 8/1/90]

[Filed emergency 2/1/91—published 2/20/91, effective 3/1/91]
[Filed 2/1/91, Notice 8/22/90—published 2/20/91, effective 3/27/91][1]
[Filed 10/24/91, Notice 8/7/91—published 11/13/91, effective 1/1/92]
[Filed emergency 6/30/08—published 7/30/08, effective 7/1/08]

[1] Effective date of 3/27/91 delayed 70 days by the Administrative Rules Review Committee at its meeting held March 11, 1991. Delay lifted, effective 5/16/91.

# CHAPTER 7
# IGNITION INTERLOCK DEVICES

[Ch 7 as appeared prior to 6/27/79 rescinded]
[Rules 7.1 to 7.5 appeared as rule 3.13 prior to 6/27/79]
[Prior to 4/20/88, see Public Safety Department[680] Ch 7]

**661—7.1(321J) Approval of devices and methods to test for alcohol or drug concentration.** Rescinded IAB 4/25/07, effective 6/1/07.

**661—7.2(321J) Direct breath testing.** Rescinded IAB 4/25/07, effective 6/1/07.

**661—7.3(321J) Urine collection.** Rescinded IAB 4/25/07, effective 6/1/07.

**661—7.4(321J) Submission of samples for alcohol and drug testing to the department's criminalistics laboratory.** Rescinded IAB 4/25/07, effective 6/1/07.

**661—7.5(321J) Preliminary breath screening test.** Rescinded IAB 4/25/07, effective 6/1/07.

**661—7.6** Rescinded IAB 7/26/89, effective 7/1/89.

**661—7.7(321J) Chemical test—alcohol concentration—public intoxication.** Rescinded IAB 4/25/07, effective 6/1/07.

**661—7.8(321J) Breath alcohol ignition interlock device.**

**7.8(1)** An ignition interlock device, installed pursuant to court order or other provisions of law, shall meet the following criteria:

*a.* The ignition interlock device shall be designed and constructed to measure a person's breath alcohol concentration by utilizing a sample of the person's breath delivered directly into the device.

*b.* The ignition interlock device shall be designed and constructed so that the ignition system of the vehicle in which it is installed will not be activated if the alcohol concentration of the person using the device exceeds the level permitted by subrule 7.8(4).

*c.* The division of criminal investigation criminalistics laboratory shall apply scientific tests or methods to a particular device in determining whether it meets an acceptable standard for accuracy. The criminalistics laboratory may accept test results from other laboratories or authorities at the discretion of the laboratory administrator.

*d.* The ignition interlock device shall meet or exceed performance standards contained in the Model Specifications for Breath Alcohol Ignition Interlock Devices, as published in the Federal Register, April 7, 1992, pages 11772 through 11787.

**7.8(2)** The division of criminal investigation criminalistics laboratory shall maintain a list of ignition interlock devices approved by the commissioner of public safety.

**7.8(3)** An ignition interlock device utilized under these rules shall be installed and removed by the manufacturer or by a private sector installer in conformance with the prescribed procedures of the manufacturer. The ignition interlock device shall be used in conformance with the manufacturer's instructions which shall include instructions recommending a minimum 15-minute waiting period between the last drink of an alcoholic beverage and the time of breath sample delivery into the ignition interlock device. The ignition interlock device shall be installed in such a way that the ignition system of the vehicle will not be activated if the person fails the test by exceeding the alcohol concentration prescribed in subrule 7.8(4).

**7.8(4)** A person shall fail an ignition interlock device test when the person's alcohol concentration, as defined in Iowa Code section 321J.1, is greater than 0.025.

**7.8(5)** An ignition interlock device utilized under these rules shall be calibrated at least once every 60 days using either a wet bath simulator or a dry gas standard (minimum 5 cubic foot volume). Calibration shall be completed by the distributor of the ignition interlock device. In lieu of calibration of an installed ignition interlock device, an installed device may be exchanged for another calibrated device.

The calibration record for the ignition interlock device currently installed in a vehicle pursuant to Iowa Code section 321J.4 and this rule and for any other ignition interlock device previously installed in the same vehicle pursuant to the same court order shall be maintained by the distributor and the record shall include:

*a.* Name of the person performing the calibration;

*b.* Date;

*c.* Value and type of standard used;

*d.* Unit type and identification number of the ignition interlock device checked;

*e.* Description of the vehicle in which the ignition interlock device is installed, including the registration plate number and state, make, model, vehicle identification number (VIN), year, and color.

Documentation of calibration shall be kept with the vehicle at all times for inspection by a peace officer, the court which ordered installation of the device, or the Iowa department of transportation.

**7.8(6)** An ignition interlock device shall prevent engine ignition if the ignition interlock device has not been calibrated within a period of 67 days subsequent to the last calibration under subrule 7.8(5).

**7.8(7)** An ignition interlock device shall record each time the vehicle is started, the results of the test, how long the vehicle was operated, and any indications of bypassing or tampering with the ignition interlock device.

**7.8(8)** An ignition interlock device shall require the operator of the vehicle to submit to a retest within 10 minutes of starting the vehicle. Retesting shall continue at intervals not to exceed 60 minutes after the first retest. Retests may be achieved during operation of the vehicle. The ignition interlock device shall enter a lockout condition in 5 days if a retest is not performed, or the result of a retest exceeds the maximum allowable alcohol concentration as prescribed in subrule 7.8(4). An ignition interlock device which enters a lockout condition shall be returned to the site of installation for service.

**7.8(9)** An ignition interlock device shall permit a sample-free restart, for a period of 2 minutes or less, after a stall.

**7.8(10)** The ignition interlock device shall be equipped with a method of immediately notifying peace officers if the retest under subrule 7.8(8) is not performed, or if the result of the retest exceeds the alcohol concentration as prescribed in subrule 7.8(4).

**7.8(11)** The installer shall inform the division of criminal investigation state criminalistics laboratory, the Iowa department of transportation, the county attorney, and the court which ordered the installation of an ignition interlock device of any violation of these rules.

**7.8(12)** The installer of an ignition interlock device shall use known alcohol standards. Either a dry gas standard or a wet bath simulator shall be used to calibrate the ignition interlock device. The installer shall have a method of verifying the accuracy of the wet alcohol standard. The recommended method is the use of an evidential breath tester approved by the commissioner of public safety in accordance with rule 661—7.2(321J). Alcohol standard verification records shall be kept.

**7.8(13)** The department of public safety may, at the department's discretion, inspect any ignition interlock device manufacturer or service provider at any time. All records of devices installed, results of calibrations, results of known alcohol standards, and data downloaded from ignition interlock devices shall be made available for inspection upon request to representatives of the department of public safety or the department of transportation or to any peace officer. The results of the inspection shall be made available to the manufacturer or service provider and to the department of transportation.

**7.8(14)** Each installer or distributor of ignition interlock devices approved for use in Iowa pursuant to this rule shall maintain general liability insurance coverage effective in Iowa, and issued by an insurance carrier authorized to operate in Iowa by the Iowa division of insurance, in an amount of not less than $1 million. Each installer or distributor shall furnish the division of criminal investigation with proof of this insurance coverage in the form of a certificate of insurance from the insurance company issuing the policy. All insurance policies required by this subrule shall carry an endorsement requiring that the division of criminal investigation criminalistics laboratory be provided with written notice of cancellation of insurance coverage required by this subrule at least ten days prior to the effective date of cancellation.

**7.8(15)** Any distributor or installer of ignition interlock devices in Iowa shall cease installing or distributing these devices immediately if any of the following occur:

*a.* The insurance coverage required under subrule 7.8(14) lapses.

*b.* Approval by the commissioner of public safety pursuant to Iowa Code sections 321J.4 and 321J.20 of an ignition interlock device which they distribute or install ceases to be valid. If approval by the commissioner of public safety for distribution or installation of an ignition interlock device in Iowa ceases to be valid, a distributor or installer of such a device may continue to distribute or install another ignition interlock device currently approved for use in Iowa, unless the distributor or installer has been ordered by the commissioner of public safety to cease operation as a distributor or installer of ignition interlock devices in Iowa, pursuant to 7.8(15)*"c."*

*c.* The commissioner of public safety orders the distributor or installer to cease operation as a distributor or installer of ignition interlock devices, and the order has become effective. An order to cease operation may be issued for cause including, but not limited to, any one or more of the following:

(1) Any act of theft or fraud including, but not limited to, violation of Iowa Code chapter 714, or any act of deception or material omission of fact related to the distribution, installation, or operation of any device subject to this chapter.

(2) Any violation of Iowa Code chapter 321J.

(3) Any violation of this chapter.

(4) Any act involving moral turpitude. For purposes of this rule, "moral turpitude" is an act of baseness, vileness, or depravity or conduct which is contrary to justice, honesty, or good morals.

An order to cease operation shall be delivered to the distributor or installer to whom the order is issued at the distributor or installer's place of business or, if this is not practical, at the residence or last-known mailing address of the owner of the business or an officer of the corporation which owns the business, if applicable. Notice shall be given in writing either by personal service or by restricted certified mail.

An order to cease operation as an installer or distributor of ignition interlock devices shall be effective 30 days after its transmittal by the department, unless the order is appealed. An order shall not become effective if it has been appealed until agency action on the appeal process is completed.

EXCEPTION: Upon a finding by the commissioner of public safety that the continued operation of an installer or distributor of ignition interlock devices presents an imminent threat to public safety, an order to cease operation shall become effective immediately upon receipt by the installer or distributor. Notice in these cases shall be by personal service.

An order to cease operation in Iowa as a distributor or installer of ignition interlock devices may be appealed to the department of public safety by filing a protest in accordance with the procedures specified in rule 661—10.101(17A), within ten days of the issuance of the order to cease operation.

This rule is intended to implement Iowa Code chapter 321J.

**661—7.9(321J) Detection of drugs other than alcohol.** Rescinded IAB 4/25/07, effective 6/1/07.

[Filed 6/30/75]
[Filed 3/15/76, Notice 2/9/76—published 4/5/76, effective 5/10/76]
[Filed 1/18/77, Notice 11/17/76—published 2/9/77, effective 3/16/77]
[Filed 10/3/77, Notice 8/24/77—published 10/19/77, effective 11/23/77]
[Filed 3/31/78, Notice 2/22/78—published 4/19/78, effective 5/24/78]
[Filed 6/5/78, Notice 3/8/78—published 6/28/78, effective 8/2/78]
[Filed 6/7/79, Notice 5/2/79—published 6/27/79, effective 8/2/79]
[Filed emergency 11/20/79—published 12/12/79, effective 12/12/79]
[Filed emergency 5/28/82—published 6/23/82, effective 7/1/82]
[Filed 6/29/83, Notice 4/13/83—published 7/20/83, effective 8/25/83]
[Filed emergency 8/29/83—published 9/28/83, effective 8/29/83]
[Filed 11/1/84, Notice 7/4/84—published 11/21/84, effective 12/26/84]
[Filed emergency 6/26/86—published 7/16/86, effective 7/1/86]
[Filed 7/25/86, Notice 6/18/86—published 8/13/86, effective 9/17/86]
[Filed emergency 8/22/86—published 9/10/86, effective 8/22/86]
[Filed 10/17/86, Notice 9/10/86—published 11/5/86, effective 12/10/86]

[Filed 4/1/88, Notice 9/23/87—published 4/20/88, effective 5/25/88]
[Filed emergency 7/1/88—published 7/27/88, effective 7/1/88]
[Filed emergency 11/23/88—published 12/14/88, effective 12/1/88]
[Filed 11/28/88, Notice 7/27/88—published 12/14/88, effective 1/18/89]
[Filed emergency 6/29/89—published 7/26/89, effective 7/1/89]
[Filed 7/19/91, Notice 5/15/91—published 8/7/91, effective 9/15/91]
[Filed 8/28/92, Notice 7/8/92—published 9/16/92, effective 11/1/92]
[Filed 1/27/95, Notices 9/14/94, 12/7/94—published 2/15/95, effective 4/1/95]
[Filed 3/7/97, Notice 10/9/96—published 3/26/97, effective 6/1/97]
[Filed 8/29/97, Notice 4/9/97—published 9/24/97, effective 11/1/97]
[Filed emergency 6/26/98—published 7/15/98, effective 7/1/98]
[Filed 2/5/99, Notice 7/15/98—published 2/24/99, effective 5/1/99]
[Filed 9/16/99, Notice 3/24/99—published 10/6/99, effective 12/1/99]
[Filed emergency 1/18/02—published 2/6/02, effective 2/1/02]
[Filed 6/5/02, Notice 2/6/02—published 6/26/02, effective 8/1/02]
[Filed emergency 4/24/03—published 5/14/03, effective 5/1/03]
[Filed 4/2/07, Notice 9/13/06—published 4/25/07, effective 6/1/07]

# CHAPTER 8
# CRIMINAL JUSTICE INFORMATION
[Prior to 4/20/88, see Public Safety Department[680] Ch 8]

**661—8.1** to **8.100** Reserved.

## DIVISION I
## IOWA ON-LINE WARRANTS AND ARTICLES SYSTEM
[Prior to 8/16/95, see 661—8.1 to 8.101]

**661—8.101(80,692) Iowa on-line warrants and articles (IOWA) criminal justice information system.** The Iowa on-line warrants and articles (IOWA) criminal justice information system is administered by the division of administrative services, field services bureau. The IOWA system, created pursuant to Iowa Code paragraph 80.9(2)*"d"* and Iowa Code section 692.14, provides criminal justice agency access to traffic record and criminal justice databases through a dedicated telecommunications network. To be eligible for access to the IOWA system, an agency must be a criminal justice agency at the federal, state, or local level within Iowa, or an agency providing services to criminal justice agencies in Iowa.

**661—8.102(80,692) Information available through the IOWA system.** The IOWA system provides access to databases from various state agencies within Iowa, from the Federal Bureau of Investigation's National Crime Information Center (NCIC), and from the motor vehicle departments of other states nationally through the National Law Enforcement Telecommunications System (NLETS). Information on an international basis is also provided by NCIC and NLETS through interfaces to Canadian Police Information Centre and to INTERPOL. The NLETS system also provides administrative message traffic between Iowa criminal justice agencies and criminal justice agencies throughout the United States.

The IOWA system allows criminal justice agencies to:

1. Access nationwide computerized banks of information such as wanted, missing, and unidentified persons; stolen vehicles; stolen articles; stolen boats; stolen guns and stolen securities.
2. Access driver license and motor vehicle information in-state as well as out-of-state.
3. Exchange criminal history information on a national basis.
4. Communicate by use of administrative messages with other criminal justice agencies worldwide.

**661—8.103(80) Human immunodeficiency virus-related information.** An agency may enter human immunodeficiency virus-related (HIV) information into a wanted or missing person file of the IOWA system and the National Crime Information Center operated by the Federal Bureau of Investigation. HIV information shall be kept confidential and may be communicated only in accordance with this rule.

**8.103(1)** HIV information on an individual entered into the IOWA system or the National Crime Information Center operated by the Federal Bureau of Investigation shall be made available to terminal operators for the purpose of informing individuals who are authorized access pursuant to this rule.

**8.103(2)** HIV information may be communicated to:

*a.* Employees and supervisors of employees of a law enforcement agency who have, or are expected to have, direct physical control of an individual reported to be HIV positive.

*b.* Employees and supervisors of employees subject to the jurisdictional supervision of the Iowa department of corrections who have, or are expected to have, direct physical supervision of an individual reported to be HIV positive.

*c.* Employees and supervisors of employees of secure facilities for juveniles subject to the jurisdiction of the Iowa department of human services who have, or are expected to have, direct physical supervision of an individual reported to be HIV positive.

*d.* Employees and supervisors of employees of city and county jails who have, or are expected to have, direct physical supervision of an individual reported to be HIV positive.

**8.103(3)** HIV information shall not be transmitted over any law enforcement radio broadcasting system, cellular telephone system, radio telephone system, or any other radio-based communications system. This provision shall not apply to the transmission of HIV information in data form to or from mobile digital terminals or mobile digital computers authorized access to the IOWA system and operated by a law enforcement officer or certified IOWA system operator in the performance of official duties.

**8.103(4)** Individuals who receive HIV information pursuant to this rule shall use the information solely for the purpose of the protection of those individuals having or expected to have direct contact with individuals reported to be HIV positive, and for the prevention of the spread of the HIV virus. Information shall be provided only to individuals and their supervisors who have direct physical contact with persons reported to have the HIV virus. Except as provided in subrule 8.103(2), information obtained pursuant to this rule shall not be communicated to any person not employed by the agency employing the person providing it or used outside the agency for any purpose.

**8.103(5)** Individuals who are authorized to receive HIV information pursuant to this rule shall receive training developed and established by the commissioner of public safety, in cooperation with the department of corrections and the department of public health, regarding the confidentiality standards applicable to HIV information received from the IOWA system or the National Crime Information Center.

**661—8.104(80,692) IOWA system security.** IOWA system terminal access shall be available to criminal justice agencies as defined by Iowa Code section 692.1(7). Prior to being permitted terminal access to the IOWA system, a criminal justice agency shall meet the following criteria:

**8.104(1)** All terminals shall be located within the facilities or vehicles of authorized agencies where appropriate physical security can be maintained.

**8.104(2)** The immediate terminal areas shall be restricted to prevent access by unauthorized individuals.

**8.104(3)** All persons accessing NCIC and the criminal history files shall have been authorized to operate the terminal by the criminal justice agency administrator, been approved by the department of public safety, received the required training and achieved proficiency certification by the department of public safety.

Agencies shall complete a background investigation on all applicants for positions with access to NCIC and criminal history files. Agencies shall notify the department of public safety of the completion of the required background investigation. The background investigation shall be done to ensure the following:

*a.* That the applicant is 18 years of age or older at the time of appointment to the position.

*b.* That the applicant is not addicted to drugs or alcohol.

*c.* That the applicant is of good moral character and has not been convicted of a serious crime.

*d.* Agencies shall submit two fingerprint cards on all applicants to the Iowa division of criminal investigation. One card will be used to check for any Iowa criminal history and the second card will be forwarded to the FBI for a national search of criminal history records.

**8.104(4)** Where IOWA system terminals are not operated on a 24-hour-per-day basis, the terminals shall be physically secured when unattended.

**8.104(5)** The criminal justice agency administrator shall be directly responsible for ensuring that information received from the IOWA system is restricted for the official use of agency personnel, other criminal justice agencies, or other agencies authorized, in writing, by the department of public safety.

**8.104(6)** Any agency desiring direct access to IOWA system files shall make application to the department. Before authorization is granted, the administrator of the applying agency shall enter into a written agreement with the department of public safety agreeing to abide by all rules, policies and procedures promulgated by the department for system operation, security and discipline. The agreement shall reserve to the department the right to terminate furnishing criminal history or other file information to the applicant agency if abuses are discovered concerning either the security or dissemination requirements of this data.

**8.104(7)** Any agency which has had its authorization to IOWA system files terminated by the department may appeal the termination to the commissioner of public safety, in accordance with 661—Chapter 10.

**661—8.105(80,692) Subpoenas and court orders.** Any agency or individual in possession of criminal history data received from the department that is served with a subpoena, court order, request for production or other legal process demanding the production of criminal history data, shall notify the department in writing so that the department has an opportunity to make a timely resistance.

**661—8.106** to **8.200** Reserved.

These rules are intended to implement Iowa Code sections 80.9 and 692.14.

DIVISION II
CRIMINAL INTELLIGENCE INFORMATION

Rescinded IAB 11/8/06, effective 1/1/07; see 661—Chapter 81

**661—8.201** to **8.300** Reserved.

DIVISION III
IOWA SEX OFFENDER REGISTRY

Rescinded IAB 2/16/05, effective 4/1/05; see 661—Ch 83

[Filed June 30, 1975]
[Filed 6/7/79, Notice 5/2/79—published 6/27/79, effective 8/2/79]
[Filed 1/10/86, Notice 11/20/85—published 1/29/86, effective 3/6/86]
[Filed 4/1/88, Notice 9/23/87—published 4/20/88, effective 5/25/88]
[Filed emergency 9/27/94—published 10/26/94, effective 10/1/94]
[Filed emergency 6/29/95—published 7/19/95, effective 7/1/95]
[Filed 7/26/95, Notice 3/1/95—published 8/16/95, effective 10/1/95]
[Filed 10/30/97, Notice 7/2/97—published 11/19/97, effective 1/1/98]
[Filed emergency 6/26/98—published 7/15/98, effective 7/1/98]
[Filed emergency 6/30/99—published 7/28/99, effective 7/1/99]
[Filed emergency 6/29/00—published 7/26/00, effective 7/1/00]
[Filed 2/22/01, Notice 7/26/00—published 3/21/01, effective 5/1/01]
[Filed emergency 4/30/01—published 5/30/01, effective 5/1/01]
[Filed emergency 6/5/02—published 6/26/02, effective 7/1/02]
[Filed emergency 4/24/03—published 5/14/03, effective 5/1/03]
[Filed emergency 7/13/04—published 8/4/04, effective 7/15/04]
[Filed 1/26/05, Notice 9/29/04—published 2/16/05, effective 4/1/05]
[Filed 10/19/06, Notice 9/13/06—published 11/8/06, effective 1/1/07]

# CHAPTER 9
# COMPLAINT AGAINST AN EMPLOYEE

[Ch 9 as appeared prior to 6/27/79 is published as follows: Rule 9.1 rescinded and 9.100 to 9.105 renumbered as 15.1 to 15.6]

[Prior to 4/20/88, see Public Safety Department[680] Ch 9]

Rescinded IAB 11/8/06, effective 1/1/07

# CHAPTER 10
# PRACTICE AND PROCEDURE BEFORE THE DEPARTMENT OF PUBLIC SAFETY

[Ch 10 as appeared in 1973 IDR, transferred to Transportation Department]
[Prior to 4/20/88, see Public Safety Department, 680—Ch 10]

**661—10.1(17A) Definitions.** The following definitions apply to this chapter unless otherwise specified.

*"Commissioner"* means the commissioner of the department of public safety.

*"Department"* means the department of public safety.

*"Waiver"* or *"variance"* means an action by the department which suspends, in whole or in part, the requirements or provisions of a rule as applied to an identified person on the basis of the particular circumstances of that person. For simplicity, the term "waiver" shall include both a "waiver" and a "variance."

**661—10.2** to **10.100** Reserved.

## DECLARATORY ORDERS

**661—10.101(17A) Petition for declaratory order.** Any person may file a petition with the department for a declaratory order as to the applicability to specified circumstances of a statute, rule, or order within the primary jurisdiction of the department, at the Administrative Services Division, Department of Public Safety, Wallace State Office Building, Des Moines, Iowa 50319. A petition is deemed filed when it is received by that office. The department shall provide the petitioner with a file-stamped copy of the petition if the petitioner provides the agency an extra copy for this purpose. The petition must be typewritten or legibly handwritten in ink and must substantially conform to the following form:

DEPARTMENT OF PUBLIC SAFETY

| | |
|---|---|
| Petition by (Name of Petitioner)<br>for a Declaratory Order on<br>(Cite provisions of law involved). | PETITION FOR<br>DECLARATORY ORDER |

The petition must provide the following information:

1. A clear and concise statement of all relevant facts on which the order is requested.
2. A citation and the relevant language of the specific statutes, rules, policies, decisions, or orders, whose applicability is questioned, and any other relevant law.
3. The questions petitioner wants answered, stated clearly and concisely.
4. The answers to the questions desired by the petitioner and a summary of the reasons urged by the petitioner in support of those answers.
5. The reasons for requesting the declaratory order and disclosure of the petitioner's interest in the outcome.
6. A statement indicating whether the petitioner is currently a party to another proceeding involving the questions at issue and whether, to the petitioner's knowledge, those questions have been decided by, are pending determination by, or are under investigation by, any governmental entity.
7. The names and addresses of other persons, or a description of any class of persons, known by petitioner to be affected by, or interested in, the questions presented in the petition.
8. Any request by petitioner for a meeting provided for by 10.107(17A).

The petition must be dated and signed by the petitioner or the petitioner's representative. It must also include the name, mailing address, and telephone number of the petitioner and petitioner's representative and a statement indicating the person to whom communications concerning the petition should be directed.

**661—10.102(17A) Notice of petition.** Within 15 days after receipt of a petition for a declaratory order, the department shall give notice of the petition to all persons not served by the petitioner pursuant to

10.106(17A) to whom notice is required by any provision of law. The department may also give notice to any other persons.

**661—10.103(17A) Intervention.**

**10.103(1)** Any person who qualifies under any applicable provision of law as an intervenor and who files a petition for intervention within 20 days of the filing of a petition for declaratory order (after time for notice under 10.102(17A) and before 30-day time for agency action under 10.108(17A)) shall be allowed to intervene in a proceeding for a declaratory order.

**10.103(2)** Any person who files a petition for intervention at any time prior to the issuance of an order may be allowed to intervene in a proceeding for a declaratory order at the discretion of the department.

**10.103(3)** A petition for intervention shall be filed at the Administrative Services Division, Department of Public Safety, Wallace State Office Building, Des Moines, Iowa 50319. Such a petition is deemed filed when it is received by that office. The department shall provide the petitioner with a file-stamped copy of the petition for intervention if the petitioner provides an extra copy for this purpose. A petition for intervention must be typewritten or legibly handwritten in ink and must substantially conform to the following form:

DEPARTMENT OF PUBLIC SAFETY

| | |
|---|---|
| Petition by (Name of Original Petitioner) for a Declaratory Order on (Cite provisions of law cited in original petition). } | PETITION FOR INTERVENTION |

The petition for intervention must provide the following information:

1. Facts supporting the intervenor's standing and qualifications for intervention.
2. The answers urged by the intervenor to the question or questions presented and a summary of the reasons urged in support of those answers.
3. Reasons for requesting intervention and disclosure of the intervenor's interest in the outcome.
4. A statement indicating whether the intervenor is currently a party to any proceeding involving the questions at issue and whether, to the intervenor's knowledge, those questions have been decided by, are pending determination by, or are under investigation by, any governmental entity.
5. The names and addresses of any additional persons, or a description of any additional class of persons, known by the intervenor to be affected by, or interested in, the questions presented.
6. Whether the intervenor consents to be bound by the determination of the matters presented in the declaratory order proceeding.

The petition must be dated and signed by the intervenor or the intervenor's representative. It must also include the name, mailing address, and telephone number of the intervenor and intervenor's representative, and a statement indicating the person to whom communications should be directed.

**661—10.104(17A) Briefs.** The petitioner or any intervenor may file a brief in support of the position urged. The department may request a brief from the petitioner, any intervenor, or any other person concerning the questions raised.

**661—10.105(17A) Inquiries.** Inquiries concerning the status of a declaratory order proceeding may be made to the Director, Administrative Services Division, Department of Public Safety, Wallace State Office Building, Des Moines, Iowa 50319.

**661—10.106(17A) Service and filing of petitions and other papers.**

**10.106(1)** *When service required.* Except where otherwise provided by law, every petition for declaratory order, petition for intervention, brief, or other paper filed in a proceeding for a declaratory order shall be served upon each of the parties of record to the proceeding, and on all other persons identified in the petition for declaratory order or petition for intervention as affected by or interested in the questions presented, simultaneously with their filing. The party filing a document is responsible for service on all parties and other affected or interested persons.

**10.106(2)** *Filing—when required.* All petitions for declaratory orders, petitions for intervention, briefs, or other papers in a proceeding for a declaratory order shall be filed with the Administrative Services Division, Department of Public Safety, Wallace State Office Building, Des Moines, Iowa 50319. All petitions, briefs, or other papers that are required to be served upon a party shall be filed simultaneously with the department.

**10.106(3)** *Method of service, time of filing, and proof of mailing.* Method of service, time of filing, and proof of mailing shall be as provided by rule 10.312(17A).

**661—10.107(17A) Consideration.** Upon request by petitioner, the department may schedule a brief and informal meeting between the original petitioner, all intervenors, and the department, a member of the department, or a member of the staff of the department, to discuss the questions raised. The department may solicit comments from any person on the questions raised. Also, comments on the questions raised may be submitted to the department by any person.

**661—10.108(17A) Action on petition.**

**10.108(1)** Within the time allowed by 1998 Iowa Acts, chapter 1202, section 13(5), after receipt of a petition for a declaratory order, the commissioner of public safety or the commissioner's designee shall take action on the petition as required by 1998 Iowa Acts, chapter 1202, section 13(5).

**10.108(2)** The date of issuance of an order or of a refusal to issue an order is as defined in rule 10.302(17A).

**661—10.109(17A) Refusal to issue order.**

**10.109(1)** The department shall not issue a declaratory order where prohibited by 1998 Iowa Acts, chapter 1202, section 13(1), and may refuse to issue a declaratory order on some or all questions raised for the following reasons:

1. The petition does not substantially comply with the required form.
2. The petition does not contain facts sufficient to demonstrate that the petitioner will be aggrieved or adversely affected by the failure of the department to issue an order.
3. The department does not have jurisdiction over the questions presented in the petition.
4. The questions presented by the petition are also presented in a current rule making, contested case, or other agency or judicial proceeding, that may definitively resolve them.
5. The questions presented by the petition would more properly be resolved in a different type of proceeding or by another body with jurisdiction over the matter.
6. The facts or questions presented in the petition are unclear, overbroad, insufficient, or otherwise inappropriate as a basis upon which to issue an order.
7. There is no need to issue an order because the questions raised in the petition have been settled due to a change in circumstances.
8. The petition is not based upon facts calculated to aid in the planning of future conduct but is, instead, based solely upon prior conduct in an effort to establish the effect of that conduct or to challenge an agency decision already made.
9. The petition requests a declaratory order that would necessarily determine the legal rights, duties, or responsibilities of other persons who have not joined in the petition, intervened separately, or filed a similar petition and whose position on the questions presented may fairly be presumed to be adverse to that of petitioner.
10. The petitioner requests the department to determine whether a statute is unconstitutional on its face.
11. The petition relates to any criminal investigation.
12. The petition concerns any procedure or practice of the department or any other agency related to initiation or conduct of criminal investigations or referral of matters for possible criminal investigation or prosecution.

**10.109(2)** A refusal to issue a declaratory order shall indicate the specific grounds for the refusal, unless it pertains to a matter under criminal investigation, or which has been referred for possible criminal

prosecution, in which event no information which might compromise the investigation or prosecution shall be released to the petitioner or any intervenor. A refusal to issue a declaratory order constitutes final agency action on the petition.

**10.109(3)** Refusal to issue a declaratory order pursuant to this provision does not preclude the filing of a new petition that seeks to eliminate the grounds for the refusal to issue an order.

**661—10.110(17A) Contents of declaratory order—effective date.** In addition to the order itself, a declaratory order must contain the date of its issuance, the name of petitioner and all intervenors, the specific statutes, rules, policies, decisions, or orders involved, the particular facts upon which it is based, and the reasons for its conclusion.

A declaratory order is effective on the date of issuance.

**661—10.111(17A) Copies of orders.** A copy of all orders issued in response to a petition for a declaratory order shall be mailed promptly to each original petitioner and to each intervenor.

**661—10.112(17A) Effect of a declaratory order.** A declaratory order has the same status and binding effect as a final order issued in a contested case proceeding. It is binding on the department, the petitioner, and any intervenors who consent to be bound and is applicable only in circumstances where the relevant facts and the law involved are indistinguishable from those on which the order was based. As to all other persons, a declaratory order serves only as precedent and is not binding on the department. The issuance of a declaratory order constitutes final agency action on the petition.

**661—10.113** to **10.200** Reserved.

AGENCY PROCEDURE FOR RULE MAKING

**661—10.201(17A) Applicability.** Except to the extent otherwise expressly provided by statute, all rules adopted by the department are subject to the provisions of Iowa Code chapter 17A, the Iowa administrative procedure Act, and the provisions of this chapter.

**661—10.202(17A) Advice on possible rules before notice of proposed rule adoption.** In addition to seeking information by other methods, the department may, before publication of a Notice of Intended Action under Iowa Code section 17A.4(1)*"a,"* solicit comments from the public on a subject matter of possible rule making by the department by causing notice to be published in the Iowa Administrative Bulletin of the subject matter and indicating where, when, and how persons may comment.

**661—10.203(17A) Public rule-making docket.**

**10.203(1)** *Docket maintained.* The department shall maintain a current public rule-making docket.

**10.203(2)** *Anticipated rule making.* The rule-making docket shall list each anticipated rule-making proceeding. A rule-making proceeding is deemed "anticipated" from the time a draft of proposed rules is distributed for internal discussion within the department, with the approval of the commissioner of public safety. For each anticipated rule-making proceeding the docket shall contain a listing of the precise subject matter which may be submitted for consideration by the rule-making authority for subsequent proposal under the provisions of Iowa Code section 17A.4(1)*"a,"* the name and address of department personnel with whom persons may communicate with respect to the matter, and an indication of the present status within the department of that possible rule. The department may also include in the docket other subjects upon which public comment is desired.

**10.203(3)** *Pending rule-making proceedings.* The rule-making docket shall list each pending rule-making proceeding. A rule-making proceeding is pending from the time it is commenced, by publication in the Iowa Administrative Bulletin of a Notice of Intended Action pursuant to Iowa Code section 17A.4(1)*"a,"* to the time it is terminated, by publication of a Notice of Termination in the Iowa Administrative Bulletin or the rule becoming effective. For each rule-making proceeding, the docket shall indicate:

*a.* The subject matter of the proposed rule;

*b.* A citation to all published notices relating to the proceeding;

*c.* Where written submissions on the proposed rule may be inspected;

*d.* The time during which written submissions may be made;

*e.* The names of persons who have made written requests for an opportunity to make oral presentations on the proposed rule, where those requests may be inspected, and where and when oral presentations may be made;

*f.* Whether a written request for the issuance of a regulatory analysis, or a concise statement of reasons, has been filed, whether such an analysis or statement or a fiscal impact statement has been issued, and where any such written request, analysis, or statement may be inspected;

*g.* The current status of the proposed rule and any department determinations with respect thereto;

*h.* Any known timetable for department decisions or other action in the proceeding;

*i.* The date of the rule's adoption;

*j.* The date of the rule's filing, indexing, and publication;

*k.* The date on which the rule will become effective; and

*l.* Where the rule-making record may be inspected.

**661—10.204(17A) Notice of proposed rule making.**

**10.204(1)** *Contents.* At least 35 days before the adoption of a rule the department shall cause Notice of Intended Action to be published in the Iowa Administrative Bulletin. The Notice of Intended Action shall include:

*a.* A brief explanation of the purpose of the proposed rule;

*b.* The specific legal authority for the proposed rule;

*c.* Except to the extent impracticable, the text of the proposed rule;

*d.* Where, when, and how persons may present their views on the proposed rule; and

*e.* Where, when, and how persons may demand an oral proceeding on the proposed rule if the notice does not already provide for one.

Where inclusion of the complete text of a proposed rule in the Notice of Intended Action is impracticable, the department shall include in the notice a statement fully describing the specific subject matter of the omitted portion of the text of the proposed rule, the specific issues to be addressed by that omitted text of the proposed rule, and the range of possible choices being considered by the department for the resolution of each of those issues.

**10.204(2)** *Incorporation by reference.* A proposed rule may incorporate other materials by reference only if it complies with all of the requirements applicable to the incorporation by reference of other materials in an adopted rule that are contained in subrule 10.212(2) of this chapter.

**10.204(3)** *Copies of notices.* Persons desiring to receive copies of future Notices of Intended Action by subscription must file with the Plans and Research Bureau, Department of Public Safety, Wallace State Office Building, Des Moines, Iowa 50319, a written request indicating the name and address to which such notices should be sent. Within seven days after submission of a Notice of Intended Action to the administrative rules coordinator for publication in the Iowa Administrative Bulletin, the department shall mail or electronically transmit a copy of that notice to subscribers who have filed a written request for either mailing or electronic transmittal with the department for Notices of Intended Action. The written request shall be accompanied by payment of the subscription price which may cover the full cost of the subscription service, including its administrative overhead and the cost of copying and mailing the Notices of Intended Action for a period of one year. The price for such a subscription can be obtained from the Plans and Research Bureau, Department of Public Safety, at the address above, by telephone at (515)281-5042, or by electronic mail via the Internet at admrule@dps.state.ia.us.

**661—10.205(17A) Public participation.**

**10.205(1)** *Written comments.* For at least 20 days after publication of the Notice of Intended Action, persons may submit argument, data, and views, in writing, on the proposed rule. Such written submissions should identify the proposed rule to which they relate and should be submitted to the Plans

and Research Bureau, Department of Public Safety, Wallace State Office Building, Des Moines, Iowa 50319, or the person or office designated in the Notice of Intended Action.

**10.205(2)** *Oral proceedings.* The department may, at any time, schedule an oral proceeding on a proposed rule. The department shall schedule an oral proceeding on a proposed rule if, within 20 days after the published Notice of Intended Action, a written request for an opportunity to make oral presentations is submitted to the department by the administrative rules review committee, a governmental subdivision, an agency, an association having not less than 25 members, or at least 25 persons. That request must also contain the following additional information:

1. A request by one or more individual persons must be signed by each of them and include the address and telephone number of each of them.

2. A request by an association must be signed by an officer or designee of the association and must contain a statement that the association has at least 25 members and the address and telephone number of the person signing that request.

3. A request by an agency or governmental subdivision must be signed by an official having authority to act on behalf of the entity and must contain the address and telephone number of the person signing that request.

**10.205(3)** *Conduct of oral proceedings.*

*a. Applicability.* This subrule applies only to those oral rule-making proceedings in which an opportunity to make oral presentations is authorized or required by Iowa Code section 17A.4(1)*"b"* as amended by 1998 Iowa Acts, chapter 1202, section 8, or this chapter.

*b. Scheduling and notice.* An oral proceeding on a proposed rule may be held in one or more locations and shall not be held earlier than 20 days after notice of its location and time is published in the Iowa Administrative Bulletin. That notice shall also identify the proposed rule by ARC number and citation to the Iowa Administrative Bulletin.

*c. Presiding officer.* The commissioner of public safety or the commissioner's designee shall preside at the oral proceeding on a proposed rule. If the commissioner does not preside, the presiding officer shall prepare a memorandum for consideration by the department summarizing the contents of the presentations made at the oral proceeding unless the commissioner determines that such a memorandum is unnecessary. If the oral proceeding relates to rule making which falls within the authority of an official other than the commissioner, the oral proceeding shall be presided over by the official with rule-making authority or that official's designee.

*d. Conduct of proceeding.* At an oral proceeding on a proposed rule, persons may make oral statements and make documentary and physical submissions, which may include data, views, comments or arguments concerning the proposed rule. Persons wishing to make oral presentations at such a proceeding are encouraged to notify the agency at least one business day prior to the proceeding and indicate the general subject of their presentations. At the proceeding, those who participate shall indicate their names and addresses, identify any persons or organizations they may represent, and provide any other information relating to their participation deemed appropriate by the presiding officer. Oral proceedings shall be open to the public and shall be recorded by stenographic or electronic means.

(1) At the beginning of the oral proceeding, the presiding officer shall give a brief synopsis of the proposed rule, a statement of the statutory authority for the proposed rule, and the reasons for the agency decision to propose the rule. The presiding officer may place time limitations on individual oral presentations when necessary to ensure the orderly and expeditious conduct of the oral proceeding. To encourage joint oral presentations and to avoid repetition, additional time may be provided for persons whose presentations represent the views of other individuals as well as their own views.

(2) Persons making oral presentations are encouraged to summarize matters which have already been submitted in writing.

(3) The presiding officer shall have the authority to take any reasonable action necessary for the orderly conduct of the meeting.

(4) Physical and documentary submissions presented by participants in the oral proceeding shall be submitted to the presiding officer. Such submissions become the property of the agency.

(5) The oral proceeding may be continued by the presiding officer to a later time without notice other than by announcement at the hearing.

(6) Participants in an oral proceeding shall not be required to take an oath or to submit to cross-examination. However, the presiding officer in an oral proceeding may question participants and permit the questioning of participants by other representatives of the department who may be present about any matter relating to that rule-making proceeding, including any prior written submissions made by those participants in that proceeding; but no participant shall be required to answer any question.

(7) The presiding officer in an oral proceeding may permit rebuttal statements and request the filing of written statements subsequent to the adjournment of the oral presentations.

**10.205(4)** *Additional information.* In addition to receiving written comments and oral presentations on a proposed rule according to the provisions of this rule, the department may obtain information concerning a proposed rule through any other lawful means deemed appropriate under the circumstances.

**10.205(5)** *Accessibility.* The department shall schedule oral proceedings in rooms accessible to and functional for persons with physical disabilities. Persons who have special requirements should contact the Plans and Research Bureau, Department of Public Safety, Wallace State Office Building, Des Moines, Iowa 50319, in advance to arrange access or other needed services.

**661—10.206(17A) Regulatory analysis.**

**10.206(1)** *Definition of small business.* A "small business" is defined in 1998 Iowa Acts, chapter 1202, section 10(7).

**10.206(2)** *Mailing list.* Small businesses or organizations of small businesses may be registered on the department's small business impact list by making a written application addressed to Plans and Research Bureau, Department of Public Safety, Wallace State Office Building, Des Moines, Iowa 50319. The application for registration shall state:

*a.* The name of the small business or organization of small businesses;

*b.* Its address;

*c.* The name of a person authorized to transact business for the applicant;

*d.* A description of the applicant's business or organization. An organization representing 25 or more persons who qualify as a small business shall indicate that fact.

*e.* Whether the registrant desires copies of Notices of Intended Action at cost, or desires advance notice of the subject of all or some specific category of proposed rule making affecting small business.

The department may at any time request additional information from the applicant to determine whether the applicant is qualified as a small business or as an organization of 25 or more small businesses. The department may periodically send a letter to each registered small business or organization of small businesses asking whether that business or organization wishes to remain on the registration list. The name of a small business or organization of small businesses will be removed from the list if a negative response is received, or if no response is received within 30 days after the letter is sent.

**10.206(3)** *Time of mailing.* Within seven days after submission of a Notice of Intended Action to the administrative rules coordinator for publication in the Iowa Administrative Bulletin, the department shall mail to all registered small businesses or organizations of small businesses, in accordance with their request, either a copy of the Notice of Intended Action or notice of the subject of that proposed rule making. In the case of a rule that may have an impact on small business adopted in reliance upon Iowa Code section 17A.4(2), the department shall mail notice of the adopted rule to registered businesses or organizations prior to the time the adopted rule is published in the Iowa Administrative Bulletin.

**10.206(4)** *Qualified requesters for regulatory analysis—economic impact.* The department shall issue a regulatory analysis of a proposed rule that conforms to the requirements of 1998 Iowa Acts, chapter 1202, section 10(2a), after a proper request from:

*a.* The administrative rules coordinator;

*b.* The administrative rules review committee.

**10.206(5)** *Qualified requesters for regulatory analysis— business impact.* The department shall issue a regulatory analysis of a proposed rule that conforms to the requirements of 1998 Iowa Acts, chapter 1202, section 10(2b), after a proper request from:

*a.* The administrative rules review committee;

*b.* The administrative rules coordinator;

*c.* At least 25 or more persons who sign the request provided that each represents a different small business;

*d.* An organization representing at least 25 small businesses. That organization shall list the name, address and telephone number of not less than 25 small businesses it represents.

**10.206(6)** *Time period for analysis.* Upon receipt of a timely request for a regulatory analysis, the department shall adhere to the time lines described in 1998 Iowa Acts, chapter 1202, section 10(4).

**10.206(7)** *Contents of request.* A request for a regulatory analysis is made when it is mailed or delivered to the Plans and Research Bureau, Department of Public Safety, Wallace State Office Building, Des Moines, Iowa 50319. The request shall be in writing and satisfy the requirements of 1998 Iowa Acts, chapter 1202, section 10(1).

**10.206(8)** *Contents of concise summary.* The contents of the concise summary shall conform to the requirements of 1998 Iowa Acts, chapter 1202, section 10(4,5).

**10.206(9)** *Publication of a concise summary.* The department shall make available, to the maximum extent feasible, copies of the published summary in conformance with 1998 Iowa Acts, chapter 1202, section 10(5).

**10.206(10)** *Regulatory analysis contents—rules review committee or rules coordinator.* When a regulatory analysis is issued in response to a written request from the administrative rules review committee or the administrative rules coordinator, the regulatory analysis shall conform to the requirements of 1998 Iowa Acts, chapter 1202, section 10(2a), unless a written request expressly waives one or more of the items listed in the section.

**10.206(11)** *Regulatory analysis contents—substantial impact on small business.* When a regulatory analysis is issued in response to a written request from the administrative rules review committee, the administrative rules coordinator, at least 25 persons signing that request who each qualify as a small business or by an organization representing at least 25 small businesses, the regulatory analysis shall conform to the requirements of 1998 Iowa Acts, chapter 1202, section 10(2b).

**661—10.207(17A,25B) Fiscal impact statement.**

**10.207(1)** A proposed rule that mandates additional combined expenditures exceeding $100,000 by all affected political subdivisions or agencies and entities which contract with political subdivisions to provide services must be accompanied by a fiscal impact statement outlining the costs associated with the rule. A fiscal impact statement must satisfy the requirements of Iowa Code section 25B.6.

**10.207(2)** If the department determines at the time it adopts a rule that the fiscal impact statement upon which the rule is based contains errors, the department shall, at the same time, issue a corrected fiscal impact statement and publish the corrected fiscal impact statement in the Iowa Administrative Bulletin.

**661—10.208(17A) Time and manner of rule adoption.**

**10.208(1)** *Time of adoption.* The department shall not adopt a rule until the period for making written submissions and oral presentations has expired. Within 180 days after the later of the publication of the Notice of Intended Action, or the end of oral proceedings thereon, the department shall adopt a rule pursuant to the rule-making proceeding or terminate the proceeding by publication of a notice to that effect in the Iowa Administrative Bulletin.

**10.208(2)** *Consideration of public comment.* Before the adoption of a rule, the department shall consider fully all of the written submissions and oral submissions received in that rule-making proceeding or any memorandum summarizing such oral submissions, and any regulatory analysis or fiscal impact statement issued in that rule-making proceeding.

**10.208(3)** *Reliance on department expertise.* Except as otherwise provided by law, the department may use its own experience, technical competence, specialized knowledge, and judgment in the adoption of a rule.

**661—10.209(17A) Variance between adopted rule and published notice of proposed rule adoption.**

**10.209(1)** The department shall not adopt a rule that differs from the rule proposed in the Notice of Intended Action on which the rule is based unless:

*a.* The differences are within the scope of the subject matter announced in the Notice of Intended Action and are in character with the issues raised in that notice; and

*b.* The differences are a logical outgrowth of the contents of that Notice of Intended Action and the comments submitted in response thereto; and

*c.* The Notice of Intended Action provided fair warning that the outcome of that rule-making proceeding could be the rule in question.

**10.209(2)** In determining whether the Notice of Intended Action provided fair warning that the outcome of that rule-making proceeding could be the rule in question, the department shall consider the following factors:

*a.* The extent to which persons who will be affected by the rule should have understood that the rule-making proceeding on which it is based could affect their interests;

*b.* The extent to which the subject matter of the rule or the issues determined by the rule are different from the subject matter or issues contained in the Notice of Intended Action; and

*c.* The extent to which the effects of the rule differ from the effects of the proposed rule contained in the Notice of Intended Action.

**10.209(3)** The department shall commence a rule-making proceeding within 60 days of its receipt of a petition for rule making seeking the amendment or repeal of a rule that differs from the proposed rule contained in the Notice of Intended Action upon which the rule is based, unless the department finds that the differences between the adopted rule and the proposed rule are so insubstantial as to make such a rule-making proceeding wholly unnecessary. A copy of any such finding and the petition to which it responds shall be sent to petitioner, the administrative rules coordinator, and the administrative rules review committee, within three days of its issuance.

**10.209(4)** Concurrent rule-making proceedings. Nothing in this rule disturbs the discretion of the department to initiate, concurrently, several different rule-making proceedings on the same subject with several different published Notices of Intended Action.

**661—10.210(17A) Exemptions from public rule-making procedures.**

**10.210(1)** *Omission of notice and comment.* To the extent the department for good cause finds that public notice and participation are unnecessary, impracticable, or contrary to the public interest in the process of adopting a particular rule, the department may adopt that rule without publishing advance Notice of Intended Action in the Iowa Administrative Bulletin and without providing for written or oral public submissions prior to its adoption. The department shall incorporate the required finding and a brief statement of its supporting reasons in each rule adopted in reliance upon this subrule.

**10.210(2)** Reserved.

**10.210(3)** *Public proceedings on rules adopted without them.* The department may, at any time, commence a standard rule-making proceeding for the adoption of a rule that is identical or similar to a rule it adopts in reliance upon subrule 10.210(1). Upon written petition by a governmental subdivision, the administrative rules review committee, the department, the administrative rules coordinator, an association having not less than 25 members, or at least 25 persons, the department shall commence a standard rule-making proceeding for any rule specified in the petition that was adopted in reliance upon subrule 10.210(1). Such a petition must be filed within one year of the publication of the specified rule in the Iowa Administrative Bulletin as an adopted rule. The rule-making proceeding on that rule must be commenced within 60 days of the receipt of such a petition. After a standard rule-making proceeding commenced pursuant to this subrule, the department may either readopt the rule it adopted without benefit of all usual procedures on the basis of subrule 10.210(1), or may take any other lawful action, including the amendment or repeal of the rule in question, with whatever further proceedings are appropriate.

**661—10.211(17A) Concise statement of reasons.**

**10.211(1)** *General.* When requested by a person, either prior to the adoption of a rule or within 30 days after its publication in the Iowa Administrative Bulletin as an adopted rule, the department shall issue a concise statement of reasons for the rule. Requests for such a statement must be in writing and be delivered to the Plans and Research Bureau, Department of Public Safety, Wallace State Office Building, Des Moines, Iowa 50319. The request should indicate whether the statement is sought for all or only a specified part of the rule. Requests will be considered made on the date received.

**10.211(2)** *Contents.* The concise statement of reasons shall contain:

*a.* The reasons for adopting the rule;

*b.* An indication of any change between the text of the proposed rule contained in the published Notice of Intended Action and the text of the rule as finally adopted, with the reasons for any such change;

*c.* The principal reasons urged in the rule-making proceeding for and against the rule, and the department's reasons for overruling the arguments made against the rule.

**10.211(3)** *Time of issuance.* After a proper request, the department shall issue a concise statement of reasons by the later of the time the rule is adopted or 35 days after receipt of the request.

**661—10.212(17A) Contents, style, and form of rule.**

**10.212(1)** *Contents.* Each rule adopted by the department shall contain the text of the rule and, in addition:

*a.* The date the department adopted the rule;

*b.* A brief explanation of the principal reasons for the rule-making action if such reasons are required by 1998 Iowa Acts, chapter 1202, section 8, or the department in its discretion decides to include such reasons;

*c.* A reference to all rules repealed, amended, or suspended by the rule;

*d.* A reference to the specific statutory or other authority authorizing adoption of the rule;

*e.* Any findings required by any provision of law as a prerequisite to adoption or effectiveness of the rule;

*f.* The effective date of the rule.

**10.212(2)** *Incorporation by reference.* The department may incorporate by reference in a proposed or adopted rule, and without causing publication of the incorporated matter in full, all or any part of a code, standard, rule, or other matter if the department finds that the incorporation of its text in the department proposed or adopted rule would be unduly cumbersome, expensive, or otherwise inexpedient. The reference in the department proposed or adopted rule shall fully and precisely identify the incorporated matter by location, title, citation, date, and edition, if any; shall briefly indicate the precise subject and the general contents of the incorporated matter; and shall state that the proposed or adopted rule does not include any later amendments or editions of the incorporated matter. The department may incorporate such matter by reference in a proposed or adopted rule only if the department makes copies of it readily available to the public. The rule shall state how and where copies of the incorporated matter may be obtained at cost from the department, and how and where copies may be obtained from the agency, organization, association, or persons originally issuing that matter. The department shall retain permanently a copy of any materials incorporated by reference in a rule of the department.

If the department adopts standards by reference to another publication, it shall provide a copy of the publication containing the standards to the administrative rules coordinator for deposit in the state law library and may make the standards available electronically.

**10.212(3)** *References to materials not published in full.* When the administrative code editor decides to omit the full text of a proposed or adopted rule because publication of the full text would be unduly cumbersome, expensive, or otherwise inexpedient, the department shall prepare and submit to the administrative code editor for inclusion in the Iowa Administrative Bulletin and Iowa Administrative Code a summary statement describing the specific subject matter of the omitted material. This summary statement shall include the title and a brief description sufficient to inform the public of the specific nature and subject matter of the proposed or adopted rules, and of significant issues involved in these

rules. The summary statement shall also describe how a copy of the full text of the proposed or adopted rule, including any unpublished matter and any matter incorporated by reference, may be obtained from the department. The department will provide a copy of that full text, at actual cost, upon request and shall make copies of the full text available for review at the state law library and may make the standards available electronically.

At the request of the administrative code editor, the department shall provide a proposed statement explaining why publication of the full text would be unduly cumbersome, expensive, or otherwise inexpedient.

**10.212(4)** *Style and form.* In preparing its rules, the department shall follow the uniform numbering system, form, and style prescribed by the administrative rules coordinator.

**661—10.213(17A) Agency rule-making record.**

**10.213(1)** *Requirement.* The department shall maintain an official rule-making record for each rule it proposes by publication in the Iowa Administrative Bulletin of a Notice of Intended Action, or adopts. The rule-making record and materials incorporated by reference must be available for public inspection.

**10.213(2)** *Contents.* The department rule-making record shall contain:

*a.* Copies of all publications in the Iowa Administrative Bulletin with respect to the rule or the proceeding upon which the rule is based and any file-stamped copies of department submissions to the administrative rules coordinator concerning that rule or the proceeding upon which it is based;

*b.* Copies of any portions of the department's public rule-making docket containing entries relating to the rule or the proceeding upon which the rule is based;

*c.* All written petitions, requests, and submissions received by the department, and all other written materials of a factual nature as distinguished from opinion that are relevant to the merits of the rule and that were created or compiled by the department and considered by the commissioner of public safety or other official with rule-making authority, in connection with the formulation, proposal, or adoption of the rule or the proceeding upon which the rule is based, except to the extent the department is authorized by law to keep them confidential; provided, however, that when any such materials are deleted because they are authorized by law to be kept confidential, the department shall identify in the record the particular materials deleted and state the reasons for that deletion;

*d.* Any official transcript of oral presentations made in the proceeding upon which the rule is based or, if not transcribed, the stenographic record or electronic recording of those presentations, and any memorandum prepared by a presiding officer summarizing the contents of those presentations;

*e.* A copy of any regulatory analysis or fiscal impact statement prepared for the proceeding upon which the rule is based;

*f.* A copy of the rule and any concise statement of reasons prepared for that rule;

*g.* All petitions for amendment or repeal or suspension of the rule;

*h.* A copy of any objection to the issuance of that rule without public notice and participation that was filed pursuant to Iowa Code section 17A.4(2) by the administrative rules review committee, the governor, or the attorney general;

*i.* A copy of any objection to the rule filed by the administrative rules review committee, the governor, or the attorney general pursuant to Iowa Code section 17A.4(4), and any department response to that objection;

*j.* A copy of any significant written criticism of the rule, including a summary of any petitions for waiver of the rule; and

*k.* A copy of any executive order concerning the rule.

**10.213(3)** *Effect of record.* Except as otherwise required by a provision of law, the department rule-making record required by this rule need not constitute the exclusive basis for department action on that rule.

**10.213(4)** *Maintenance of record.* The department shall maintain the rule-making record for a period of not less than five years from the later of the date the rule to which it pertains became effective, the date of the Notice of Intended Action, or the date of any written criticism as described in 10.213(2)*"g," "h," "i,"* or *"j."*

**661—10.214(17A) Filing of rules.** The department shall file each rule it adopts in the office of the administrative rules coordinator. The filing must be executed as soon after adoption of the rule as is practicable. At the time of filing, each rule must have attached to it any fiscal impact statement and any concise statement of reasons that was issued with respect to that rule. If a fiscal impact statement or statement of reasons for that rule was not issued until a time subsequent to the filing of that rule, the note or statement must be attached to the filed rule within five working days after the note or statement is issued. In filing a rule, the department shall use the standard form prescribed by the administrative rules coordinator.

**661—10.215(17A) Effectiveness of rules prior to publication.**

**10.215(1)** *Grounds.* The department may make a rule effective after its filing at any stated time prior to 35 days after its indexing and publication in the Iowa Administrative Bulletin if it finds that a statute so provides, the rule confers a benefit or removes a restriction on some segment of the public, or that the effective date of the rule is necessary to avoid imminent peril to the public health, safety, or welfare. The department shall incorporate the required finding and a brief statement of its supporting reasons in each rule adopted in reliance upon this subrule.

**10.215(2)** *Special notice.* When the department makes a rule effective prior to its indexing and publication in reliance upon the provisions of Iowa Code section 17A.5(2)*"b"*(3), the department shall employ all reasonable efforts to make its contents known to the persons who may be affected by that rule prior to the rule's indexing and publication. The term "all reasonable efforts" requires the department to employ the most effective and prompt means of notice rationally calculated to inform potentially affected parties of the effectiveness of the rule that is justified and practical under the circumstances considering the various alternatives available for this purpose, the comparative costs to the department of utilizing each of those alternatives, and the harm suffered by affected persons from any lack of notice concerning the contents of the rule prior to its indexing and publication. The means that may be used for providing notice of such rules prior to their indexing and publication include, but are not limited to, any one or more of the following means: radio, newspaper, television, signs, mail, telephone, personal notice or electronic means.

A rule made effective prior to its indexing and publication in reliance upon the provisions of Iowa Code section 17A.5(2)*"b"*(3) shall include in that rule a statement describing the reasonable efforts that will be used to comply with the requirements of subrule 10.215(2).

**661—10.216(17A) General statements of policy.**

**10.216(1)** *Compilation, indexing, public inspection.* The department shall maintain an official, current, and dated compilation that is indexed by subject, containing all of its general statements of policy within the scope of Iowa Code section 17A.2(10)*"a," "c," "f," "g," "h," "k."* Each addition to, change in, or deletion from the official compilation must also be dated, indexed, and a record thereof kept. Except for those portions containing rules governed by Iowa Code section 17A.2(7)*"f,"* or otherwise authorized by law to be kept confidential, the compilation must be made available for public inspection and copying.

**10.216(2)** *Enforcement of requirements.* A general statement of policy subject to the requirements of this subsection shall not be relied on by the department to the detriment of any person who does not have actual, timely knowledge of the contents of the statement until the requirements of subrule 10.216(1) are satisfied. This provision is inapplicable to the extent necessary to avoid imminent peril to the public health, safety, or welfare.

**661—10.217(17A) Review by department of rules.**

**10.217(1)** Any interested person, association, agency, or political subdivision may submit a written request to the administrative rules coordinator requesting the department to conduct a formal review of a specified rule. Upon approval of that request by the administrative rules coordinator, the department shall conduct a formal review of a specified rule to determine whether a new rule should be adopted instead or the rule should be amended or repealed. The department may refuse to conduct a review if

it has conducted such a review of the specified rule within five years prior to the filing of the written request.

**10.217(2)** In conducting the formal review, the department shall prepare within a reasonable time a written report summarizing its findings, its supporting reasons, and any proposed course of action. The report must include a concise statement of the department's findings regarding the rule's effectiveness in achieving its objectives, including a summary of any available supporting data. The report shall also concisely describe significant written criticisms of the rule received during the previous five years, including a summary of any petitions for waiver of the rule received by the department or granted by the department. The report shall describe alternative solutions to resolve the criticisms of the rule, the reasons any were rejected, and any changes made in the rule in response to the criticisms as well as the reasons for the changes. A copy of the department's report shall be sent to the administrative rules review committee and the administrative rules coordinator. The report must also be available for public inspection.

**661—10.218(17A) Petition for rule making.** Any person or agency may file a petition for rule making with the department at the Plans and Research Bureau, Department of Public Safety, Wallace State Office Building, Des Moines, Iowa 50319. A petition is deemed filed when it is received by that office. The agency must provide the petitioner with a file-stamped copy of the petition if the petitioner provides the agency an extra copy for this purpose. The petition must be typewritten or legibly handwritten in ink and must substantially conform to the following form:

DEPARTMENT OF PUBLIC SAFETY

| | | |
|---|---|---|
| Petition by (Name of Petitioner) for the<br>(adoption, amendment, or repeal)<br>of rules relating to (state subject matter). | } | PETITION FOR<br>RULE MAKING |

The petition must provide the following information:

1. A statement of the specific rule-making action sought by the petitioner including the text or a summary of the contents of the proposed rule or amendment to a rule and, if it is a petition to amend or repeal a rule, a citation and the relevant language to the particular portion or portions of the rule proposed to be amended or repealed.
2. A citation to any law deemed relevant to the agency's authority to take the action urged or to the desirability of that action.
3. A brief summary of petitioner's arguments in support of the action urged in the petition.
4. A brief summary of any data supporting the action urged in the petition.
5. The names and addresses of other persons, or a description of any class of persons, known by petitioner to be affected by or interested in, the proposed action which is the subject of the petition.
6. Any request by petitioner for a meeting provided for by subrule 10.221(1).

**10.218(1)** The petition must be dated and signed by the petitioner or the petitioner's representative. It must also include the name, mailing address, and telephone number of the petitioner and petitioner's representative, and a statement indicating the person to whom communications concerning the petition should be directed.

**10.218(2)** The department may deny a petition because it does not substantially conform to the required form.

**661—10.219(17A) Briefs.** The petitioner may attach a brief to the petition in support of the action urged in the petition. The department may request a brief from the petitioner or from any other person concerning the substance of the petition.

**661—10.220(17A) Inquiries.** Inquiries concerning the status of a petition for rule making may be made to the Administrative Rules Coordinator, Plans and Research Bureau, Department of Public Safety, Wallace State Office Building, Des Moines, Iowa 50319.

**661—10.221(17A) Agency consideration.**

**10.221(1)** Within 14 days after the filing of a petition, the department must submit a copy of the petition and any accompanying brief to the administrative rules coordinator and to the administrative rules review committee. Upon request by petitioner in the petition, the department may schedule a brief and informal meeting between the petitioner and the agency, a member of the agency, or a member of the staff of the agency, to discuss the petition. The department may request the petitioner to submit additional information or argument concerning the petition. The department may also solicit comments from any person on the substance of the petition. Also, comments on the substance of the petition may be submitted to the department by any person.

**10.221(2)** Within 60 days after the filing of the petition, or within any longer period agreed to by the petitioner, the department must, in writing, deny the petition, and notify petitioner of its action and the specific grounds for the denial, or grant the petition and notify petitioner that it has instituted rule-making proceedings on the subject of the petition. Petitioner shall be deemed notified of the denial or grant of the petition on the date when the agency mails or delivers the required notification to petitioner.

**10.221(3)** Denial of a petition because it does not substantially conform to the required form does not preclude the filing of a new petition on the same subject that seeks to eliminate the grounds for the agency's rejection of the petition.

**661—10.222(17A) Waivers of rules.** This rule outlines generally applicable standards and a uniform process for the granting of individual waivers from rules adopted by the department of public safety in situations where no other more specific procedure provides for waivers. To the extent another more specific provision of law governs the issuance of a waiver from a particular rule, the more specific provision shall supersede this rule with respect to any waiver from that rule. Generally, more specific procedures exist for considering waivers from rules of the state fire marshal and from provisions of the state of Iowa building code.

**10.222(1)** Applicability of rule. The department may grant a waiver from a rule only if the department has jurisdiction over the rule and the requested waiver is consistent with applicable statutes, constitutional provisions, or other provisions of law. The department may not waive requirements created or duties imposed by statute.

**10.222(2)** Criteria for waiver or variance. In response to a petition completed pursuant to this rule, the department may, in its sole discretion, issue an order waiving, in whole or in part, the requirements of a rule if the department finds, based on clear and convincing evidence, all of the following:

*a.* The application of the rule would impose an undue hardship on the person for whom the waiver is requested;

*b.* The waiver from the requirements of the rule in the specific case would not prejudice the substantial legal rights of any person;

*c.* The provisions of the rule subject to the petition for a waiver are not specifically mandated by statute or another provision of law; and

*d.* Substantially equal protection of public health, safety, and welfare will be afforded by a means other than that prescribed in the particular rule for which the waiver is requested.

**10.222(3)** Filing of petition. A petition for a waiver must be submitted in writing to the department as follows:

*a.* *License application.* If the petition relates to a license application, the petition shall be made in accordance with the filing requirements for the license in question.

*b.* *Contested cases.* If the petition relates to a pending contested case, the petition shall be filed in the contested case proceeding, using the caption of the contested case.

*c.* *Other.* If the petition does not relate to a license application or a pending contested case, the petition may be submitted with a caption containing the name of the entity or person for whom the waiver is requested.

*d.* *File petition.* A petition is deemed filed when it is received in the department's office. A petition should be sent to the Iowa Department of Public Safety, Attention: Agency Rules Administrator, Wallace State Office Building, East 9th and Grand, Des Moines, Iowa 50319-0040.

**10.222(4)** Content of petition. A petition for waiver shall include the following information where applicable and known to the requester:

*a.* The name, address, and telephone number of the entity or person for whom a waiver is being requested; the case number of or other reference to any related contested case; and the name, address, and telephone number of the petitioner's legal representative, if any.

*b.* A description of and citation to the specific rule from which a waiver is requested.

*c.* The specific waiver requested, including the precise scope and duration.

*d.* The relevant facts that the petitioner believes would justify a waiver under each of the four criteria described in subrule 10.222(2). This statement shall include a signed statement from the petitioner attesting to the accuracy of the facts provided in the petition, and a statement of reasons that the petitioner believes will justify a waiver.

*e.* A history of any prior contacts between the department, other departments or agencies of the state of Iowa, or political subdivisions and the petitioner relating to the regulated activity or license affected by the proposed waiver, including a description of each affected license or certificate held by the requester, any formal charges filed, notices of violation, contested case hearings, or investigations relating to the regulated activity or license within the last five years.

*f.* Any information known to the requester regarding the department's action in similar cases.

*g.* The name, address, and telephone number of any public agency or political subdivision which also regulates the activity in question or which might be affected by the granting of a waiver.

*h.* The name, address, and telephone number of any entity or person who would be adversely affected by the granting of a petition.

*i.* The name, address, and telephone number of any person with knowledge of the relevant facts relating to the proposed waiver.

*j.* Signed releases of information authorizing persons with knowledge regarding the request to furnish the department with information relevant to the waiver.

**10.222(5)** Additional information. Prior to issuing an order granting or denying a waiver, the department may request additional information from the petitioner relative to the petition and surrounding circumstances. If the petition was not filed in a contested case, the department may, on its own motion or at the petitioner's request, schedule a telephonic or in-person meeting between the petitioner and a representative or representatives of the department related to the waiver request.

**10.222(6)** Notice. The department shall acknowledge a petition upon receipt. The department shall ensure that, within 30 days of the receipt of the petition, notice of the pending petition and a concise summary of its contents have been provided to all persons to whom notice is required by any provision of law, including the petitioner. In addition, the department may give notice to other persons. To accomplish this notice provision, the department may require the petitioner to serve the notice on all persons to whom notice is required by any provision of law, and provide a written statement to the department attesting that notice has been provided.

**10.222(7)** Hearing procedures. The provisions of Iowa Code sections 17A.10 to 17A.18A regarding contested case hearings shall apply to any petition for a waiver filed within a contested case, and shall otherwise apply to department proceedings for a waiver only when the department so provides by rule or order or is required to do so by statute.

**10.222(8)** Ruling. An order granting or denying a waiver shall be in writing and shall contain a reference to the particular person or legal entity and rule or portion thereof to which the order pertains, a statement of the relevant facts and reasons upon which the action is based, and a description of the precise scope and duration of the waiver if one is issued.

*a. Departmental discretion.* The final decision on whether the circumstances justify the granting of a waiver shall be made at the sole discretion of the department, upon consideration of all relevant factors. Each petition for a waiver shall be evaluated by the department based on the unique, individual circumstances set out in the petition.

*b. Burden of persuasion.* The burden of persuasion rests with the petitioner to demonstrate by clear and convincing evidence that the department should exercise its discretion to grant a waiver from a rule.

*c.* *Narrowly tailored.* A waiver, if granted, shall provide the narrowest exception possible to the provisions of a rule.

*d.* *Administrative deadlines.* When the rule from which a waiver is sought establishes administrative deadlines, the department shall balance the special individual circumstances of the petitioner with the overall goal of uniform treatment of all similarly situated persons.

*e.* *Conditions.* The department may place on a waiver any condition that the department finds desirable to protect the public health, safety, and welfare.

*f.* *Time period of waiver.* A waiver shall not be permanent unless the petitioner can show that a temporary waiver would be impracticable. If a temporary waiver is granted, there is no automatic right to renewal. At the sole discretion of the department, a waiver may be renewed if the department finds that grounds for a waiver continue to exist.

*g.* *Time for ruling.* The department shall grant or deny a petition for a waiver as soon as practicable but, in any event, shall do so within 120 days of its receipt, unless the petitioner agrees to a later date. However, if a petition is filed in a contested case, the department shall grant or deny the petition no later than the time at which the final decision in that contested case is issued.

*h.* *When deemed denied.* Failure of the department to grant or deny a petition within the required time period shall be deemed a denial of that petition by the department. However, the department shall remain responsible for issuing an order denying a waiver.

*i.* *Service of order.* Within seven days of its issuance, any order issued under this rule shall be transmitted or delivered to the petitioner or the person to whom the order pertains, and to any other person entitled to such notice by any provision of law.

**10.222(9)** All orders granting or denying a waiver petition shall be indexed, filed, and available for public inspection as provided in Iowa Code section 17A.3. Petitions for a waiver and orders granting or denying a waiver petition are public records under Iowa Code chapter 22. Some petitions or orders may contain information the department is authorized or required to keep confidential. The department may accordingly redact confidential information from petitions or orders prior to public inspection.

**10.222(10)** Summary reports. Semiannually, the department shall prepare a summary report identifying the rules for which a waiver has been granted or denied, the number of times a waiver was granted or denied for each rule, a citation to the statutory provisions implemented by these rules, and a general summary of the reasons justifying the department's actions on waiver requests. If practicable, the report shall detail the extent to which the granting of a waiver has affected the general applicability of the rule itself. Copies of this report shall be available for public inspection and shall be provided semiannually to the administrative rules coordinator and the administrative rules review committee.

**10.222(11)** Cancellation of a waiver. A waiver issued by the department pursuant to this chapter may be withdrawn, canceled, or modified if, after appropriate notice and hearing, the department issues an order finding any of the following:

*a.* The petitioner or the person who was the subject of the waiver order withheld or misrepresented material facts relevant to the propriety or desirability of the waiver; or

*b.* The alternative means for ensuring that the public health, safety and welfare will be adequately protected after issuance of the waiver order have been demonstrated to be insufficient; or

*c.* The subject of the waiver order has failed to comply with all conditions contained in the order.

**10.222(12)** Violations. Violation of a condition in a waiver order shall be treated as a violation of the particular rule for which the waiver was granted. As a result, the recipient of a waiver under this chapter who violates a condition of the waiver may be subject to the same remedies or penalties as a person who violates the rule at issue.

**10.222(13)** Defense. After the department issues an order granting a waiver, the order is a defense within its terms and the specific facts indicated therein only for the person to whom the order pertains in any proceeding in which the rule in question is sought to be invoked.

**10.222(14)** Judicial review. Judicial review of the department's decision to grant or deny a waiver petition may be taken in accordance with Iowa Code chapter 17A.

**10.222(15)** Sample petition for waiver. A petition for waiver filed in accordance with this chapter must meet the requirements specified herein and must substantially conform to the following form:

BEFORE THE IOWA DEPARTMENT OF PUBLIC SAFETY

| | | |
|---|---|---|
| Petition by (name of petitioner) for the waiver/variance of (insert rule citation) relating to (insert the subject matter). | } | PETITION FOR WAIVER/VARIANCE |

1. Provide the name, address, and telephone number of the petitioner (person asking for a waiver or variance). Also provide the name, address, and telephone number of the petitioner's legal representative, if applicable, and a statement indicating the person to whom communications concerning the petition should be directed.

2. Describe and cite the specific rule from which a waiver is requested.

3. Describe the specific waiver requested, including the precise scope and time period for which the waiver will extend.

4. Explain the relevant facts and reasons that the petitioner believes justify a waiver. Include in the answer all of the following:

- Why applying the rule would result in undue hardship to the petitioner;
- Why waiving the rule would not prejudice the substantial legal rights of any person;
- Whether the provisions of the rule subject to the waiver are specifically mandated by statute or another provision of law; and
- How substantially equal protection of public health, safety, and welfare will be afforded by a means other than that prescribed in the particular rule for which the waiver is requested.

5. Provide a history of any prior contacts between the department, other departments or agencies of the state of Iowa, or political subdivisions and petitioner relating to the regulated activity or license that would be affected by the waiver. Include a description of each affected license held by the petitioner, any formal charges filed, any notices of violation, any contested case hearings held, or any investigations related to the regulated activity, license, registration, certification, or permit.

6. Provide information known to the petitioner regarding the department's action in similar cases.

7. Provide the name, address, and telephone number of any public agency or political subdivision that also regulates the activity in question or that might be affected by the granting of the petition.

8. Provide the name, address, and telephone number of any person or entity that would be adversely affected by the granting of the waiver or variance.

9. Provide the name, address, and telephone number of any person with knowledge of the relevant facts relating to the proposed waiver.

10. Provide signed releases of information authorizing persons with knowledge regarding the request to furnish the department with information relevant to the waiver.

I hereby attest to the accuracy and truthfulness of the above information.

| | |
|---|---|
| Petitioner's signature | Date |

This rule is intended to implement Iowa Code section 17A.22.

**661—10.223** to **10.300** Reserved.

CONTESTED CASES

**661—10.301(17A) Scope and applicability.** Rules 661—10.301(17A) to 10.332(17A) apply to contested case proceedings conducted by the department.

**661—10.302(17A) Definitions.** Except where otherwise specifically defined by law:

*"Contested case"* means a proceeding defined by Iowa Code section 17A.2(5) and includes any matter defined as a no factual dispute contested case under 1998 Iowa Acts, chapter 1202, section 14.

*"Issuance"* means the date of mailing of a decision or order or date of delivery if service is by other means unless another date is specified in the order.

*"Party"* means each person or agency named or admitted as a party or properly seeking and entitled as of right to be admitted as a party.

*"Presiding officer"* means the commissioner of public safety or other person designated by the commissioner to preside over a contested case proceeding.

*"Proposed decision"* means the presiding officer's recommended findings of fact, conclusions of law, decision, and order in a contested case in which the commissioner of public safety did not preside.

**661—10.303(17A) Time requirements.**

**10.303(1)** Time shall be computed as provided in Iowa Code subsection 4.1(34).

**10.303(2)** For good cause, the presiding officer may extend or shorten the time to take any action, except as precluded by statute or by other provision of law. Except for good cause stated in the record, before extending or shortening the time to take any action, the presiding officer shall afford all parties an opportunity to be heard or to file written arguments.

**661—10.304(17A) Requests for contested case proceeding.** Any person claiming an entitlement to a contested case proceeding shall file a written request for such a proceeding within the time specified by the particular rules or statutes governing the subject matter or, in the absence of such law, the time specified in the agency action in question.

The request for a contested case proceeding should state the name and address of the requester, identify the specific agency action which is disputed, and where the requester is represented by a lawyer identify the provisions of law or precedent requiring or authorizing the holding of a contested case proceeding in the particular circumstances involved, and include a short and plain statement of the issues of material fact in dispute.

Requests for contested case proceedings shall be filed with the Administrative Services Division, Department of Public Safety, Wallace State Office Building, Des Moines, Iowa 50319.

**661—10.305(17A) Notice of hearing.**

**10.305(1)** *Delivery.* Delivery of the notice of hearing constitutes the commencement of the contested case proceeding. Delivery may be executed by:

*a.* Personal service as provided in the Iowa Rules of Civil Procedure; or

*b.* Certified mail, return receipt requested; or

*c.* First-class mail; or

*d.* Publication, as provided in the Iowa Rules of Civil Procedure.

**10.305(2)** *Contents.* The notice of hearing shall contain the following information:

*a.* A statement of the time, place, and nature of the hearing;

*b.* A statement of the legal authority and jurisdiction under which the hearing is to be held;

*c.* A reference to the particular sections of the statutes and rules involved;

*d.* A short and plain statement of the matters asserted. If the department or other party is unable to state the matters in detail at the time the notice is served, the initial notice may be limited to a statement of the issues involved. Thereafter, upon application, a more definite and detailed statement shall be furnished;

*e.* Identification of all parties including the name, address and telephone number of the person who will act as advocate for the department or the state and of parties' counsel where known;

*f.* Reference to the procedural rules governing conduct of the contested case proceeding;

*g.* Reference to the procedural rules governing informal settlement;

*h.* Identification of the presiding officer, if known. If not known, a description of who will serve as presiding officer; and

*i.* Notification of the time period in which a party may request, pursuant to 1998 Iowa Acts, chapter 1202, section 15(1), and rule 10.306(17A), that the presiding officer be an administrative law judge.

**661—10.306(17A) Presiding officer.**

**10.306(1)** Any party who wishes to request that the presiding officer assigned to render a proposed decision be an administrative law judge employed by the department of inspections and appeals must file a written request within 20 days after service of a notice of hearing which identifies or describes the presiding officer as the agency head.

**10.306(2)** The commissioner of public safety or the commissioner's designee may deny the request only upon a finding that one or more of the following apply:

*a.* Neither the department nor any officer of the agency under whose authority the contested case is to take place is a named party to the proceeding or a real party in interest to that proceeding.

*b.* There is a compelling need to expedite issuance of a final decision in order to protect the public health, safety, or welfare.

*c.* An administrative law judge is unavailable to hear the case within a reasonable time.

*d.* The case involves significant policy issues of first impression that are inextricably intertwined with the factual issues presented.

*e.* The demeanor of the witnesses is likely to be dispositive in resolving the disputed factual issues.

*f.* Funds are unavailable to pay the costs of an administrative law judge and an interagency appeal.

*g.* The request was not timely filed.

*h.* The request is not consistent with a specified statute.

**10.306(3)** The commissioner or the commissioner's designee shall issue a written ruling specifying the grounds for its decision within 20 days after a request for an administrative law judge is filed. If the ruling is contingent upon the availability of an administrative law judge with the qualifications identified in subrule 10.306(4), the parties shall be notified at least 10 days prior to hearing if a qualified administrative law judge will not be available.

**10.306(4)** Reserved.

**10.306(5)** Except as provided otherwise by another provision of law, all rulings by an administrative law judge acting as presiding officer are subject to appeal to the agency. A party must seek any available intra-agency appeal in order to exhaust adequate administrative remedies.

**10.306(6)** Unless otherwise provided by law, the commissioner, when reviewing a proposed decision upon intra-agency appeal, shall have the powers of and shall comply with the provisions of this chapter which apply to presiding officers.

**661—10.307(17A) Waiver of procedures.** Unless otherwise precluded by law, the parties in a contested case proceeding may waive any provision of this chapter. However, the department in its discretion may refuse to give effect to such a waiver when it deems the waiver to be inconsistent with the public interest.

**661—10.308(17A) Telephone proceedings.** The presiding officer may resolve preliminary procedural motions by telephone conference in which all parties have an opportunity to participate. Other telephone proceedings may be held with the consent of all parties. The presiding officer will determine the location of the parties and witnesses for telephone hearings. The convenience of the witnesses or parties, as well as the nature of the case, will be considered when location is chosen.

**661—10.309(17A) Disqualification.**

**10.309(1)** A presiding officer or other person shall withdraw from participation in the making of any proposed or final decision in a contested case if that person:

*a.* Has a personal bias or prejudice concerning a party or a representative of a party;

*b.* Has personally investigated, prosecuted or advocated in connection with that case, the specific controversy underlying that case, another pending factually related contested case, or a pending factually related controversy that may culminate in a contested case involving the same parties;

*c.* Is subject to the authority, direction or discretion of any person who has personally investigated, prosecuted or advocated in connection with that contested case, the specific controversy underlying that contested case, or a pending factually related contested case or controversy involving the same parties;

*d.* Has acted as counsel to any person who is a private party to that proceeding within the past two years;

*e.* Has a personal financial interest in the outcome of the case or any other significant personal interest that could be substantially affected by the outcome of the case;

*f.* Has a spouse or relative within the third degree of relationship that: (1) is a party to the case, or an officer, director or trustee of a party; (2) is a lawyer in the case; (3) is known to have an interest that could be substantially affected by the outcome of the case; or (4) is likely to be a material witness in the case; or

*g.* Has any other legally sufficient cause to withdraw from participation in the decision making in that case.

**10.309(2)** The term "personally investigated" means taking affirmative steps to interview witnesses directly or to obtain documents or other information directly. The term "personally investigated" does not include general direction and supervision of assigned investigators, unsolicited receipt of information which is relayed to assigned investigators, review of another person's investigative work product in the course of determining whether there is probable cause to initiate a proceeding, or exposure to factual information while performing other agency functions, including fact gathering for purposes other than investigation of the matter which culminates in a contested case. Factual information relevant to the merits of a contested case received by a person who later serves as presiding officer in that case shall be disclosed if required by Iowa Code section 17A.17 as amended by 1998 Iowa Acts, chapter 1202, section 19, and subrules 10.309(3) and 10.323(9).

**10.309(3)** In a situation where a presiding officer or other person knows of information which might reasonably be deemed to be a basis for disqualification and decides voluntary withdrawal is unnecessary, that person shall submit the relevant information for the record by affidavit and shall provide for the record a statement of the reasons for the determination that withdrawal is unnecessary.

**10.309(4)** If a party asserts disqualification on any appropriate ground, including those listed in subrule 10.309(1), the party shall file a motion supported by an affidavit pursuant to 1998 Iowa Acts, chapter 1202, section 19(7). The motion must be filed as soon as practicable after the reason alleged in the motion becomes known to the party.

If, during the course of the hearing, a party first becomes aware of evidence of bias or other grounds for disqualification, the party may move for disqualification but must establish the grounds by the introduction of evidence into the record.

If the presiding officer determines that disqualification is appropriate, the presiding officer or other person shall withdraw. If the presiding officer determines that withdrawal is not required, the presiding officer shall enter an order to that effect. A party asserting disqualification may seek an interlocutory appeal under rule 10.325(17A) and seek a stay under rule 10.329(17A).

**661—10.310(17A) Consolidation—severance.**

**10.310(1)** *Consolidation.* The presiding officer may consolidate any or all matters at issue in two or more contested case proceedings where: (a) the matters at issue involve common parties or common questions of fact or law; (b) consolidation would expedite and simplify consideration of the issues involved; and (c) consolidation would not adversely affect the rights of any of the parties to those proceedings.

**10.310(2)** *Severance.* The presiding officer may, for good cause shown, order any contested case proceedings or portions thereof severed.

**661—10.311(17A) Pleadings.** Formal pleadings are not required in cases initiated by a notice of appeal or a notice of claim. However, the presiding officer may order the parties to file formal pleadings in any case.

**661—10.312(17A) Service and filing of pleadings and other papers.**

**10.312(1)** *When service required.* Except where otherwise provided by law, every pleading, motion, document, or other paper filed in a contested case proceeding and every paper relating to discovery in such a proceeding shall be served upon each of the parties of record to the proceeding, including the person designated as advocate or prosecutor for the state or the department, simultaneously with their filing. Except for the original notice of hearing and an application for rehearing as provided in Iowa Code section 17A.16(2), the party filing a document is responsible for service on all parties.

**10.312(2)** *Service—how made.* Service upon a party represented by an attorney shall be made upon the attorney unless otherwise ordered. Service is made by delivery or by mailing a copy to the person's last-known address. Service by mail is complete upon mailing, except where otherwise specifically provided by statute, rule, or order.

**10.312(3)** *Filing—when required.* After the notice of hearing, all pleadings, motions, documents or other papers in a contested case proceeding shall be filed with the Administrative Services Division, Department of Public Safety, Wallace State Office Building, Des Moines, Iowa 50319. All pleadings, motions, documents or other papers that are required to be served upon a party shall be filed simultaneously with the department.

**10.312(4)** *Filing—when made.* Except where otherwise provided by law, a document is deemed filed at the time it is delivered to the Administrative Services Division, Department of Public Safety, Wallace State Office Building, Des Moines, Iowa 50319, delivered to an established courier service for immediate delivery to that office, or mailed by first-class mail or state interoffice mail to that office, so long as there is proof of mailing.

**10.312(5)** *Proof of mailing.* Proof of mailing includes either: a legible United States Postal Service postmark on the envelope, a certificate of service, a notarized affidavit, or a certification in substantially the following form:

> I certify under penalty of perjury and pursuant to the laws of Iowa that, on (date of mailing), I mailed copies of (describe document) addressed to the Administrative Services Division, Department of Public Safety, Wallace State Office Building, Des Moines, Iowa 50319, and to the names and addresses of the parties listed below by depositing the same in (a United States post office mailbox with correct postage properly affixed or state interoffice mail).
>
> (Date) (Signature)

**661—10.313(17A) Discovery.**

**10.313(1)** Discovery procedures applicable in civil actions are applicable in contested cases. Unless lengthened or shortened by these rules or by order of the presiding officer, time periods for compliance with discovery shall be as provided in the Iowa Rules of Civil Procedure.

**10.313(2)** Any motion relating to discovery shall allege that the moving party has previously made a good-faith attempt to resolve the discovery issues involved with the opposing party. Motions in regard to discovery shall be ruled upon by the presiding officer. Opposing parties shall be afforded the opportunity to respond within ten days of the filing of the motion unless the time is shortened as provided in subrule 10.313(1). The presiding officer may rule on the basis of the written motion and any response, or may order argument on the motion.

**10.313(3)** Evidence obtained in discovery may be used in the contested case proceeding if that evidence would otherwise be admissible in that proceeding.

**661—10.314(17A) Subpoenas.**

**10.314(1)** *Issuance.*

*a.* An agency subpoena shall be issued to a party on request. Such a request must be in writing. In the absence of good cause for permitting later action, a request for a subpoena must be received at least three days before the scheduled hearing. The request shall include the name, address, and telephone number of the requesting party.

*b.* Except to the extent otherwise provided by law, parties are responsible for service of their own subpoenas and payment of witness fees and mileage expenses.

**10.314(2)** *Motion to quash or modify.* The presiding officer may quash or modify a subpoena for any lawful reason upon motion in accordance with the Iowa Rules of Civil Procedure. A motion to quash or modify a subpoena shall be set for argument promptly.

**661—10.315(17A) Motions.**

**10.315(1)** No technical form for motions is required. However, prehearing motions must be in writing, state the grounds for relief, and state the relief sought.

**10.315(2)** Any party may file a written response to a motion within ten days after the motion is served, unless the time period is extended or shortened by rules of the department or the presiding officer. The presiding officer may consider a failure to respond within the required time period in ruling on a motion.

**10.315(3)** The presiding officer may schedule oral argument on any motion.

**10.315(4)** Motions pertaining to the hearing must be filed and served at least ten days prior to the date of hearing unless there is good cause for permitting later action or the time for such action is lengthened or shortened by administrative rule or an order of the presiding officer.

**661—10.316(17A) Prehearing conference.**

**10.316(1)** Any party may request a prehearing conference. A written request for prehearing conference or an order for prehearing conference on the presiding officer's own motion shall be filed not less than seven days prior to the hearing date. A prehearing conference shall be scheduled not less than three business days prior to the hearing date.

Written notice of the prehearing conference shall be given by the presiding officer to all parties. For good cause the presiding officer may permit variances from this rule.

**10.316(2)** Each party shall bring to the prehearing conference:

*a.* A final list of the witnesses who the party anticipates will testify at hearing. Witnesses not listed may be excluded from testifying unless there was good cause for the failure to include their names; and

*b.* A final list of exhibits which the party anticipates will be introduced at hearing. Exhibits other than rebuttal exhibits that are not listed may be excluded from admission into evidence unless there was good cause for the failure to include them.

*c.* Witness or exhibit lists may be amended subsequent to the prehearing conference within the time limits established by the presiding officer at the prehearing conference. Any such amendments must be served on all parties.

**10.316(3)** In addition to the requirements of subrule 10.316(2), the parties at a prehearing conference may:

*a.* Enter into stipulations of law or fact;

*b.* Enter into stipulations on the admissibility of exhibits;

*c.* Identify matters which the parties intend to request be officially noticed;

*d.* Enter into stipulations for waiver of any provision of law; and

*e.* Consider any additional matters which will expedite the hearing.

**10.316(4)** Prehearing conferences shall be conducted by telephone unless otherwise ordered. Parties shall exchange and receive witness and exhibit lists in advance of a telephone prehearing conference.

**661—10.317(17A) Continuances.** Unless otherwise provided, applications for continuances shall be made to the presiding officer.

**10.317(1)** A written application for a continuance shall:

*a.* Be made at the earliest possible time and no less than seven days before the hearing except in case of unanticipated emergencies;

*b.* State the specific reasons for the request; and

*c.* Be signed by the requesting party or the party's representative.

An oral application for a continuance may be made if the presiding officer waives the requirement for a written motion. However, a party making such an oral application for a continuance must confirm that request by written application within five days after the oral request unless that requirement is waived by the presiding officer. No application for continuance shall be made or granted without notice to all parties except in an emergency where notice is not feasible. The department may waive notice of such requests for a particular case or an entire class of cases.

**10.317(2)** In determining whether to grant a continuance, the presiding officer may consider:

*a.* Prior continuances;
*b.* The interests of all parties;
*c.* The likelihood of informal settlement;
*d.* The existence of an emergency;
*e.* Any objection;
*f.* Any applicable time requirements;
*g.* The existence of a conflict in the schedules of counsel, parties, or witnesses;
*h.* The timeliness of the request; and
*i.* Other relevant factors.

The presiding officer may require documentation of any grounds for continuance.

**661—10.318(17A) Withdrawals.** A party requesting a contested case proceeding may withdraw that request prior to the hearing. Unless otherwise provided, a withdrawal shall be with prejudice.

**661—10.319(17A) Intervention.**

**10.319(1)** *Motion.* A motion for leave to intervene in a contested case proceeding shall state the grounds for the proposed intervention, the position and interest of the proposed intervenor, and the possible impact of intervention on the proceeding. A proposed answer or petition in intervention shall be attached to the motion. Any party may file a response within 14 days of service of the motion to intervene unless the time period is extended or shortened by the presiding officer.

**10.319(2)** *When filed.* Motion for leave to intervene shall be filed as early in the proceeding as possible to avoid adverse impact on existing parties or the conduct of the proceeding. Unless otherwise ordered, a motion for leave to intervene shall be filed before the prehearing conference, if any, or at least 20 days before the date scheduled for hearing. Any later motion must contain a statement of good cause for the failure to file in a timely manner. Unless inequitable or unjust, an intervenor shall be bound by any agreement, arrangement, or other matter previously raised in the case. Requests by untimely intervenors for continuances which would delay the proceeding will ordinarily be denied.

**10.319(3)** *Grounds for intervention.* The movant shall demonstrate that: (a) intervention would not unduly prolong the proceedings or otherwise prejudice the rights of existing parties; (b) the movant is likely to be aggrieved or adversely affected by a final order in the proceeding; and (c) the interests of the movant are not adequately represented by existing parties.

**10.319(4)** *Effect of intervention.* If appropriate, the presiding officer may order consolidation of the petitions and briefs of different parties whose interests are aligned with each other and limit the number of representatives allowed to participate actively in the proceedings. A person granted leave to intervene is a party to the proceeding. The order granting intervention may restrict the issues that may be raised by the intervenor or otherwise condition the intervenor's participation in the proceeding.

**661—10.320(17A) Hearing procedures.**

**10.320(1)** The presiding officer presides at the hearing, and may rule on motions, require briefs, issue a proposed decision, and issue such orders and rulings as will ensure the orderly conduct of the proceedings.

**10.320(2)** All objections shall be timely made and stated on the record.

**10.320(3)** Parties have the right to participate or to be represented in all hearings or prehearing conferences related to their case. Partnerships, corporations, or associations may be represented by

any member, officer, director, or duly authorized agent. Any party may be represented by an attorney or another person authorized by law.

**10.320(4)** Subject to terms and conditions prescribed by the presiding officer, parties have the right to introduce evidence on issues of material fact, cross-examine witnesses present at the hearing as necessary for a full and true disclosure of the facts, present evidence in rebuttal, and submit briefs and engage in oral argument.

**10.320(5)** The presiding officer shall maintain the decorum of the hearing and may refuse to admit or may expel anyone whose conduct is disorderly.

**10.320(6)** Witnesses may be sequestered during the hearing.

**10.320(7)** The presiding officer shall conduct the hearing in the following manner:

*a.* The presiding officer shall give an opening statement briefly describing the nature of the proceedings;

*b.* The parties shall be given an opportunity to present opening statements;

*c.* Parties shall present their cases in the sequence determined by the presiding officer;

*d.* Each witness shall be sworn or affirmed by the presiding officer or the court reporter, and be subject to examination and cross-examination. The presiding officer may limit questioning in a manner consistent with law;

*e.* When all parties and witnesses have been heard, parties may be given the opportunity to present final arguments.

**661—10.321(17A) Evidence.**

**10.321(1)** The presiding officer shall rule on admissibility of evidence and may, where appropriate, take official notice of facts in accordance with all applicable requirements of law.

**10.321(2)** Stipulation of facts is encouraged. The presiding officer may make a decision based on stipulated facts.

**10.321(3)** Evidence in the proceeding shall be confined to the issues as to which the parties received notice prior to the hearing unless the parties waive their right to such notice or the presiding officer determines that good cause justifies expansion of the issues. If the presiding officer decides to admit evidence on issues outside the scope of the notice over the objection of a party who did not have actual notice of those issues, that party, upon timely request, shall receive a continuance sufficient to amend pleadings and to prepare on the additional issue.

**10.321(4)** The party seeking admission of an exhibit must provide opposing parties with an opportunity to examine the exhibit prior to the ruling on its admissibility. Copies of documents should normally be provided to opposing parties.

All exhibits admitted into evidence shall be appropriately marked and be made part of the record.

**10.321(5)** Any party may object to specific evidence or may request limits on the scope of any examination or cross-examination. Such an objection shall be accompanied by a brief statement of the grounds upon which it is based. The objection, the ruling on the objection, and the reasons for the ruling shall be noted in the record. The presiding officer may rule on the objection at the time it is made or may reserve a ruling until the written decision.

**10.321(6)** Whenever evidence is ruled inadmissible, the party offering that evidence may submit an offer of proof on the record. The party making the offer of proof for excluded oral testimony shall briefly summarize the testimony or, with permission of the presiding officer, present the testimony. If the excluded evidence consists of a document or exhibit, it shall be marked as part of an offer of proof and inserted in the record.

**661—10.322(17A) Default.**

**10.322(1)** If a party fails to appear or participate in a contested case proceeding after proper service of notice, the presiding officer may, if no adjournment is granted, enter a default decision or proceed with the hearing and render a decision in the absence of the party.

**10.322(2)** Where appropriate and not contrary to law, any party may move for default against a party who has requested the contested case proceeding and has failed to file a required pleading or has failed to appear after proper service.

**10.322(3)** Default decisions or decisions rendered on the merits after a party has failed to appear or participate in a contested case proceeding become final agency action unless, within 15 days, or other period of time specified by statute or rule, after the date of notification or mailing of the decision, a motion to vacate is filed and served on all parties or an appeal of a decision on the merits is timely initiated within the time provided by rule 10.327(17A). A motion to vacate must state all facts relied upon by the moving party which establish that good cause existed for that party's failure to appear or participate at the contested case proceeding. Each fact so stated must be substantiated by at least one sworn affidavit of a person with personal knowledge of each such fact, which affidavit(s) must be attached to the motion.

**10.322(4)** The time for further appeal of a decision for which a timely motion to vacate has been filed is stayed pending a decision on the motion to vacate.

**10.322(5)** Properly substantiated and timely filed motions to vacate shall be granted only for good cause shown. The burden of proof as to good cause is on the moving party. Adverse parties shall have ten days, or other time specified by the presiding officer, to respond to a motion to vacate. Adverse parties shall be allowed to conduct discovery as to the issue of good cause and to present evidence on the issue prior to a decision on the motion, if a request to do so is included in that party's response.

**10.322(6)** "Good cause" for purposes of this rule shall have the same meaning as "good cause" for setting aside a default judgment under Iowa Rule of Civil Procedure 236.

**10.322(7)** A decision denying a motion to vacate is subject to further appeal within the time limit allowed for further appeal of a decision on the merits in the contested case proceeding. A decision granting a motion to vacate is subject to interlocutory appeal by the adverse party pursuant to rule 10.325(17A).

**10.322(8)** If a motion to vacate is granted and no timely interlocutory appeal has been taken, the presiding officer shall issue another notice of hearing and the contested case shall proceed accordingly.

**10.322(9)** A default decision may award any relief consistent with the request for relief made in the petition and embraced in its issues but, unless the defaulting party has appeared, it cannot exceed the relief demanded.

**10.322(10)** A default decision may provide either that the default decision is to be stayed pending a timely motion to vacate or that the default decision is to take effect immediately, subject to a request for stay under rule 10.329(17A).

**661—10.323(17A) Ex parte communication.**

**10.323(1)** Prohibited communications. Unless required for the disposition of ex parte matters specifically authorized by statute, following issuance of the notice of hearing, there shall be no communication, directly or indirectly, between the presiding officer and any party or representative of any party or any other person with a direct or indirect interest in such case in connection with any issue of fact or law in the case except upon notice and opportunity for all parties to participate. This does not prohibit persons jointly assigned such tasks from communicating with each other. Nothing in this provision is intended to preclude the presiding officer from communicating with members of the agency or seeking the advice or help of persons other than those with a personal interest in, or those engaged in personally investigating as defined in subrule 10.309(2), prosecuting, or advocating in, either the case under consideration or a pending factually related case involving the same parties as long as those persons do not directly or indirectly communicate to the presiding officer any ex parte communications they have received of a type that the presiding officer would be prohibited from receiving or that furnish, augment, diminish, or modify the evidence in the record.

**10.323(2)** Prohibitions on ex parte communications commence with the issuance of the notice of hearing in a contested case and continue for as long as the case is pending.

**10.323(3)** Written, oral or other forms of communication are "ex parte" if made without notice and opportunity for all parties to participate.

**10.323(4)** To avoid prohibited ex parte communications, notice must be given in a manner reasonably calculated to give all parties a fair opportunity to participate. Notice of written communications shall be provided in compliance with rule 10.312(17A) and may be supplemented by telephone, facsimile, electronic mail or other means of notification. Where permitted, oral communications may be initiated through conference telephone call including all parties or their representatives.

**10.323(5)** Persons who jointly act as presiding officer in a pending contested case may communicate with each other without notice or opportunity for parties to participate.

**10.323(6)** The commissioner of public safety or other persons may be present in deliberations or otherwise advise the presiding officer without notice or opportunity for parties to participate as long as they are not disqualified from participating in the making of a proposed or final decision under any provision of law and they comply with subrule 10.323(1).

**10.323(7)** Communications with the presiding officer involving uncontested scheduling or procedural matters do not require notice or opportunity for parties to participate. Parties should notify other parties prior to initiating such contact with the presiding officer when feasible, and shall notify other parties when seeking to continue hearings or other deadlines pursuant to rule 10.317(17A).

**10.323(8)** Disclosure of prohibited communications. A presiding officer who receives a prohibited ex parte communication during the pendency of a contested case must initially determine if the effect of the communication is so prejudicial that the presiding officer should be disqualified. If the presiding officer determines that disqualification is warranted, a copy of any prohibited written communication, all written responses to the communication, a written summary stating the substance of any prohibited oral or other communication not available in written form for disclosure, all responses made, and the identity of each person from whom the presiding officer received a prohibited ex parte communication shall be submitted for inclusion in the record under seal by protective order or disclosed, as determined by the presiding officer. If the presiding officer determines that disqualification is not warranted, such documents shall be submitted for inclusion in the record and served on all parties. Any party desiring to rebut the prohibited communication must be allowed the opportunity to do so upon written request filed within ten days after notice of the communication.

**10.323(9)** Promptly after being assigned to serve as presiding officer at any stage in a contested case proceeding, a presiding officer shall disclose to all parties material factual information received through ex parte communication prior to such assignment unless the factual information has already been or shortly will be disclosed pursuant to Iowa Code section 17A.13(2) or through discovery. Factual information contained in an investigative report or similar document need not be separately disclosed by the presiding officer as long as such documents have been or will shortly be provided to the parties.

**10.323(10)** The presiding officer may render a proposed or final decision imposing appropriate sanctions for violations of this rule including default, a decision against the offending party, censure, or suspension or revocation of the privilege to practice before the agency. Violation of ex parte communication prohibitions by department personnel shall be reported to the Internal Affairs Bureau, Department of Public Safety, Wallace State Office Building, Des Moines, Iowa 50319, for possible sanctions including censure, suspension, dismissal, or other disciplinary action.

**661—10.324(17A) Recording costs.** Upon request, the department shall provide a copy of the whole or any portion of the record at cost. The cost of preparing a copy of the record or of transcribing the hearing record shall be paid by the requesting party.

Parties who request that a hearing be recorded by certified shorthand reporters rather than by electronic means shall bear the cost of that recordation, unless otherwise provided by law.

**661—10.325(17A) Interlocutory appeals.** Upon written request of a party or on the commissioner's own motion, the commissioner of public safety may review an interlocutory order of the presiding officer. In determining whether to do so, the commissioner shall weigh the extent to which its granting the interlocutory appeal would expedite final resolution of the case and the extent to which review of that interlocutory order by the agency at the time it reviews the proposed decision of the presiding officer

would provide an adequate remedy. Any request for interlocutory review must be filed within 14 days of issuance of the challenged order, but no later than the time for compliance with the order or the date of hearing, whichever is first.

**661—10.326(17A) Final decision.**

**10.326(1)** When commissioner of public safety presides over the reception of evidence at the hearing, the commissioner's decision is a final decision.

**10.326(2)** When the commissioner does not preside at the reception of evidence, the presiding officer shall make a proposed decision. The proposed decision becomes the final decision of the agency without further proceedings unless there is an appeal to, or review on motion of, the department within the time provided in rule 10.327(17A).

**661—10.327(17A) Appeals and review.**

**10.327(1)** *Appeal by party.* Any adversely affected party may appeal a proposed decision to the commissioner of public safety within 30 days after issuance of the proposed decision.

**10.327(2)** *Review.* The commissioner may initiate review of a proposed decision on the commissioner's own motion at any time within 30 days following the issuance of such a decision.

**10.327(3)** *Notice of appeal.* An appeal of a proposed decision is initiated by filing a timely notice of appeal with the Administrative Services Division, Department of Public Safety, Wallace State Office Building, Des Moines, Iowa 50319. The notice of appeal must be signed by the appealing party or a representative of that party and contain a certificate of service. The notice shall specify:

*a.* The parties initiating the appeal;

*b.* The proposed decision or order appealed from;

*c.* The specific findings or conclusions to which exception is taken and any other exceptions to the decision or order;

*d.* The relief sought;

*e.* The grounds for relief.

**10.327(4)** *Requests to present additional evidence.* A party may request the taking of additional evidence only by establishing that the evidence is material, that good cause existed for the failure to present the evidence at the hearing, and that the party has not waived the right to present the evidence. A written request to present additional evidence must be filed with the notice of appeal or, by a nonappealing party, within 14 days of service of the notice of appeal. The commissioner may remand a case to the presiding officer for further hearing or may preside at the taking of additional evidence.

**10.327(5)** *Scheduling.* The department shall issue a schedule for consideration of the appeal.

**10.327(6)** *Briefs and arguments.* Unless otherwise ordered, within 20 days of the notice of appeal or order for review, each appealing party may file exceptions and briefs. Within 20 days thereafter, any party may file a responsive brief. Briefs shall cite any applicable legal authority and specify relevant portions of the record in that proceeding. Written requests to present oral argument shall be filed with the briefs.

The commissioner may resolve the appeal on the briefs or provide an opportunity for oral argument. The commissioner may shorten or extend the briefing period as appropriate.

**661—10.328(17A) Applications for rehearing.**

**10.328(1)** *By whom filed.* Any party to a contested case proceeding may file an application for rehearing from a final order.

**10.328(2)** *Content of application.*

*a.* The application for rehearing shall state on whose behalf it is filed, the specific grounds for rehearing, and the relief sought. In addition, the application shall state whether the applicant desires reconsideration of all or part of the agency decision on the existing record and whether, on the basis of the grounds enumerated in subrule 10.327(4), the applicant requests an opportunity to submit additional evidence.

*b.* Substantially state in separate numbered paragraphs the following:

(1) Clear and concise statements of the reasons for requesting a rehearing and each and every error which the party alleges to have been committed during the contested case proceedings;

(2) Clear and concise statements of all relevant facts upon which the party relies;

(3) Refer to any particular statute or statutes and any rule or rules involved;

(4) The signature of the party or that of the representative.

**10.328(3)** *Time of filing.* The application shall be filed with the Administrative Services Division, Department of Public Safety, Wallace State Office Building, Des Moines, Iowa 50319, within 20 days after issuance of the final decision.

**10.328(4)** *Notice to other parties.* A copy of the application shall be timely mailed by the applicant to all parties of record not joining therein. If the application does not contain a certificate of service, the department shall serve copies on all parties.

**10.328(5)** *Disposition.* Any application for a rehearing shall be deemed denied unless the agency grants the application within 20 days after its filing.

**661—10.329(17A) Stays of agency actions.**

**10.329(1)** *When available.*

*a.* Any party to a contested case proceeding may petition the department for a stay of an order issued in that proceeding or for other temporary remedies, pending review by the agency. The petition shall be filed with the notice of appeal and shall state the reasons justifying a stay or other temporary remedy. The commissioner may rule on the stay or authorize the presiding officer to do so.

*b.* Any party to a contested case proceeding may petition the department for a stay or other temporary remedies pending judicial review of all or part of that proceeding. The petition shall state the reasons justifying a stay or other temporary remedy.

**10.329(2)** *When granted.* In determining whether to grant a stay, the presiding officer or commissioner shall consider the factors listed in 1998 Iowa Acts, chapter 1202, section 23(5c).

**10.329(3)** *Vacation.* A stay may be vacated by the issuing authority upon application of the department or any other party.

**661—10.330(17A) No factual dispute contested cases.** If the parties agree that no dispute of material fact exists as to a matter that would be a contested case if such a dispute of fact existed, the parties may present all relevant admissible evidence either by stipulation or otherwise as agreed by the parties, without necessity for the production of evidence at an evidentiary hearing. If such agreement is reached, a jointly submitted schedule detailing the method and timetable for submission of the record, briefs and oral argument should be submitted to the presiding officer for approval as soon as practicable. If the parties cannot agree, any party may file and serve a motion for summary judgment pursuant to the rules governing such motions.

**661—10.331(17A) Emergency adjudicative proceedings.**

**10.331(1)** *Necessary emergency action.* To the extent necessary to prevent or avoid immediate danger to the public health, safety, or welfare and, consistent with the Constitution and other provisions of law, the department may issue a written order in compliance with 1998 Iowa Acts, chapter 1202, section 21, to suspend a license in whole or in part, order the cessation of any continuing activity, order affirmative action, or take other action within the jurisdiction of the agency by emergency adjudicative order. Before issuing an emergency adjudicative order the agency shall consider factors including, but not limited to, the following:

*a.* Whether there has been a sufficient factual investigation to ensure that the department is proceeding on the basis of reliable information;

*b.* Whether the specific circumstances which pose immediate danger to the public health, safety or welfare have been identified and determined to be continuing;

*c.* Whether the person required to comply with the emergency adjudicative order may continue to engage in other activities without posing immediate danger to the public health, safety or welfare;

*d.* Whether imposition of monitoring requirements or other interim safeguards would be sufficient to protect the public health, safety or welfare; and

*e.* Whether the specific action contemplated by the department is necessary to avoid the immediate danger.

**10.331(2)** *Issuance of order.*

*a.* An emergency adjudicative order shall contain findings of fact, conclusions of law, and policy reasons to justify the determination of an immediate danger in the department's decision to take immediate action.

*b.* The written emergency adjudicative order shall be immediately delivered to persons who are required to comply with the order by utilizing one or more of the following procedures:

(1) Personal delivery;

(2) Certified mail, return receipt requested, to the last address on file with the department;

(3) Certified mail to the last address on file with the department;

(4) First-class mail to the last address on file with the department; or

(5) Fax. Fax may be used as the sole method of delivery if the person required to comply with the order has filed a written request that department orders be sent by fax and has provided a fax number for that purpose.

*c.* To the degree practicable, the department shall select the procedure for providing written notice that best ensures prompt, reliable delivery.

**10.331(3)** *Oral notice.* Unless the written emergency adjudicative order is provided by personal delivery on the same day that the order issues, the department shall make reasonable immediate efforts to contact by telephone the persons who are required to comply with the order.

**10.331(4)** *Completion of proceedings.* After the issuance of an emergency adjudicative order, the department shall proceed as quickly as feasible to complete any proceedings that would be required if the matter did not involve an immediate danger.

Issuance of a written emergency adjudicative order shall include notification of the date on which agency proceedings are scheduled for completion. After issuance of an emergency adjudicative order, continuance of further agency proceedings to a later date will be granted only in compelling circumstances upon application in writing.

**661—10.332(17A) Burden of proof.** Unless otherwise provided by law, the burden of proof in all contested case proceedings in which the department is a party shall be on the petitioner.

These rules are intended to implement Iowa Code chapter 17A as amended by 1998 Iowa Acts, chapter 1202.

[Filed June 30, 1975]
[Filed 6/7/79, Notice 5/2/79—published 6/27/79, effective 8/2/79]
[Filed 4/1/88, Notice 9/23/87—published 4/20/88, effective 5/25/88]
[Filed 4/30/99, Notice 3/24/99—published 5/19/99, effective 7/1/99]
[Filed 10/5/01, Notice 5/30/01—published 10/31/01, effective 1/1/02]

# CHAPTER 11
# IDENTIFICATION SECTION OF THE DIVISION OF CRIMINAL INVESTIGATION

[Rules 11.1 to 11.7 appeared as 4.3 prior to 6/27/79]
[Prior to 4/20/88, see Public Safety Department[680] Ch 11]

**661—11.1(17A,690,692) Identification section.** The identification section maintains information necessary to identify persons with criminal histories. It collects, files and disseminates criminal history data to authorized criminal justice agencies and the public upon request and updates criminal history records as a continual process.

**661—11.2(17A,690,692) Definitions.**

*"Authorized agency"* means a division or office of the state of Iowa designated by a state to report, receive, or disseminate information under Iowa state law, administrative rule or Public Law 103-209.

*"Criminal identification records"* shall mean either of the following records, the forms for which are provided by the department to law enforcement agencies:

1. Department of public safety arrest fingerprint cards.
2. State of Iowa final disposition reports.

*"Dependent adult abuse registry"* means the official registry kept by the department of human services, established pursuant to Iowa Code chapter 235B.

*"Employee"* means a person who provides services to a qualified entity and is compensated for those services.

*"Fee"* means any cost associated with conducting a state or national criminal history record check.

*"Felony"* and *"misdemeanor"* shall have the same meaning and classifications as described in Iowa Code sections 701.7 and 701.8.

*"Fitness determination"* means an analysis of criminal history information to determine whether or not it disqualifies an individual from holding a particular position either as an employee or a volunteer.

*"National record check"* means a criminal history record check from the FBI that is fingerprint-based and is transmitted through the state central repository.

*"Nonlaw enforcement agency"* means an agency authorized by law to receive criminal history data from the department which is not a "criminal justice agency" as defined in Iowa Code section 692.1, subsection 10, or which is not an institution which trains law enforcement officers for certification under Iowa Code chapter 80B.

*"Qualified entity"* means a business or organization, whether public, private, for-profit, not-for-profit, or voluntary, that provides child care or child care placement services, including a business or organization that licenses or certifies others to provide child care or child care placement services. This definition also applies to organizations which provide care to the elderly or the disabled.

The *"taking of fingerprints"* shall mean the obtaining of a fully rolled set of inked fingerprint impressions having suitable quality for fingerprint classification and identification.

*"Volunteer"* means a person who provides services to a qualified entity without compensation.

This rule implements Iowa Code chapters 690 and 692.

*"Working day"* means any day except any of the following:

1. Saturday.
2. Sunday.
3. State holiday.
4. Federal holiday during which the administrative office of the submitting agency is closed.
5. Any day during which the administrative office of the agency is closed or relocated due to weather or road conditions or any condition related to a disaster emergency proclamation issued by the governor pursuant to Iowa Code section 29C.6.

**661—11.3(690,692) Release of information.** Records maintained by the identification section are public records and are released to criminal justice agencies and the public as authorized by statute. Only the department of public safety may release criminal history information maintained by the department to non-criminal justice agencies or persons.

**661—11.4(690,692) Right of review.** Any person who has a criminal history record on file with the division of criminal investigation has the right to review and obtain a copy of the record. This right may be exercised by an attorney acting on behalf of the person with the criminal history record with written authorization and fingerprint identification of the person with the criminal history record. A copy of a criminal history record provided pursuant to this rule is subject to the fee provided in rule 661—11.15(692).

**661—11.5(690,692) Review of record.** Any individual or that individual's attorney, acting with written authorization from the individual, may review or obtain a copy of the individual's criminal history record during normal business hours at the headquarters of the division in the Wallace State Office Building in Des Moines or by submitting a request on a form provided by the department of public safety. A copy of this request form may be obtained by writing to Identification Section, Division of Criminal Investigation, Department of Public Safety, Wallace State Office Building, Des Moines, Iowa 50319, by telephoning the identification section at (515)281-8706 or by sending a request by electronic mail to cchinfo@dps.state.ia.us. The request form may also be downloaded from the division's Web site at http://www.state.ia.us/government/dps/dci/. The completed request form must be notarized, if submitted by mail, and accompanied by a set of the fingerprints of the individual whose criminal history record is being requested, along with submission of the fee established in rule 661—11.15(692). After the record check has been completed, the fingerprints submitted for verification shall be returned, upon request, or destroyed.

**661—11.6(17A,690,692) Inaccuracies in criminal history.** If an individual believes inaccuracies exist in the individual's criminal history, notice may be filed with the division outlining the alleged inaccuracies accompanied by any available supporting data. In all instances where a notice is so filed, the division contacts the arresting agencies, court of record and institutions to verify record accuracy. Any necessary changes shall be made to the individual's record. Any agency previously receiving a copy of the inaccurate record shall be so notified with a corrected copy. A final report shall be made to the individual who has so filed a notice of correction within 20 days of said filing. If, after notice is filed and the division makes its final report, the individual is still of the opinion that inaccuracies exist within the records, an appeal of the final decision of the division to the Polk county district court may be made.

**661—11.7(17A,690,692) Fingerprint files and crime reports.** This section also maintains all fingerprint files and has personnel for the entry of crime reports to the criminal system.

**661—11.8(690) Taking of fingerprints.** The taking of fingerprints shall be in compliance with Iowa Code sections 232.148(2), 690.2 and 690.4. Fingerprints taken pursuant to these sections shall be submitted to the identification section of the division of criminal investigation, within two working days and to the Federal Bureau of Investigation.

**661—11.9(17A,690,692) Arresting agency portion of final disposition form.** The sheriff of each county and the chief of police of each city shall complete the arresting agency portion of the final disposition form with the arrest information on all persons whose fingerprints are taken in accordance with the rules or Iowa Code section 690.2, and thereafter forward the form to the appropriate county attorney or to the juvenile court officer who received the referral if the case remains in juvenile court.

**661—11.10(690,692) Final disposition form.** The county attorney of each county or juvenile court officer who received the referral shall complete a final disposition report and submit it to the division of criminal investigation within 30 days when a preliminary information or citation is dismissed without new charges being filed, or when a case is ignored by a grand jury. When an indictment is returned or a county attorney's information filed, the final disposition form shall be forwarded by the county attorney to the clerk of the court having jurisdiction. The clerk of court shall forward a copy to the division of criminal investigation within 30 days after judgment. If a juvenile is processed through juvenile court, the juvenile court officer shall forward the disposition form to the division of criminal investigation.

**661—11.11(692) Destruction of fingerprints.** Rescinded IAB 11/22/95, effective 1/1/96.

**661—11.12(692) Release of information to the public.** The department may release criminal history information to any person, or public or private agency, upon written application. Non-criminal justice agencies may not receive information regarding arrests older than 18 months that do not have dispositions or deferred judgments where the department has received official notice of successful completion of probation, unless a waiver has been given to the requestor from the person who is the subject of the criminal history information and is presented to the department at the time the request for the information is made.

Each record released to a non-criminal justice agency shall prominently display the statement: "AN ARREST WITHOUT DISPOSITION IS NOT AN INDICATION OF GUILT."

**661—11.13(692) Redissemination of criminal history information by youth service agencies.** Rescinded IAB 7/3/96, effective 7/1/96.

**661—11.14(692) Scope of record checks for non-criminal justice agencies and individuals.** Record checks made for non-criminal justice agencies and individuals pursuant to these rules will be based upon name, including maiden name and aliases, if any, and birth date. This information is not sufficient to effect a precise identification of a subject. Persons may have the same name and birth date. Persons may use several names. The records of the department are based upon reports from other agencies. The department, therefore, cannot warrant the completeness or accuracy of the information provided. Agencies and individuals receiving criminal history information are therefore advised to verify all information received from the department to the extent possible (e.g., by contacting the reported arresting agency or court).

**661—11.15(692) Fees.** All individuals, their attorneys, and other non-criminal justice agencies applying for receipt of criminal history information may be assessed a fee. The department may accept cash, money orders, or checks. Other arrangements may be made, such as a prepaid retainer or credit card. The fee for receipt of criminal history information from the department shall be not more than $13 for each surname for which information is requested and not more than $15 per surname for fax service. The fee shall be prominently posted at the headquarters of the division of criminal investigation. Each alias or maiden name submitted shall be considered a separate name for purposes of computing this fee. Employers must pay the cost of the criminal history fee of a potential employee.

**661—11.16(692) Subpoenas and civil process.** Rescinded IAB 7/3/96, effective 7/1/96.

**661—11.17(17A,22,692) Requests for criminal history data.**

**11.17(1)** *Requests for criminal history data.* Persons or agencies requesting criminal history data should direct requests in writing using forms or methods approved by the commissioner of public safety. Requests for forms to use in requesting criminal history information may be addressed by mail to the Identification Section, Division of Criminal Investigation, Iowa Department of Public Safety, Wallace State Office Building, Des Moines, Iowa 50319, or by electronic mail via the Internet to cchinfo@dps.state.ia.us.

The commissioner may authorize other methods of requesting criminal history information besides mail. These other methods may include fax transmission, electronic mail, or computer access. This authorization by the commissioner of public safety shall be based on the ability to efficiently and accurately receive and disseminate criminal history information.

**11.17(2)** *Public complaints.* Public complaints concerning the operation of criminal history or intelligence data systems should be directed in writing to the commissioner of public safety. Complaints should be specific in spelling out the time, date and place of the alleged violation and any action requested of the commissioner.

**11.17(3)** *Approval of agreements.* All agreements, arrangements and systems for the transmission and exchange of criminal history data required to be approved by the commissioner shall be submitted in writing at least 30 days before their proposed effective date.

This rule is intended to implement Iowa Code section 692.19.

**661—11.18(690) Administrative sanctions.** The commissioner of public safety shall deny or restrict access to criminal history records maintained by the identification section of the division of criminal investigation to any agency which fails to comply with the requirements of Iowa Code chapters 690 and 692 for submission of fingerprints and disposition reports to the department of public safety. The commissioner shall notify the affected agency in writing prior to denying or restricting access, giving details of the requirements and the nature of the failure to comply.

Any agency which has received notification from the commissioner that their access to criminal history records is to be denied or restricted may protest this action. Protests must be filed with the administrative services division within 30 days of the date of the notification from the commissioner in accordance with rule 661—10.101(17A).

This rule is intended to implement Iowa Code section 690.5.

**661—11.19(232) Juvenile fingerprints and criminal histories.**

**11.19(1)** *Authority to fingerprint.* A law enforcement agency may fingerprint and photograph any juvenile who has been taken into custody and charged with the commission of an offense which would be a serious misdemeanor or above if committed by an adult. Fingerprints of juveniles taken pursuant to this subrule shall be submitted to the division of criminal investigation.

**11.19(2)** *Fingerprints of juveniles waived to adult court.* If jurisdiction over a juvenile suspect has been transferred from juvenile court to adult court, then fingerprints of that suspect taken pursuant to Iowa Code section 232.148 and transmitted to the division of criminal investigation shall be handled by the division in the same manner as fingerprints of adult suspects are handled and are subject to the same provisions of law and these rules which govern fingerprints of adult criminal suspects.

**11.19(3)** *Fingerprints entered into Automated Fingerprint Identification System (AFIS).* Fingerprints of juveniles shall be entered into the AFIS maintained by the department of public safety.

**11.19(4)** *Juvenile criminal histories.*

*a.* A fingerprint card received for a juvenile suspect shall be used to establish a criminal history record for the suspect.

*b.* Criminal histories of juveniles over whom jurisdiction has been transferred from juvenile court to adult court shall be handled in the same manner as criminal histories of adults.

*c.* Criminal histories of juveniles who remain under the jurisdiction of the juvenile court shall be maintained only if the juvenile is adjudicated delinquent based upon an offense which would be a serious or aggravated misdemeanor or felony if committed by an adult. The criminal history record established in response to receiving a fingerprint card shall be expunged if the delinquency petition is dismissed. Juvenile court judges shall order that juveniles be fingerprinted and the prints submitted to the division of criminal investigation if the juvenile has been adjudicated delinquent for an offense of serious misdemeanor or above if committed by an adult.

*d.* Criminal history records of juveniles over whom jurisdiction has not been transferred from juvenile to adult court shall be expunged when the subject reaches the age of 21 unless the subject has been convicted of a serious or aggravated misdemeanor or a felony between the ages of 18 and 21. If the subject has been convicted of a serious or aggravated misdemeanor or a felony between the ages of 18 and 21, the criminal history record shall be maintained in the same manner as adult criminal history records.

**11.19(5)** *Tracking criminal history records.* The division of criminal investigation shall establish an internal procedure for tracking criminal history records expunged from the files of the division for audit purposes only.

This rule is intended to implement Iowa Code section 232.148 as amended by 1999 Iowa Acts, House File 403.

**661—11.20(135C) Release of dependent adult abuse records.** Effective July 1, 1997, the department of public safety, division of criminal investigation, may release to health care facilities licensed under Iowa Code chapter 135C dependent adult abuse registry information received from the department of human services. The department of public safety and the department of human services shall enter into a 28E agreement to carry out this rule.

**661—11.21(692) Criminal history checks for qualified entities.**

**11.21(1)** The department of public safety may process requests for national criminal history record checks for a qualified entity.

**11.21(2)** All qualified entities requesting criminal history record checks shall be required to pay any applicable state and federal fees associated with non-criminal justice record checks. The qualified entity is responsible for such fees whether the qualified entity requests or receives the information directly or through an agency authorized to make fitness determinations as provided in subrule 11.21(3).

**11.21(3)** Any public entity which has been duly authorized by statute or administrative rule to conduct fitness determinations of volunteers or employees of a qualified entity may receive state and national criminal history checks in order to do so.

**11.21(4)** A school district considering an applicant for a teaching position is a qualified entity pursuant to 2007 Iowa Acts, Senate File 601, section 102. A school district may submit a request for a national criminal history check of an applicant for employment as a teacher. The request shall be submitted on a form designated by the division of criminal investigation and shall be accompanied by completed fingerprint cards for the applicant and the applicable fee. The district may contact the division of criminal investigation by telephone at (515)725-6066 or by electronic mail at cchinfo@dps.state.ia.us, prior to submitting the request, to obtain instructions on the submission or may consult the Web site of the division for this information.

These rules are intended to implement Iowa Code chapter 692.

[Filed 6/30/75]
[Filed 9/29/75, Notice 8/25/75—published 10/6/75, effective 11/10/75]
[Filed 6/7/79, Notice 5/2/79—published 6/27/79, effective 8/2/79]
[Filed emergency 6/27/84—published 7/18/84, effective 7/1/84]
[Filed 1/10/86, Notice 11/20/85—published 1/29/86, effective 3/6/86]
[Filed 4/1/88, Notice 9/23/87—published 4/20/88, effective 5/25/88]
[Filed 9/19/88, Notice 7/27/88—published 10/5/88, effective 11/9/88][1]
[Filed 4/22/94, Notice 10/27/93—published 5/11/94, effective 6/15/94]
[Filed 1/27/95, Notice 12/21/94—published 2/15/95, effective 4/1/95]
[Filed 11/3/95, Notice 8/2/95—published 11/22/95, effective 1/1/96]
[Filed emergency 3/22/96 after Notice 11/8/95—published 4/10/96, effective 3/22/96]
[Filed emergency 6/14/96—published 7/3/96, effective 7/1/96]
[Filed emergency 6/27/97 after Notice 5/21/97—published 7/16/97, effective 7/1/97]
[Filed emergency 3/1/99—published 3/24/99, effective 3/1/99]
[Filed emergency 6/30/99—published 7/28/99, effective 7/1/99]
[Filed emergency 6/25/07—published 7/18/07, effective 7/1/07]
[Filed emergency 6/30/08—published 7/30/08, effective 7/1/08]

[1] Effective date of 11/9/88 delayed 70 days by the Administrative Rules Review Committee at its October meeting. Delay lifted by ARRC 11/16/88

# CHAPTER 12
# CRIMINALISTICS LABORATORY

[Rules 12.1 to 12.11 appeared as 4.5 prior to 6/27/79]

[Prior to 4/20/88, see Public Safety Department[680] Ch 12]

Rescinded IAB 11/22/06, effective 1/1/07. See 661—Chapter 150.

# CHAPTER 13
# SPECIAL RAILWAY AGENTS

[Rules 13.1 to 13.16 appeared as 4.6 prior to 6/27/79]
[Prior to 4/20/88, see Public Safety Department[680] Ch 13]

**661—13.1(17A,80) Appointment of railway special agents.** The administrative services division processes applications for appointment as railway special agents from persons who are regularly employed by a railroad so those persons may protect railroad property.

**661—13.2(17A,80) Standards.** All applicants shall meet minimum standards to qualify as law enforcement officers as established in the Iowa law enforcement academy rules.

**661—13.3(17A,80) Training requirements.** All applicants shall meet all training requirements of the Iowa law enforcement academy.

**661—13.4(17A,80) Letter of request.** The chief special agent of the railroad company shall submit a letter of request for the appointment of a railroad employee as railway special agent. This letter and all other correspondence is to be sent to this division, Attention: Railway special agent license. The letter shall state the applicant's full name (first, middle and last) and address and should state to whom the application should be mailed.

**661—13.5(17A,80) Application form.** Each railway special agent applicant shall complete an application form that is not reproduced in these rules but is available and may be obtained from this division. This form should be typewritten or clearly printed in ink and all questions must be answered, if applicable.

**661—13.6(17A,80) Photographs.** Each application shall have the required 3″ × 3″ photograph, as required, and two additional photographs measuring 1½″ by 1½″ suitable for the identification card.

**661—13.7(17A,80) Vision classification.** Each applicant's vision classification for each eye with and without glasses shall be indicated.

**661—13.8(17A,80) Surety bond.** It is required that the requesting railroad company submit a surety bond in the amount of $5,000 for the person to be appointed. Such surety bond in the amount stated shall be issued by a bonding or surety company licensed through the Iowa insurance commission to do business in the state of Iowa. The surety bond shall name the railway special agent and the bond shall state that the bonded person is a duly appointed railway special agent. Surety bonds shall be issued for each person and shall remain in effect until 30 days after the company providing the bond gives notice to the department that the bond will be terminated.

**661—13.9(17A,80) Background investigation.** All railroad employers who are seeking to have an applicant appointed as a railway special agent shall conduct a complete background investigation of each applicant. The results of this background investigation shall be submitted with the application in typewritten report form. This background investigation shall contain, but not be limited to, the following.

**13.9(1)** Written comments from former employers in reference to honesty, integrity, character, personality and working performance of the applicant.

**13.9(2)** Written comments by personnel with any state, municipal or county law enforcement agency about the applicant and the applicant's prior employment and residences.

**13.9(3)** A check with all creditors for payment record and obligations.

**13.9(4)** A check with the clerk of court in the applicant's county of residence for any court action, civil or criminal.

**13.9(5)** A check with the county recorder's office where applicant resides to determine any property listed in the applicant's name and liens which may be on file.

**13.9(6)** A check with the credit bureau where the applicant resides or has been employed for the applicant's credit rating.

**13.9(7)** Certified copies of any educational records that are available (high school and college transcripts) and DD201 military form, if any.

**661—13.10(17A,80) Weapons permit.** If the applicant needs a weapons permit, the application shall show that the requirements outlined in Chapter 4, "Weapons," have been fulfilled.

**661—13.11(17A,80) Renewal of permit.** Each railroad employer of a railway special agent will file with this division Form WP1 or WP2 to renew the weapons permit.

**661—13.12(17A,80) Weapons training.** It is required that each railway special agent receive continuous weapon training and demonstrate necessary proficiency in the use of weapons.

**661—13.13(17A,80) Review of application.** Upon receipt of all material necessary for the appointment of a railway special agent, the division will process the application. All material will be reviewed and maintained in administrative services division headquarters' files. The division will conduct further investigation of the applicant which may include a check of drivers' license and motor vehicle files, criminal history data records and verification of the fact that income tax returns have been filed with the Iowa department of revenue.

**661—13.14(17A,80) Identification card.** After the application is approved, the railroad company will be issued an identification card for the applicant. This card should have affixed one fingerprint and the signature of the applicant. It shall then be returned to the administrative services division for authentication signatures.

**661—13.15(17A,80) Notification.** The railroad company shall notify the administrative services division, within five working days, when any of the following take place:

**13.15(1)** The railway special agent appointed by the department is terminated from employment.

**13.15(2)** The railway special agent has been hospitalized for a long-term illness or is undergoing psychiatric evaluation or treatment.

**13.15(3)** The discharge of any firearm by any railway special agent other than during target practice or hunting. This report shall include the circumstances, the number of shots fired, the type of weapon, the reason for firing and all information concerning any injury to a person or property.

**661—13.16(17A,80) Notice of termination of employment.** A notice of termination of employment shall include the railway special agent's identification card and weapon permit.

These rules are intended to implement Iowa Code section 80.7.

[Filed 6/30/75]

[Filed 6/7/79, Notice 5/2/79—published 6/27/79, effective 8/2/79]

[Filed 4/1/88, Notice 9/23/87—published 4/20/88, effective 5/25/88]

# CHAPTER 14
# PAYMENT OF SMALL CLAIMS

[Prior to 4/20/88, see Public Safety Department[680] Ch 14]

Rescinded IAB 5/23/07, effective 7/1/07; see 661—Chapter 41

# CHAPTER 15
# LAW ENFORCEMENT ADMINISTRATOR'S TELECOMMUNICATIONS ADVISORY COMMITTEE (LEATAC)

[Rules 15.1 to 15.6 appeared as 9.100 to 9.105 prior to 6/27/79]
[Prior to 4/20/88, see Public Safety Department[680] Ch 15]

**661—15.1(693) Establishment of committee.** There is hereby established a law enforcement administrator's telecommunications advisory committee known as LEATAC.

**661—15.2(693) Membership of committee.** The membership of the LEATAC committee shall be comprised of the following members:

**15.2(1)** A member of the department of general services communications division appointed by the director of the department of general services.

**15.2(2)** Two members of the Iowa association of public safety communications officers (APCO) appointed by the president of APCO.

**15.2(3)** Three members of the division of communications, Iowa department of public safety, appointed by the commissioner of public safety.

**15.2(4)** One member of the Iowa criminal and juvenile justice planning agency appointed by the agency's director.

**15.2(5)** One member of the Iowa state policemen's association appointed by the president of the association.

**15.2(6)** One member of the Iowa chiefs of police and peace officers' association appointed by the president of the association.

**15.2(7)** One member representing the disaster services division of the Iowa department of public defense appointed by the administrator of the disaster services division.

**15.2(8)** Two members of the Iowa state sheriffs' and deputies' association appointed by the president of the association.

**15.2(9)** One member representing emergency medical services appointed by the director of public health.

**15.2(10)** One member representing the Iowa department of transportation appointed by the director of the Iowa department of transportation.

**15.2(11)** One member representing the Iowa department of natural resources appointed by the director of the department of natural resources.

**15.2(12)** One member representing the Iowa department of corrections appointed by the director of the department of corrections.

**15.2(13)** The state frequency coordinator shall be an ex officio member.

**661—15.3(693) Terms of appointment.** All members of the committee shall serve until successors are appointed.

If an agency is not represented at three consecutive meetings, the appointing authority for that representative shall be notified in writing by the chairperson. If two more consecutive meetings are held with no one from the agency in question attending, the affected agency representative may be removed from the membership by majority vote of the committee, and the affected position declared vacant.

Whenever a vacancy occurs the commissioner of public safety shall notify, in writing, the appointing authority and request that another member be appointed.

**661—15.4(693) Officers.** The committee shall elect from its own membership a chairperson and a vice chairperson.

**661—15.5(693) Bylaws.** The committee shall adopt its own bylaws for the efficient operation of its business.

**15.5(1)** *Meetings.* Meetings of the committee shall be as called by the commissioner of public safety or the committee chairperson.

*a.* Written notice of all meetings shall be mailed so as to be received by members at least one week prior to the meeting date.

*b.* Special meetings may be called by the commissioner of public safety or committee chairperson or upon the written request of three members of the committee. Notice of special meetings is to be by telephone and personally acknowledged, provided notice is given 72 hours prior to the meeting date.

**15.5(2)** *Duties of chairperson.* It shall be the responsibility of the chairperson to call all meetings; set the agenda for meetings; preside at meetings; appoint subcommittees, when and as required; and carry out general responsibilities of the chairperson.

**15.5(3)** *Quorum.* A quorum shall consist of not less than six members of the committee. A quorum of eight members of the committee will be necessary at any meeting where the agenda includes:

*a.* Establishment of or changes in bylaws.

*b.* Election of officers.

*c.* Enforcement action against any participating department.

**661—15.6(693) Duties.** LEATAC shall be an advisory committee and shall make recommendations to the commissioner of public safety, the legislature and the Iowa criminal and juvenile justice advisory council concerning the following:

**15.6(1)** Changes and revisions to the statewide public safety-law enforcement telecommunications plan.

**15.6(2)** Minimum standards and guidelines for training communications operators.

**15.6(3)** Courses of action to the commissioner of public safety with regard to communications complaints of law enforcement agencies.

**15.6(4)** Procedures for the administration of the state mutual aid frequencies.

**15.6(5)** Legislation, if necessary, to carry out the implementation of the statewide public safety-law enforcement telecommunications plan.

**15.6(6)** Make such other recommendations to the commissioner of public safety as the committee deems necessary in relation to public safety law enforcement communications.

These rules are intended to implement Iowa Code section 693.7.

[Filed 6/19/74; amended 6/30/75]

[Filed 6/7/79, Notice 5/2/79—published 6/27/79, effective 8/2/79]

[Filed 4/1/88, Notice 9/23/87—published 4/20/88, effective 5/25/88]

[Filed 3/14/91, Notice 12/12/90—published 4/3/91, effective 5/15/91]

# CHAPTER 16
# STATE BUILDING CODE—FACTORY-BUILT STRUCTURES

[Transferred from O.P.P., ch 5, See IAB 7/6/83]
[Prior to 4/20/88, see Public Safety Department[680] Ch 16]

**661—16.1** to **16.500** Rescinded IAB 12/21/05, effective 4/1/06. See 661—Chapters 300 and 301.

**661—16.501** to **16.609** Reserved.

## PART 1—MODULAR FACTORY-BUILT STRUCTURES

**661—16.610(103A) "Modular factory-built structures."** Division VI, Part 1, contains the rules and regulations which are to apply to all factory-built structures which are not specifically included in Part 2 of this division.

**16.610(1)** *Authority to promulgate rules.* Provisions contained within all sections of Part 1 are authorized under Iowa Code section 103A.9.

**16.610(2)** *Scope and applicability.* The provisions contained within Part 1 shall apply to the following:

*a.* Plan evaluation, manufacture, inspection, and installation of "modular factory-built structures," of closed-type construction and of open-type construction for those manufacturers who have by option chosen to have their building component, assembly or system considered to be closed construction.

*b.* Approval by the commissioner or the commissioner's designated representative of an organization or person referred to as a third-party agent, or independent inspection agency.

*c.* All "modular factory-built structures" manufactured for installation in Iowa after February 1, 1973.

*d.* Every modular factory-built structure, building, building system, component, assembly or system manufactured for installation in Iowa on or after February 1, 1973, shall bear a seal issued by the commissioner which certifies that the unit complies with the code and that the certificates and approvals required by these rules have been submitted or obtained.

*e.* Every modular factory-built structure, building, building system, component, assembly, or system which was manufactured before February 1, 1973, and which is being installed in Iowa for the first time shall have a seal attached attesting that it complies with the code and that the certificates and approvals have been submitted to the commissioner.

*f.* Modular factory-built structures moved or relocated after the first installation in Iowa shall comply with the applicable codes and zoning restrictions of the jurisdiction into which it is being moved or relocated.

**16.610(3)** *Definitions.* Definitions in Division I of this code also apply to Division VI. These definitions also apply to all parts of Division 6. This subrule covers terms and definitions that are defined for purposes of clarification when used in Division VI.

*"Building."* A combination of materials, whether portable or fixed, to form a structure affording facilities or shelter for persons, animals or property. The word "building" includes any part of a building unless the context clearly requires a different meaning.

*"Building component."* Any part, subsystem, subassembly, or other system designed for use in, or as part of, a structure, including but not limited to: structural, electrical, mechanical, fire protection, or plumbing systems, and including such variations thereof as are specifically permitted by regulation, and which variations are submitted as part of the building system or amendment thereof.

*"Certificate of compliance."* A certification which is filed with the commissioner which indicates that the third-party agency has approved specific models or model groups of factory-built structures as meeting the state building code. (See 16.610(14)*"d"* and 16.610(17).)

*"Closed construction."* Is any structure, building, component, assembly or system manufactured in such a manner that all portions cannot be readily inspected at the installation site without disassembly, damage to, or destruction thereof.

*"Code compliance certificate."* Is the certificate prepared by an approved manufacturer and submitted by the manufacturer for each unit which is to be installed in Iowa and includes an Installation Certificate. (See subrules 16.610(19) and 16.610(20).)

*"Component."* Any part, material or appliance which is built in as an integral part of the factory-built structure during the manufacturing process, or any factory-built system, subsystem or assembly not approved as part of a unit, section, or module.

*"Evaluation or inspection agency."* Is an approved person or organization, private or public, determined by the commissioner to be qualified by reason of facilities, personnel, experience and demonstrated reliability and independence of judgment, to investigate, evaluate and approve factory-built structures or buildings, building components, building systems, and compliance assurance programs.

*"Factory-built structure."* Is any structure, building, component, assembly or system which is of closed construction and which is made or assembled in manufacturing facilities, on or off the building site, for installation or assembly and installation, on the building site. Factory-built structures may also mean, at the option of the manufacturer, any structure or building of open construction, made or assembled in manufacturing facilities away from the building site, for installation, or assembly and installation, on the building site. Factory-built structure also means "factory-built unit."

*"Independence of judgment."* Means not being affiliated with or influenced by or controlled by building manufacturers or producers, suppliers, or vendors of products or equipment used in factory-built structures or buildings and building components in any manner which is likely to affect their capacity to tender reports and findings objectively and without bias.

*"Manufacturer's bill of sale"* means any document, certificate, sales receipt, etc., signed by the manufacturer or importer that the modular factory-built structure described has been transferred to the person or dealer named. The document shall have attached a copy of the 3A section of the Code Compliance Certificate or shall contain at least the make, model year, manufacturer's serial number, Iowa model approval number and the code compliance seal number of the unit.

*"Model or model groups."* One or more manufacturer-designed modular homes which can constitute one model group.

*"Modular."* A general term to describe all factory-built structures which are not manufactured homes, manufactured home add-on units, or temporary field construction offices, as defined in Part 2, at 661—16.620(103A). Modular includes, but is not limited to, panelized units, components, sections and modules.

*"Module."* A unit or a section which is assembled in its final form and transported in such a manner.

*"Open construction."* Is any structure, building, component, assembly or system manufactured in such a manner that all portions can be readily inspected at the installation site without disassembly, damage to, or destruction thereof.

*"Seal"* or *"insignia."* A device or insignia issued to the manufacturer by the commissioner for affixing to a factory-built structure or system evidencing compliance with the code.

*"Section."* A division of a factory-built structure that must be combined with other sections to form a complete structure.

*"Structure."* That which is built or constructed, an edifice or building of any kind, or any piece of work artificially built up or composed of parts joined together in some definite manner except transmission or distribution equipment of public utilities. The word "structure" includes any part of a structure unless the context clearly requires a different meaning.

*"Testing agency."* An organization approved by the commissioner which:

1. Is qualified and equipped for the testing, observation, evaluation, or approval of building components, construction, materials, equipment, or systems as regulated by approved standards;

2. Is not under the jurisdiction, affiliation, influence, or control of any manufacturer or supplier of any industry;

3. Makes available a published report in which specific information is included certifying that the equipment and installations listed or labeled have been tested and found acceptable according to approved standards.

*"Third-party agency."* Is an approved person or organization, private or public, determined by the state building code commissioner to be qualified to act as an evaluation, inspection, testing, or listing agency, as defined in this section.

*"Unit."* A single factory-built structure approved by the state building code commissioner. Units may be combined to form a larger complex structure or may be a combination of sections.

**16.610(4)** *Administration.* This section covers the basic requirements for constructing modular structures and all of the administrative procedures under which the modular program functions including methods of certification approval and manufacturing requirements, inspection and installation.

**16.610(5)** *Modular construction requirements.* All factory-built structures not designated as a manufactured home, manufactured home add-on or a temporary field construction office shall be constructed to the requirements in Division I, Part 4, Division II, Division III, Division IV, or the alternate method of construction as provided for in Division V, Division VII whenever applicable and Division VIII of the state building code.

**16.610(6)** *Modular installation requirements.* All factory-built structures designated as modular units shall be installed according to the manufacturer's approved installation drawings and any additional state-approved requirements. All approvals shall be part of the third-party certification agency approval for their respective manufacturer. In addition, all installations shall comply with local building codes for items not included as part of the state approval and local zoning requirements whenever applicable.

Modular installers shall obtain approval as required by rule 661—16.622(103A).

Modular installation seals shall be obtained and attached upon completion and the installation certificate shall be completed and filed as per subrule 16.610(20).

**16.610(7)** *Procedures for approval.* The method of third-party certification and approval shall be used. The manufacturer shall contract with third-party agencies for third-party approvals and notify the building code commissioner of the intent to manufacture units to be installed in Iowa and the name of the third party or parties to be used.

The third-party agency (or agencies) shall also notify the commissioner that they have entered into a contract to perform services with the manufacturer.

Third-party approvals are required for plan and design approval, plant facilities approval and a continuing inspection of units during manufacture.

The manufacturers shall submit plans to the third-party agency or agencies for review and approval. After the plans, the plant facilities, and an inspection procedure have been approved by the third-party agency or agencies the manufacturer shall submit a compliance certificate on the form supplied by the commissioner for each model or model group. The commissioner will assign an Iowa approval number for those models included in the approval.

At the time of production of units for installation in Iowa the manufacturer shall obtain from the commissioner Iowa insignia seals for manufacture and installation, to be attached to the units at the time of manufacture and installation, as well as code compliance and installation certificates.

**16.610(8)** *Requirements and procedures for obtaining third-party agency approval.*

*a.* The commissioner or the commissioner's designated representative shall be responsible for approving any person, state or organization who submits an application to the commissioner for approval and whose application is accompanied by written material evidencing that said agency is:

1. Capable of discharging without bias the responsibilities assigned by these regulations.
2. Not under the jurisdiction or control of any manufacturer or supplier of any industry.
3. Professionally competent with independence of judgment to perform the function for which commissioned.
4. Qualified to submit all findings regarding code compliance in a detailed report to the commissioner.
5. Willing to be inspected and reviewed by the commissioner for all phases of work.

*b.* The commissioner, in considering the information supplied with the application for approval, may limit the agencies' approval to particular types of factory-built structures, buildings, building systems, components, assemblies or systems.

*c.* Other states wishing to exercise application with this state in order to act in the capacity of an approved third-party agency, may do so provided that:

1. The state laws for issuing seals or insignia for code compliance are equally effective as those specified in this code.
2. The conditions in "1" are enforced in their state.
3. Other states agree to monitoring of this reciprocal agreement by representatives of this state assigned by the commissioner.
4. Violations of any condition as part of the reciprocal agreement may be deemed just cause for revocation or suspension of this agreement by the commissioner.

**16.610(9)** *Third-party agency responsibilities.*

*a.* Evidence of approval by the state must be on file at each manufacturing facility.

*b.* Notify the commissioner when they have contracted with a manufacturer to serve as their third-party agency.

*c.* Manufacturer plans and specifications must be approved by the third-party agency.

*d.* File of all plans and documents must be maintained at each manufacturing facility and in the third-party agency office.

*e.* Send a report to the commissioner stating that the plans and specifications are in compliance with the Iowa state building code.

1. Plans and specifications are not necessary for submittal with this report.
2. A list of approved models for each manufacturing facility.
3. Verify that all engineering documents have been signed by a registered engineer or architect.
4. Update the report as necessary.
5. Indicate approval of installation procedures for all of these structures as well as the personnel who will be doing the installation. However, installation of factory-built structures shall be, in addition to provisions of this code, in accordance with any local ordinances which apply. (That is, those construction processes which are not included as part of the state approval.)

*f.* Notify the manufacturer of plans and specifications approval including model numbers for use in preparing certificates of compliance.

*g.* Inspect manufacturing facilities and review or establish a quality control program and test procedure.

*h.* Notify the manufacturer of facilities approval for use in preparing certificates of compliance.

*i.* Prepare an inspection manual to be used by the third-party inspectors and the commissioner. This manual shall be on file at each manufacturing facility.

*j.* Report to the state outlining in-plant procedures and include a typical inspection checkoff sheet.

*k.* Notify the manufacturer when in-plant inspection program is in force for use in preparing certificates of compliance.

*l.* Report each quarter to the state for each manufacturer and submit information as follows:

1. Account for all Iowa seals used by each manufacturer during the quarter.
2. Manufacturer's serial number and model number.
3. Third-party seal number.
4. Iowa seal number.
5. The portion of the unit which was actually inspected during an in-plant inspection.

**16.610(10)** *Third-party agency documentation and plan verification.* The third-party agency will be responsible for the investigation, evaluation, review of test results, of plans and documents, and each revision thereto submitted to the agency by the manufacturer with which it has a contract for compliance with applicable requirements set forth in this code. Such a review shall include but not be limited to:

*a.* All documentations and plans shall indicate the manufacturer's name, office address, and manufacturing facility address.

*b.* Manufacturer's plans shall show all elements relating to specific systems on drawings properly identifiable.

*c.* Each plan which contains material requiring engineering evaluation shall bear the signature and seal of a registered architect or engineer.

*d.* The plans shall also indicate the method of evaluation and inspection for all required on-site testing of each system.

*e.* Plans shall designate all work to be performed on site, including all system connections, equipment and appliances and all work performed within the plant.

*f.* Space shall be provided on all sheets of plans near the title box for the approved stamp.

*g.* Individual system design or any structural design or method of construction and data shall be in accordance with the Iowa state building code. Plumbing, electrical, heating and mechanical systems constitute individual system designs.

*h.* Grade, quality, and identification of all materials shall be specified.

*i.* Design calculations and test reports shall be submitted when specified or required.

*j.* Plans shall be drawn to scale.

*k.* Plans shall indicate the location of the approved seal and data plate locations.

*l.* Copies of approved plans showing third-party agency approval shall be on file at each manufacturing facility or made readily available.

*m.* Review and approval of all installation procedures must conform to the following:

1. Crews performing installation which are under the jurisdiction of the unit manufacturer or the manufacturer's designee, are approved as competent by the authorized third-party agency.

2. Copies of the installation manual must be available during installation for use by the commissioner or the commissioner's representative or by the local building official.

**16.610(11)** *Third-party agency plant investigation for quality control.* All manufacturing facilities shall be inspected to the performance objectives as stated in the Iowa state building code. These include as follows:

*a.* Review of the manufacturer's quality control manuals or establishing a quality control procedure to ensure code compliance.

*b.* Implementation of inspection and test procedures which will control the quality of fabrication and workmanship.

*c.* Making a complete report to the commissioner that includes certification of all manufacturing procedures.

**16.610(12)** *Third-party agency in-plant inspections.* To ensure compliance with the approved specifications and plans and the Iowa state building code and in conjunction with monitoring each manufacturer's quality control program, every approved third-party agency shall:

*a.* Maintain a record of inspections and such records shall be reported to the commissioner every quarter and include the seal report.

*b.* Witness and verify all required testing in accordance with the quality control manual.

*c.* Certify that all seals are being attached as required and only after each unit meets the code requirements.

*d.* Prepare a detailed inspection manual that specifies the third-party agency procedures in making the required inspections and have this manual available for use by the commissioner or the commissioner's representative when periodic monitoring is performed.

*e.* One hundred percent inspection is not required, however some part of every unit is required to be inspected. A complete inspection of a typical structural, plumbing, heating and electrical system shall be made each visit to the manufacturing facility.

**16.610(13)** *Reapproval of third-party agencies.* Any agency approved by the commissioner or the commissioner's designated representative must file for reapproval annually. Such application for reapproval may be filed at any time from the forty-fifth day prior to the scheduled annual expiration date of the current approval. The applying third-party agency seeking reapproval shall completely and accurately furnish all pertinent information as is necessary to make current the information previously submitted to the commissioner or the commissioner's representative as part of its original application for approval and all subsequent applications for reapproval. The application for reapproval shall then become a permanent record of the department administering the provisions of the code. Should there be no change in the status of the applying agency from its original application for approval, an affidavit to that effect shall suffice for consideration of approval.

**16.610(14)** *Requirements and procedures for modular manufacturers.*

*a.* Every manufacturer shall be responsible for all corrective actions required and the contractual agreement that each has with the approved third-party agency shall not diminish this responsibility.

*b.* Every manufacturer shall notify the building code commissioner that the manufacturer's facility desires to construct units which are to be installed in the state of Iowa.

*c.* Every manufacturer shall contract with an approved third-party agency to perform all duties listed in 5.610(9), 5.610(10), 5.610(11), and 5.610(12). The commissioner will furnish a list of approved third-party agencies upon request.

*d.* Every manufacturer shall file certificates of compliance with the commissioner for each model or model group, after all third-party reviews are completed. Whenever additional models or changes are proposed, the manufacturer shall file additional certificates of compliance or request that additions be made to existing model lists.

*e.* Every manufacturer shall notify the commissioner in writing within 60 days after the effective date of this code, the current Iowa approval(s) number that the manufacturer has been assigned and the models which will be manufactured to these standards. Approvals which have not been reaffirmed within this 60-day period shall be considered to be canceled.

*f.* Every manufacturer shall purchase Iowa seals from the office of the commissioner in accordance with requirements of 5.610(22).

*g.* All units or sections shall have seals if manufactured after February 1, 1973, and if they are to be installed in Iowa. Regardless of manufactured date, all units being installed in Iowa for the first time shall have a seal attached.

*h.* Every manufacturer shall complete and furnish compliance certificates and installation certificates in accordance with the requirements of 16.610(19) and 16.610(20).

**16.610(15)** *Manufacturer's data plate for modular units.* The following information shall be placed directly or by reference on one or more permanent manufacturer's data plates in the vicinity of the electrical distribution panel box or in some other designated location that is readily accessible for inspection.

*a.* Manufacturer's name and address.

*b.* Serial number of the structure or unit.

*c.* Model designation and name of each of the manufacturers of major factory-installed appliances.

*d.* Wherever applicable, identification of permissible type of gas for appliance and direction for water and drain connections.

*e.* Name and date of the standards complied with in construction of this structure or unit.

*f.* The seal serial number.

*g.* Design loads and special conditions or limitations.

*h.* Date of manufacture.

*i.* Electrical ratings. Instructions and warnings on voltage, phase size and connections of units and grounding requirements.

**16.610(16)** *Changes and alterations to factory-built structures.*

*a.* Changes to approved plans, drawings or installation instructions proposed by the manufacturer or third-party agency are to be requested in writing and submitted to the building code commissioner. All work being performed in the manufacturing plant that is affected by these changes will not proceed until written approval is received from the commissioner. Where these changes do not affect code compliance, then approval is permitted when changes are authorized through the third-party agency and said changes are then incorporated into the design documents.

*b.* The commissioner shall notify the manufacturer and the third-party agency of all amendments, deletions or additions to the code provisions and the commissioner shall allow the manufacturer a reasonable time frame in which to submit a request for a change in plan approval, if required, in order to conform to the code change.

*c.* Basic changes in manufacturing facility locations, company name or address changes, and changes resulting in companies changing ownership or dissolving their business are all to be reported

promptly to the commissioner, in writing, generally within a two-week period after said change was made. The manufacturer shall also notify the third-party agency of said changes.

*d.* Alterations to factory-built structures pursuant to the construction, plumbing, heat producing, electrical equipment or installation or fire safety in a unit after an Iowa seal has been affixed are all considered to be subject to the same requirements that exist for any structure within the local jurisdiction.

*e.* The following shall not constitute an alteration to a factory-built structure.

(1) Any repairs to approved component parts.

(2) Conversion of listed fuel-burning appliances in accordance with the terms of their listing.

(3) Adjustment and maintenance of equipment installed in the factory-built structure.

(4) Replacement of equipment in kind.

**16.610(17)** *Certificate of compliance.* The manufacturer shall provide the building code commissioner with a certificate of compliance for each model or model group of the approved modular design. This certification shall be on a copy of Form ISBC-3 and shall include the following:

*a.* Model or model group number which will appear on the data plate and compliance certificate.

*b.* The signature of an authorized representative of the manufacturer.

*c.* The name of the third-party agency certifying compliance with the code, for each of the three certifications.

*d.* Evidence of code compliance certified by the third-party agencies, for the specific model or model group being submitted.

*e.* The type of Iowa seal and prefix letters which will be attached to the modular structure.

**16.610(18)** *Limitations.* For all types of structures other than one- and two-family dwellings, there shall be, with the certificate of compliance, an attached statement which sets out the limitations of the structure based on site conditions, type of construction, area, and height limitations. A statement to the effect that the structure should not be used except where it meets these conditions will not be acceptable.

**16.610(19)** *Code compliance certificates.* Each manufacturer will be provided with a combination code compliance and installation certificate by the building code commissioner when seals are purchased as per subrule 16.610(22). The manufacturer shall complete this form and distribute it as follows:

*a.* Copy 1A is returned to:

State Building Code Bureau
Department of Public Safety
Wallace State Office Building
Des Moines, Iowa 50319

*b.* Copy 2A is retained for plant records and to be used to make additional copies if necessary. An additional copy shall accompany other shipping documents carried by the transporter and be available for inspection by any authorized official or department.

*c.* The remainder of the compliance certificate is forwarded to the dealer, distributor, or any other person who is to obtain a local building permit, or oversee installation.

**16.610(20)** *Installation certificates.* The installation certificate portion of the supplied combination certificate (see 16.610(19)) shall be partially completed by the manufacturer at the same time the code compliance certificate is prepared and made part of the documents shipped with the unit and completed by the local building official or the installer.

*a.* When a building permit is required, Forms 1B, 3A, and 3B are presented to the local building official at the time application is made for a permit. The building official shall sign Forms 1B and 3B and forward Form 1B to the commissioner at the address designated in this section.

*b.* When a building permit is not required, Forms 1B and 3B are signed by the installer and forwarded to the commissioner at the address designated in this section.

**16.610(21)** *Certification seals.* There shall be two seals attached to every factory-built structure which is installed in Iowa.

*a.* Every module, unit, section, or component shall have a state seal securely affixed at the manufacturing facility to show that the manufactured unit is in compliance with the code. When components and systems are included within a module, section or unit and have been approved by the third-party agency to be part of that module, section or unit, only one seal is required for the module,

section, or unit. A series of panels which make up the final unit when assembled at the site, and where approved in that manner, require only one seal.

*b.* Every completed unit when installed at the final site shall have an installation seal attached to show that the installation is in compliance with the requirements of this code.

**16.610(22)** *Seal issuance.* The state seal shall be issued by the state building code commissioner upon application and after approval of the plans and manufacturing procedures have been certified by the third-party agency evidencing compliance with this code. Applications for seals shall be made to the commissioner on the supplied form and include the following:

*a.* Number of seals requested for each type of seal and the letter prefix when required.

*b.* Iowa model or system approval numbers and third-party agency or agencies included.

*c.* Reference to manufacturing procedures approval and third-party agency or agencies involved.

*d.* A statement by the applicant that consent is given for inspection and investigation by the state at all reasonable hours.

*e.* The seal fees.

**16.610(23)** *Seal types and prefixes.* When ordering seals the manufacturer shall indicate the number of each type of seal requested and the letter prefixes required. MOD type seals shall be attached to all modular units which are as constructed to provisions of Division VI, subrule 16.610(5). Prefix letters (A, B, C, D, etc.) shall be required on seals for all multiple-sectioned structures and the seal numbers shall be identical except for the prefix letters. Prefix letters are not required for single-unit structures.

**16.610(24)** *Seal placement on modular units.* Every seal shall be assigned and securely affixed to a specific section or unit. Assigned seals are not transferable and are void when not affixed as assigned and all such seals shall be returned to or may be confiscated by the commissioner. The seal shall remain the property of the commissioner in the event of violation of the conditions of approval. Every seal shall be placed and affixed to each section or unit in a readily visible location.

**16.610(25)** *Denial and repossession of seals.* Should investigation or inspection reveal that a manufacturer is not constructing modular units in accordance with the plans approved by the third-party agency, and such manufacturer, after having been served with a notice setting forth in what respect the provisions of these rules and the code have been violated, continues to manufacture units in violation of these rules and the code, applications for new seals shall be denied and the seals previously issued shall be confiscated. Upon satisfactory proof of compliance such manufacturer may resubmit an application for seals.

**16.610(26)** *Seal removal.* In the event that any unit bearing the seal is found to be in violation of the code, the commissioner may remove the seal (after furnishing the owner or the owner's agent with a written statement of such violations). No new seals shall be issued until proof of corrections has been submitted to the commissioner.

**16.610(27)** *Lost or damaged seals.* When or if a seal has been lost or damaged, the commissioner shall be notified immediately in writing by the manufacturer. The manufacturer shall identify the unit serial number, and when possible, the seal number.

*a.* All seals that are damaged shall be promptly returned to the commissioner.

*b.* Lost and damaged seals shall be replaced by the commissioner with a new seal upon payment of the seal fee as provided in this section.

**16.610(28)** *Return of seals.* When a manufacturer discontinues production of a unit carrying plan approval, the manufacturer shall within ten days advise the commissioner of the date of such discontinuance and either return all seals allocated for such discontinued unit or assign said seals to other approved units.

**16.610(29)** *Fees.*

*a.* *Form of remittance.* All remittances shall be:

1. In the form of checks or money orders.
2. Payable to: Treasurer, State of Iowa.
3. Addressed to:

State Building Code Bureau
Department of Public Safety

Wallace State Office Building
Des Moines, Iowa 50319

*b.* *Seal fees.*

| | | |
|---|---|---|
| 1. | Modular code compliance seals | |
| | No prefix or "A" prefix | $30.00 per seal |
| | B,C,D,E, etc. prefixes | $10.00 per seal |
| | Replacements | $10.00 per seal |
| 2. | Modular installation seals | $15.00 per seal |
| | Replacement seals | $ 7.50 per seal |

*c.* *Other fees.* For all other services furnished by the commissioner which are not direct administrative duties of the commissioner's office, such as, but not limited to: obtaining consultants for review and evaluation of approval applications, or obtaining reviews from the national code writing organizations, a fee equal to the direct expense shall be charged.

**16.610(30)** *Local issuance of building permits.*

*a.* The issuance of building permits and occupancy permits shall be in accordance with local ordinances and Iowa Code sections 103A.19 and 103A.20.

*b.* Local building codes and regulations shall apply to all parts of any project which are not included in the state approval of either the manufactured structure or the installation procedure.

*c.* Nothing in these rules or the state building code exempts any factory-built structure from the requirements of local zoning or site condition requirements.

**16.610(31)** *Noncompliance to code provisions.* Any noncompliance or unauthorized deviation with the provisions of this code from the approved plans or production procedures shall be just cause for the revocation of the plan approval and the return of the seals.

**661—16.611** to **16.619** Reserved.

PART 2—MANUFACTURED HOUSING

**661—16.620(103A) Manufactured home construction.** (Previously called mobile home.)

**16.620(1)** *Authority to promulgate rules.* Pursuant to Public Law 93-383, Section 604, of the National Manufactured Home Construction and Safety Act of 1974, specified in 42 U.S.C. 5403 and signed into law on August 22, 1974, the authority to promulgate rules and regulations in order to establish federal manufactured home construction standards and procedures of enforcement were established by Congress and subsequent provisions for their implementation were so granted to the United States Department of Housing and Urban Development (HUD). Title VI of this Act authorizes the secretary of HUD to promulgate the federal standards and to issue the rules and regulations to ensure adequate administration and enforcement of such standards.

**16.620(2)** *Scope and applicability.*

*a.* Provisions contained within Part 2 shall apply to all factory-built structures defined as a "manufactured home" in subrule 16.620(4) of Part 2. These regulations shall govern manufactured homes that enter the first stage of production on or after June 15, 1976, and manufactured homes that entered the first stage of production prior to June 15, 1976, to which HUD (Department of Housing and Urban Development) labels were affixed. These provisions supersede all local, state, or other governmental regulations for manufactured home standards and are applicable for every manufactured home unit newly manufactured and offered for sale in the United States and its governing territories. These provisions do not apply to the following:

(1) Factory-built structures which comply with the requirements of Division VI, Part 1 of the state building code.

(2) Manufactured homes manufactured for installation in the state of Iowa on or after February 1, 1973, and prior to June 15, 1976.

*b.* Construction of multifamily manufactured homes, manufactured home add-on units, and temporary field construction offices will be covered by the provisions of Division VI, Part 2, however, the administration and the enforcement of the rules and regulations will apply as specified in Division VI, Part 1 for modular structures. These units will not bear a seal issued by the Department of Housing and Urban Development, but will bear an Iowa seal and be governed by all seal provisions outlined accordingly in Division VI, Part 1.

**16.620(3)** *Manufacture of units prior to June 15, 1976.* Manufactured home units, add-on units, multifamily manufactured homes and temporary field construction offices that were manufactured for installation in Iowa prior to June 15, 1976, which established the effective date of the HUD standard, shall have been constructed to the standards of manufactured homes of the Iowa state building code which was in effect at the time of manufacture.

**16.620(4)** *Definitions and terms.* Terms and definitions for purposes of clarification when used in Part 2. (See also subrule 16.610(3).)

*"Anchoring equipment."* Straps, cables, turnbuckles, clamps, clips, and other fasteners including tensioning devices, which are used with ties to secure a manufactured home to ground anchors.

*"Anchoring system."* A combination of ties, anchoring equipment, and ground anchors that will, when properly designed and installed, resist overturning and lateral movement of the manufactured home from wind forces.

*"Approved installer."* Approval by the commissioner or the commissioner's designated representative of a person, dealer, agency or organization, qualified to inspect, or install ground anchoring and support systems for manufactured homes or other manufactured structures, who installs units, for others, at a site of occupancy by attaching support and anchoring systems, and is familiar with and has agreed to comply with these installation procedures.

*"Certificate, installation."* The certificate provided by the installer to both the commissioner and the owner which warrants that the installation system complies with these rules. When an installer installs only the support system or anchorage system, an installation certificate shall also be completed and copies distributed accordingly for each installation and with the applicable information completed on the certificate pertinent to that type of installation (see subrule 16.623(5)).

*"DAPIA."* A design inspection agency approved by HUD to perform in-plant design reviews on all drawings and specifications in order to provide compliance to the HUD standard for manufactured home construction.

*"Diagonal tie (frame tie)."* A tie intended primarily to resist horizontal or shear forces and which may secondarily resist vertical, uplift, and overturning forces.

*"Ground anchor."* Any device at the manufactured home site designed to transfer manufactured home anchoring loads to the ground.

*"IPIA."* A production inspection agency approved by HUD to perform the in-plant quality assurance inspection programs within manufactured home manufacturing facilities.

*"Label or certification label."* The approved form of certification by the manufacturer that is affixed to each transportable section of each manufactured home manufactured for sale to a purchaser in the United States or its governing territories.

*"Main frame" (Chassis).* The structural component on which is mounted the body of the manufactured home.

*"Manufactured home."* (Previously called mobile home.) A structure transportable in one or more sections which when erected on site measures 8 body feet or more in width and 40 body feet or more in length or when erected on site is 320 or more square feet in area, and which is built on a permanent chassis and designed to be used as a dwelling unit with or without a permanent foundation when connected to the required utilities and includes the plumbing, heating, air conditioning and electrical systems contained therein.

*"Manufactured home add-on."* A structure which is designed and produced and to be made an integral part of a manufactured home and will be considered part of the manufactured home, when attached thereto.

*"Manufacturer's statement of origin"* means a certification signed by the manufacturer or importer that the manufactured home described has been transferred to the person or dealer named and that the transfer is the first transfer of the manufactured home in ordinary trade and commerce. In addition to the information required by the Iowa Department of Transportation definition 761—subrule 421.1(2), the label number required by the federal regulations Section 3282.362(c)(2) 24 CFR Chapter XX shall be included. (This number is commonly known as the HUD number.) The terms "manufacturer's certificate," "importer's certificate," "MSO" and "MCO" shall be synonymous with the term "manufacturer's statement of origin."

*"Multifamily manufactured home."* Manufactured homes designed and manufactured with more than one living unit.

*"Pier."* That portion of the support system between the pier foundation and the manufactured home exclusive of caps and shims.

*"Pier foundation (footing)."* That portion of the support system that transmits loads directly to the soil, and shall be sized to support the loads shown herein.

*"SAA."* A state administrative agency approved by the Department of Housing and Urban Development to participate in the enforcement of all provisions to which a manufactured home is regulated under the HUD standard.

*"Seal, installation."* Is an insignia issued by the commissioner which is attached to a manufactured home by the installer to certify that the installation is in compliance with the requirements of the state building code.

*"Stabilizing system (tie-down system)."* A combination of the anchoring system and the support system when properly installed. Therefore, components of the anchoring and support systems such as piers, pier foundations, ties, anchoring equipment, anchors, or any other equipment which supports or secures the manufactured home to the ground, shall be defined as stabilizing devices. For the purposes of this code the definition of a stabilizing system and the definition of a tie-down system shall be one and the same.

*"Support system."* A combination of pier foundations, piers, caps, and shims that will, when properly installed, support the manufactured home.

*"Temporary field construction office."* A factory-built structure used at a construction site as an office facility by the personnel engaged in the construction of another structure or project. The intent of this structure is to remain on the job site only as long as necessary during the construction and then be removed before construction is completed.

*"Tie."* Strap, cable or securing device used to connect the manufactured home to ground anchors.

*"Tie-down system (stabilizing system)."* Means a ground support system and a ground anchoring system used in concert to provide anchoring and support for a manufactured home.

*"Vertical tie (over-the-top)."* A tie intended to resist the uplifting and overturning forces. This tie may continue over-the-top but if properly attached may only extend partway up each side.

**16.620(5)** *Administration.* This section covers the basic requirements for constructing manufactured homes and all of the administrative procedures under which the manufactured home program functions including information pursuant to certification, approval and manufacturing requirements. This section also applies to those structures defined in subrule 16.620(4) of Part 2 as manufactured home add-on units, temporary field construction offices and multifamily homes. There are also included within Part 2, (661—16.621(103A)) sections dealing with installation procedures and information pursuant to the handling of consumer complaints (16.620(15)) consistent with the duties of the state of Iowa to be performed as a State Administrative Agency (SAA) in conjunction with the manufactured home program.

**16.620(6)** *Manufactured home construction requirements.* All factory-built structures that are defined as a manufactured home under subrule 16.620(4) of Part 2, shall be constructed to the standards as promulgated by the United States Department of Housing and Urban Development hereafter referred to as HUD. These standards were published as final rules in the December 18, 1975, issue of the

Federal Register, Volume 40, No. 244, and will be amended from time to time. These standards are herein adopted and apply to all manufactured homes manufactured after June 15, 1976. All provisions for manufactured home procedural and enforcement regulations are covered within the May 13, 1976, Federal Register, Volume 41, No. 94. All factory-built structures defined as a manufactured home by the federal standard shall be manufactured and so regulated by these documents.

**16.620(7)** *Procedures of approval for manufactured homes.* Every manufactured home unit or structure approval will follow the method of third-party certification approval with all approvals obtained through the HUD secretary. All manufactured home plans, specifications, documentation, plant facilities and in-plant inspections must be submitted to and approved by a third-party certification agency so designated by the HUD secretary. Rules and regulations pursuant to these procedures are outlined in the manufactured home procedural and enforcement regulations, Parts 3282.201 through 3282.204 which set out requirements to be met by states or private organizations which wish to qualify as primary inspection agencies (see subrule 16.620(4) of Part 2 definitions for IPIA and DAPIA).

**16.620(8)** *Compliance certification.* Every manufactured home unit or structure must conform to the certification requirements within section 3282.205 of the manufactured home procedural enforcement regulatory document.

**16.620(9)** *Certification seals (labels) and other seal requirements.* Every manufactured home unit or structure must conform to the requirements within the manufactured home procedural and enforcement regulatory document section 3282.362(c)(2) in lieu of Iowa insignias. Other types of units manufactured under the requirements of Division VI, Part 2, will be labeled as prescribed in subrules 16.620(10), 16.620(11) and 16.620(12).

**16.620(10)** *Manufactured home add-on units.* Every factory-built structure manufactured as a manufactured home add-on unit as defined in subrule 16.620(4) of Part 2 shall be constructed to the standards set forth in subrule 16.620(6) of Part 2 except that these units will bear an Iowa seal in accordance with the provisions of the Iowa state building code, Division VI, Part 1. Manufacturers of manufactured home add-on units with the exception of constructing to the HUD standard, which has been herein adopted for these units, must comply with all other provisions of the Iowa state building code as described within Division VI, Part 1, for the factory-built structures.

**16.620(11)** *Multifamily homes.* Every factory-built structure manufactured as a multifamily home within the definition contained in subrule 16.620(4) of Part 2 shall be constructed to the standards set forth in subrule 16.620(6) of Part 2 except that these units will bear an Iowa seal in accordance with the provisions of the Iowa state building code, Division VI, Part 1. Manufacturers of multifamily homes, with the exception of constructing units to the HUD standard which has herein been adopted for these units, must comply with all other provisions of the Iowa state building code as described within Division VI, Part 1, factory-built structures.

**16.620(12)** *Temporary field construction offices.* Every factory-built structure manufactured as a temporary field construction office within the definition as contained in subrule 16.620(4) of Part 2 shall be constructed to the standards set forth in subrule 16.620(6) of Part 2 except that these units will bear an Iowa seal in accordance with the provisions of the Iowa state building code, Division VI, Part 1. Manufacturers of temporary field construction offices, with the exception of constructing units to the HUD standard which has herein been adopted for these units, must comply with all other provisions of the Iowa state building code as described within Division VI, Part 1, factory-built structures.

**16.620(13)** *Seal types for manufactured home add-on units, temporary field construction offices and multifamily homes.* When ordering seals for manufactured home add-on units, temporary field construction offices or multifamily manufactured homes, each manufacturer will indicate the number of each type of seal requested and the letter prefix required. Examples of seals issued are as follows: (A00-0000MH), (B00-0000MH), C, D, and E, etc. Single units are without prefix letters (00-0000MH). For more details, see Division VI, Part 1, subrule 16.610(21).

It is noted that manufactured home type seals shall be attached to all of these type units. All other procedures for seal issuance, removal, damage, repossession and return are to conform with provisions of this code as outlined in Division VI, Part 1.

**16.620(14)** *Noncompliance.* Failure to conform to the provisions of Part 2 as they apply to the federal standard for the construction of manufactured homes is subject to the penalties where applicable as set forth within Division VI, Part 1. The state of Iowa having adopted the federal standard and the enforcement regulations shall participate in the federal program as an agent of HUD thereby providing assurances to ensure code compliance when these units are offered for sale for subsequent installation within the state of Iowa.

**16.620(15)** *Consumer complaints.* The state building code bureau serving as an approved State Administrative Agency (SAA) for the Federal Department of Housing and Urban Development shall receive complaints and process them in accordance with the requirements of the federal regulations as outlined in subpart I, paragraph 3282.401, entitled, "Consumer Complaint Handling and Remedial Actions of the Manufactured Home Procedural and Enforcement Document." These specific complaints are categorized as possible imminent safety hazards or possible failures to conform to the federal standard. Imminent safety hazards shall be those items that could result in an unreasonable risk of injury or death to the occupants of the manufactured homes. Failures to conform to the federal standard are those items that do not result in an unreasonable risk of injury or death to the occupants of manufactured homes, but nevertheless do not meet the provisions of the federal standard in some specific manner.

**661—16.621(103A) Installation of manufactured homes.**

**16.621(1)** *Authority.* These rules and regulations are to establish minimum requirements for the installation of manufactured homes as authorized by Iowa Code section 103A.7, subsection 3, section 103A.9, and sections 103A.30 to 103A.33.

**16.621(2)** *Application.*

*a.* These rules apply to the initial installation of manufactured homes manufactured on or after February 1, 1973, and to factory-built structures manufactured homes before February 1, 1973, which have never been installed in Iowa, and are approved by the commissioner.

*b.* These rules apply to all manufactured homes, new or used, which are sold in Iowa or sold to be installed in Iowa after September 1, 1977, for new manufactured homes and January 1, 1978, for used manufactured homes. The seller shall provide an approved tie-down system and the purchaser shall install or have the system installed within 150 days (see subrule 16.620(4) for the definition of a tie-down system). The 150-day period is designated for time to complete the installation when climatic conditions may restrict the completion of the tie-down system.

*c.* These rules apply to the installation of manufactured home add-on units, temporary field construction offices and manufactured multifamily homes.

*d.* These rules shall apply to any person doing any work on any part of the tie-down system (both support or anchorage systems) whether the unit is being sold or not.

**16.621(3)** *Enforcement.* The commissioner shall administer and enforce these provisions. Any person, agent, or organization approved and authorized by the commissioner may inspect any installation system and equipment to ensure compliance with these regulations. Evidence of compliance shall be supported by the submission to the commissioner of a certificate of installation. One copy of such certificate will remain in possession of the owner of the installed structure.

**16.621(4)** *Manufactured home installation instructions.* Every manufactured home manufacturer which manufactures manufactured homes for installation in Iowa shall provide the commissioner with a reproducible copy of printed instructions of installation for each specific make and model of manufactured home which is to be installed in Iowa. These instructions shall include copies of the materials which have been certified by a registered professional engineer for compliance with the federal manufactured home construction standards and 3280.306(a)(2), 3280.306(b), and 3280.303(c) of the regulatory standards. The manufacturer's installation instructions shall also be available at the installation site.

**16.621(5)** *Approvals and procedures.* Requirements for approval of installers, support and anchorage systems, seals and certificates are described in the remaining sections of this part.

**661—16.622(103A) Certification of manufactured home installers.** Rescinded IAB 7/2/08, effective 7/1/08.

**661—16.623(103A) Installation seal and certificate procedures for manufactured homes.**

**16.623(1)** *Application for seals.* Any installer who has met the applicable requirements of 661—Chapter 374 may apply for installation seals as needed. Such seals may be obtained from the commissioner or local building officials or building department who is a participant in the state's installation program.

**16.623(2)** *Manufactured home installation certificates.* The installer of manufactured homes shall supply the building code commissioner and the owner of the unit with the signed and completed installation certificate which has been issued by the Iowa building code commissioner, within 30 days of affixing the Iowa installation seal.

**16.623(3)** *Obtaining installation certificates.* Any person who installs a tie-down system or any portion thereof shall be supplied with the installation certificate forms when ordering installation seals and the payment of the appropriate fee.

*a.* Installers who are not listed as an installer shall be supplied the proper form to be attached to the copy of the installation certificate to be filed with the commissioner, which will record compliance with the approved system.

*b.* Reserved.

**16.623(4)** *Placement of installation seal.* The installation seal shall be placed in a readily visible location on the rear of the unit. Those units manufactured after June 15, 1976, shall have the installation seal placed adjacent to the federal (HUD) label. Those units manufactured before June 15, 1976, shall have the installation seal placed at the left rear corner above any skirting.

Multiple width units require only one seal for the completed installation. Additions which are added after the initial installation shall have an installation seal on that portion.

**16.623(5)** *Denial and repossession of installation seals.* Should investigation or inspection reveal that an approved installer has not installed an anchoring system, support system, or the complete tie-down system according to these rules and the code, the commissioner may deny such installer's application for new installation seals and any installation seals previously issued shall be confiscated. Upon satisfactory proof of modification of such installation bringing them into compliance, such dealer or installer may resubmit an application for installation seals.

**16.623(6)** *Seal removal, installation.* Should a violation of the rules regarding installation be found, the commissioner may remove the installation seal after furnishing the owner or a designated agent with a written statement of such violation. The commissioner shall not issue a new installation seal until corrections have been made and the owner or a designated agent has requested an inspection pursuant to 16.625(1).

**16.623(7)** *Lost or damaged seals, installation.* When an installation seal is lost or damaged, the commissioner shall be notified in writing. Damaged or lost installation seals shall be replaced by the commissioner upon payment of the replacement installation seal fee as provided in rule 661—322.20(103A).

**16.623(8)** *Return of seals, installation.* When a dealer or installer discontinues the installation of manufactured homes, the dealer or installer shall notify the commissioner within ten days of the date of such discontinuance and return all unused installation seals which have been issued to the dealer or installer. Installation seals may not be transferred by any dealer or installer after being issued to that dealer or installer.

**16.623(9)** *Seals for existing manufactured homes.* Seals may be obtained for existing manufactured homes that are tied down in accordance with the requirements of rule 661—16.627(103A).

**661—16.624** Reserved.

**661—16.625(103A) Inspections and fee structure.** Rescinded IAB 7/2/08, effective 7/1/08.

**661—16.626(103A) Support and anchorage of manufactured homes.** Rescinded IAB 7/2/08, effective 7/1/08.

**661—16.627(103A) Approval of existing manufactured home tie-down systems.** This rule is to provide a method by which manufactured homes which have been installed prior to August 12, 1983, can be sold without requiring a new tie-down system to be installed and to allow existing manufactured homes which are properly supported and anchored to be sold without installing new support and anchorage systems.

**16.627(1)** *Sale of a certified unit.*

*a.* The commissioner shall be notified in writing by the seller of the change of ownership when any manufactured home sold after August 12, 1983, remains in the same location. The installation seal shall remain in place and a copy of the installation certificate shall be supplied to the new owner. Replacement seals and certificates may be obtained if necessary (see subrule 16.623(9)).

*b.* A certified manufactured home sold after August 12, 1983, which is moved to a new location must obtain a new certificate and seal. However, the existing support and anchorage system may be used if the installer verifies the conditions of use and the installation procedures of the existing systems are met at the new location.

**16.627(2)** *Sale or acceptance of installed existing units as an owner's option.* Application may be made to the commissioner for approval of an existing manufactured home support and anchor system on one of the following conditions:

*a.* If the support and anchorage systems were installed by an approved installer and are approved systems.

*b.* If the existing support and anchorage system has been inspected by an approved installer and the installer attests by signing the installation certificate that to the best of the installer's knowledge, the existing systems are equal to or better than the minimum requirements of this code.

*c.* If the existing support and anchorage systems are inspected and approved by a registered engineer or architect, and attested to in writing.

*d.* If the existing support and anchorage systems are inspected by a field inspector with the Iowa state building code and the existing systems are found to be equal to or better than the minimum requirements of this code.

If compliance is met by one of the above procedures and payment of the required fee has been paid, an Iowa installation seal and certificate may then be issued.

**661—16.628(103A) Procedure for governmental subdivisions for installation of factory-built structures.** Any governmental subdivision which has adopted the state building code or any other building code is required to enforce the state building code requirements for the installation of factory-built structures (see Iowa Code section 103A.9(7)).

Governmental subdivisions who are issuing building permits and are inspecting construction for compliance with the local building regulations shall verify the installation of factory-built structures within their jurisdiction and shall sign the installation certificate and forward the appropriate copy to the commissioner.

1. The local official shall obtain the installation certificate and the installation seal from the person making application for a building permit which includes a factory-built structure.

2. Upon completion and review of the installation the local official shall attach the installation seal to the unit.

3. Governmental subdivisions are permitted to assess fees as may be required by local ordinances.

4. Nothing in this rule is intended to reduce the authority of the governmental subdivision from establishing zoning regulations as outlined in Iowa Code sections 414.28 and 335.30.

**661—16.629(103A) Support and anchoring systems submission.**

**16.629(1)** *Submission by manufacturer.* The manufacturer of each manufactured home installed in Iowa shall submit to the building code commissioner a copy of the installation instructions by mail in printed form and in an electronic form acceptable to the commissioner.

**16.629(2)** *Submission by licensed professional engineer.* A licensed professional engineer who designs a support and anchoring system for use in the installation of a manufactured home in Iowa shall submit to the building code commissioner a copy of the specifications and instructions for the system by mail in printed form and in an electronic form acceptable to the building code commissioner. A support and anchoring system designed by a licensed professional engineer shall not be utilized unless it has been submitted to the building code commissioner in compliance with this subrule.

TABLE 6A
MINIMUM NUMBER OF TIEDOWNS
REQUIRED FOR SINGLEWIDE MOBILE HOMES

| MOBILE HOME BOX LENGTH NOT EXCEEDING | MINIMUM NUMBER OF TIEDOWNS PER SIDE | |
|---|---|---|
| | DIAGONAL TIES | VERTICAL TIES* |
| 40′-0″ | 3 | 2 |
| 54′-0″ | 3 | 2 |
| 73′-0″ | 4 | 2 |
| 84′-0″ | 5 | 2 |

*If more than minimum number of vertical or diagonal ties have been supplied, they shall all be used.

NOTES:

1. Doublewide mobile homes shall comply with Table 6A except that no vertical ties are required.
2. Wherever a vertical tie and a diagonal tie lie in a plane which is vertical and transverse to the main longitudinal beam, both ties may be connected to the same ground anchor, providing that particular anchor withstands both loadings.
3. This table shall be used only if there are no manufacturers approved installation requirements.

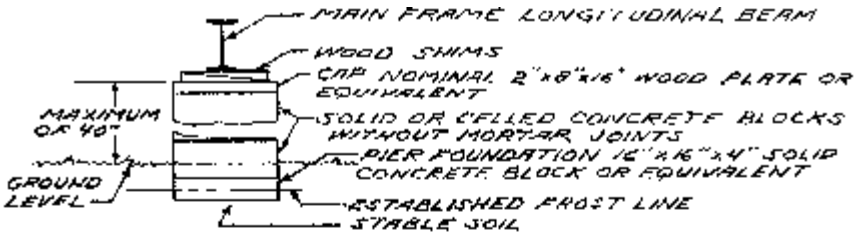


FIGURE I. PIERS UP TO 40" IN HEIGHT
(SINGLE BLOCK CONSTRUCTION)

NOTE: CORNER PIERS MORE THAN THREE (3) BLOCKS HIGH SHALL BE DOUBLE BLOCK CONSTRUCTION AS SHOWN IN FIGURES 2 & 3

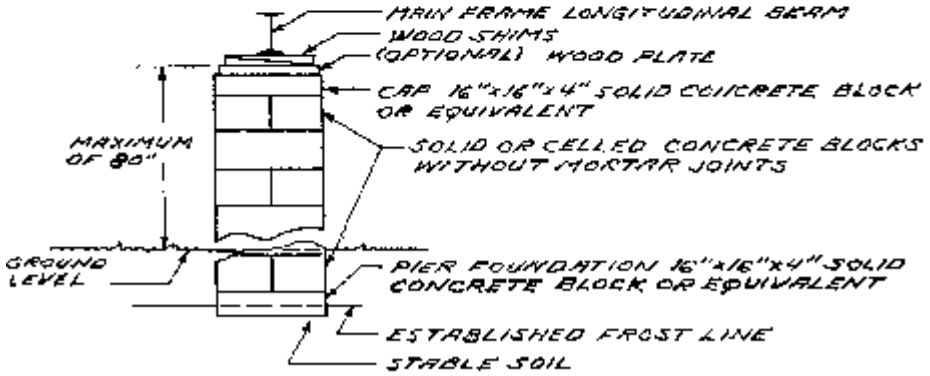


FIGURE 2 - PIERS OVER 40" IN HEIGHT AND NOT EXCEEDING 80" IN HEIGHT (DOUBLE BLOCK CONSTRUCTION)

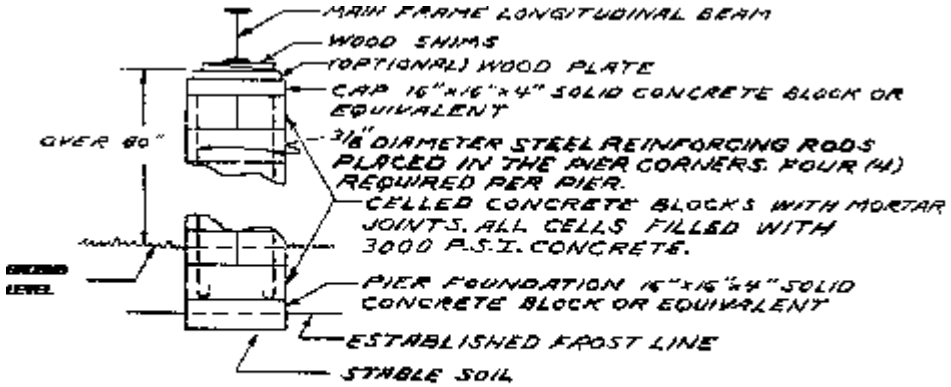


FIGURE 3 - PIERS OVER 80" IN HEIGHT (DOUBLE BLOCK CONSTRUCTION, STEEL REINFORCED)

FIGURE 4

MOBILE HOME TIEDOWN

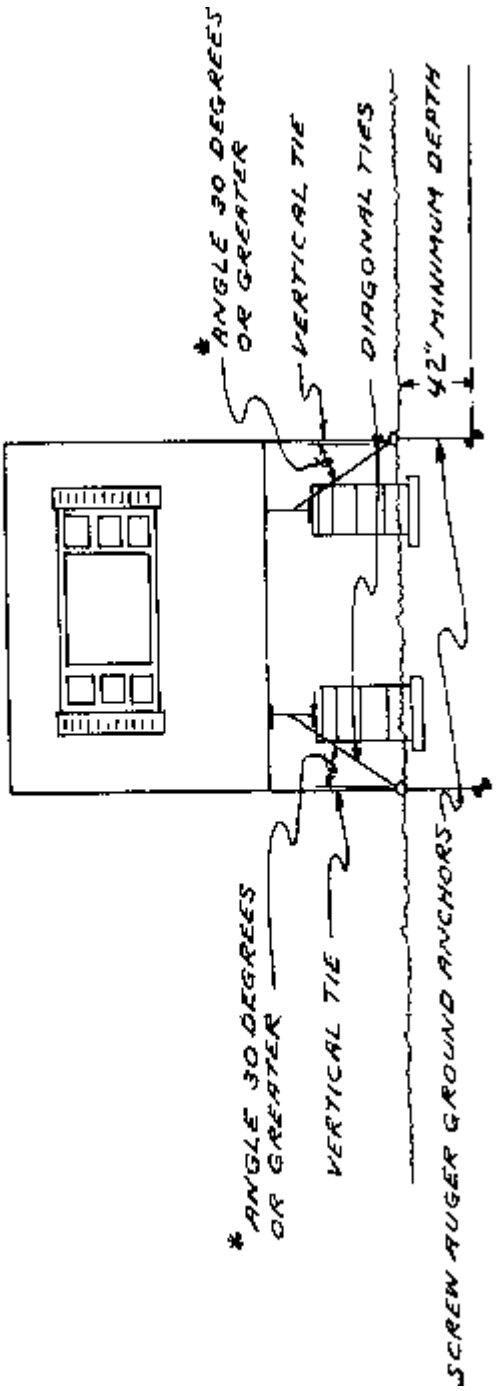


*DIAGONAL TIE SHALL DEVIATE FROM A VERTICAL DIRECTION 30 DEGREES OR MORE.

FIGURE 5

DOUBLE WIDE MOBILE HOME TIEDOWN

*DIAGONAL TIE SHALL DEVIATE FROM A VERTICAL DIRECTION 30 DEGREES OR MORE.

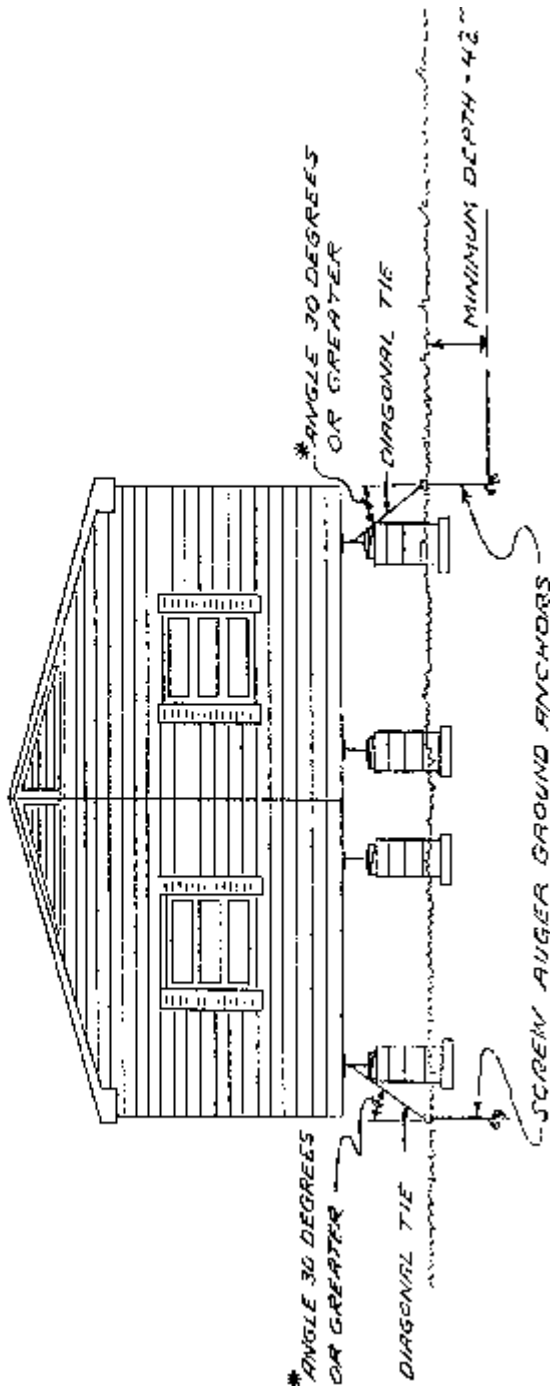

**661—16.630** to **16.699** Reserved.

**661—16.700** to **16.720** Rescinded IAB 12/21/05, effective 4/1/06. See 661—Chapter 302.

**661—16.721** to **16.799** Reserved.

**661—16.800** to **16.802** Rescinded IAB 12/21/05, effective 4/1/06. See 661—Chapter 303.

These rules are intended to implement Iowa Code section 103A.7 and Public Law 102-486.

[Filed and effective 7/15/75]
[Filed 7/7/77, Notice 4/20/77—published 7/27/77, effective 9/1/77]
[Filed 11/14/77, Notice 9/21/77—published 11/30/77, effective 1/4/78]
[Filed emergency 12/13/77—published 12/28/77, effective 1/4/78]
[Filed 9/27/78, Notice 3/22/78—published 10/18/78, effective 11/22/78]
[Filed emergency after Notice 2/6/79—published 3/7/79, effective 2/6/79, Notice 11/1/78][1]
[Filed 12/15/80, Notice 6/25/80—published 1/7/81, effective 3/1/81][2]
[Filed 10/30/81, Notice 9/2/81—published 11/25/81, effective 1/1/82]
[Filed 6/16/83, Notice 4/13/83—published 7/6/83, effective 8/12/83]
[Filed 8/10/84, Notice 5/23/84—published 8/29/84, effective 10/3/84]
[Filed 10/17/86, Notice 7/16/86—published 11/5/86, effective 1/1/87]
[Filed 12/23/86, Notice 7/16/86—published 1/14/87, effective 2/19/87]
[Filed 8/31/87, Notice 6/3/87—published 9/23/87, effective 11/1/87]
[Filed 4/1/88, Notice 9/23/87—published 4/20/88, effective 5/25/88]
[Filed 10/25/88, Notice 9/7/88—published 11/16/88, effective 1/1/89][3]
[Filed emergency 7/21/89—published 8/9/89, effective 7/21/89]
[Filed 10/13/89, Notice 8/9/89—published 11/1/89, effective 12/6/89]
[Filed 12/22/89, Notice 10/18/89—published 1/10/90, effective 2/14/90]
[Filed emergency 1/17/90—published 2/7/90, effective 2/14/90]
[Filed emergency 12/21/90—published 1/9/91, effective 1/1/91]
[Filed 3/29/91, Notice 11/28/90—published 4/17/91, effective 6/1/91]
[Filed 5/10/91, Notice 4/3/91—published 5/29/91, effective 7/3/91]
[Filed 8/28/92, Notice 5/27/92—published 9/16/92, effective 11/1/92]
[Filed 2/12/93, Notice 10/14/92—published 3/3/93, effective 5/1/93]
[Filed 9/23/94, Notice 7/6/94—published 10/12/94, effective 11/16/94]
[Filed 5/16/97, Notice 11/20/96—published 6/4/97, effective 7/15/97]
[Filed 11/26/97, Notice 10/22/97—published 12/17/97, effective 2/1/98]
[Filed 11/9/00, Notice 7/26/00—published 11/29/00, effective 1/3/01]
[Filed 11/9/00, Notice 10/4/00—published 11/29/00, effective 1/3/01]
[Filed emergency 3/23/01—published 4/18/01, effective 4/1/01]
[Filed emergency 9/27/01—published 10/17/01, effective 10/1/01]
[Filed 6/13/03, Notice 11/27/02—published 7/9/03, effective 1/1/04]
[Filed emergency 1/30/04—published 2/18/04, effective 2/1/04]
[Filed 4/9/04, Notice 2/18/04—published 4/28/04, effective 6/2/04]
[Filed emergency 11/24/04—published 12/22/04, effective 12/1/04]
[Filed emergency 3/25/05—published 4/13/05, effective 4/1/05]
[Filed 12/2/05, Notice 9/14/05—published 12/21/05, effective 4/1/06]
[Filed emergency 6/12/08—published 7/2/08, effective 7/1/08]

[1] Inadvertently dropped out from 1/7/81 IAC Supplement replacement pages.

[2] Effective date of IAB amendments to [O.P.P. 5.600 to 5.629] Division VI (16.600 to 16.629) delayed 70 days by the Administrative Rules Review Committee.

[3] Effective date (1/1/89) of 16.120(2)[3802 "h" only] delayed until adjournment of the 1988 Session of the General Assembly by the Administrative Rules Review Committee at its December 13, 1988, meeting.
NOTE: Subrule 16.110(1) revised 7/30/97 in accordance with agency directive.

# CHAPTER 17
# CRIME VICTIM REPARATION

[Prior to 4/20/88, see Public Safety Department[680] Ch 17]

Program transferred to the Department of Justice—Attorney General[61] Ch 9, IAB 9/20/89. See 1989 Iowa Acts, House File 700.

# CHAPTER 18
# PARKING FOR PERSONS WITH DISABILITIES

**661—18.1(321L) Scope.** These rules shall apply to all public and private parking facilities, temporary or permanent, used by the general public.

**661—18.2(321L) Location.** Parking spaces designated for persons with disabilities and accessible passenger loading zones that serve a particular building shall be located on the shortest possible accessible circulation route to an accessible entrance of the building. In separate parking structures or lots that do not serve a particular building, parking spaces for persons with disabilities shall be located on the shortest possible circulation route to an accessible pedestrian entrance of the parking facility. When parking spaces for persons with disabilities are required for buildings with more than one accessible entrance, the spaces shall be distributed so that each accessible entrance shall have at least one parking space for persons with disabilities located on the shortest accessible route to that entrance.

EXCEPTION: If the required number of spaces is less than the number of accessible entrances, the spaces shall be distributed so that as many entrances as possible are served by at least one parking space for persons with disabilities located on the shortest accessible route to those entrances.

**661—18.3(321L) Dimensions.**

**18.3(1)** Single space. Parking spaces for persons with disabilities shall be at least 96 inches wide and shall have an adjacent access aisle 60 inches wide minimum (see Figure 1). Parking vehicle overhangs shall not reduce the clear width of an accessible circulation route. Parking spaces and access aisles shall be level with surface slopes not exceeding 1:50 in all directions.

**18.3(2)** Multiple spaces. Two accessible parking spaces may share a common access aisle (see Figure 1).

**18.3(3)** The requirements of subrules 18.3(1) and 18.3(2) do not apply to parallel on-street parking spaces.

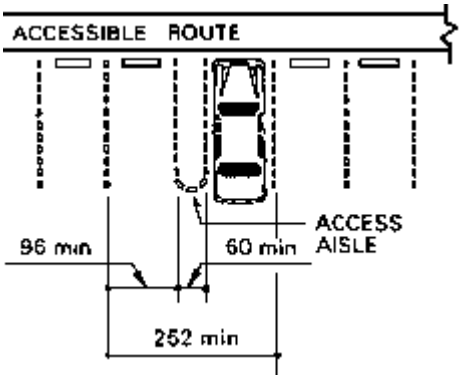


Figure 1
Dimensions of Parking Spaces

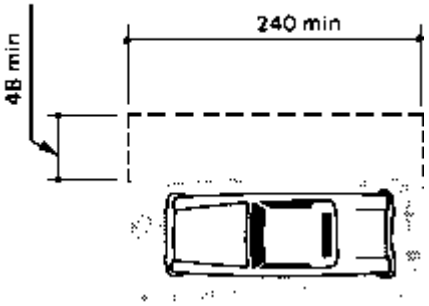


Figure 2
Access Aisle at Passenger Loading Zones

**18.3(4)** Van-accessible spaces. The first parking space for persons with disabilities provided in a parking lot or parking structure, and every eighth parking space for persons with disabilities provided thereafter, shall be a van-accessible space. A "van-accessible" space shall be 96 inches wide with an adjacent access aisle at least 96 inches wide (see Figure 3). Two adjacent van-accessible spaces may share a common access aisle.

EXCEPTION: Entities providing parking spaces for persons with disabilities are not required to provide van-accessible spaces if all of the parking spaces for persons with disabilities provided in a parking lot or structure are "universally accessible." A "universally accessible" space is at least 132 inches wide with an adjacent 60-inch wide access aisle. Two adjacent universally accessible spaces may share a common access aisle (see Figure 4).

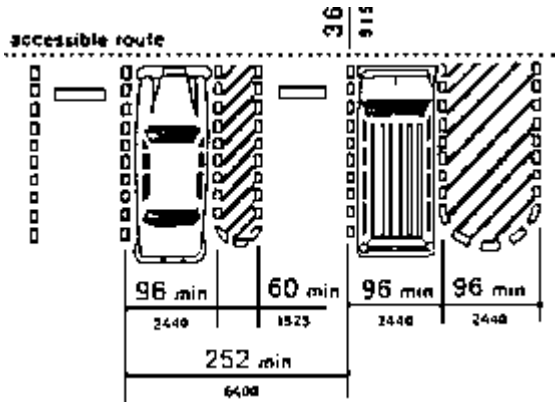


Figure 3
Van-Accessible Space at End of Row

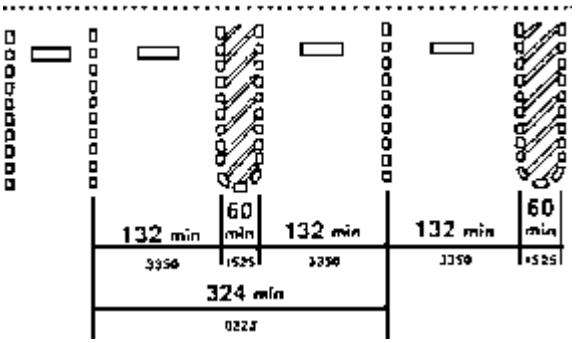


Figure 4
"Universal" Accessible Parking Spaces

**661—18.4(321L) Access aisles and loading zones.**

**18.4(1)** Passenger loading zones shall provide an access aisle at least 48 inches wide and 20 feet long adjacent and parallel to the vehicle pull-up space (see Figure 2). Vehicle standing spaces and access aisles shall be level with surface slopes not exceeding 1:50 in all directions.

NOTE: Projects which are required to comply with the Uniform Federal Accessibility Standards shall provide a width of 60 inches for the access aisle.

**18.4(2)** A minimum vertical clearance of 108 inches shall be provided at accessible passenger loading zones and along vehicle access routes to such areas from site entrances.

NOTE: Uniform Federal Accessibility Standard requires 114 inches of vertical clearance.

**18.4(3)** If there are curbs between the access aisle and the vehicle pull-up space, then a curb ramp complying with Iowa Code section 216C.9 shall be provided.

**661—18.5(321L) Designation.** Each parking space for persons with disabilities shall be designated as reserved for persons with disabilities by a sign meeting the following requirements established in Iowa Code section 321L.6:

**18.5(1)** Each persons with disabilities parking sign shall have the international symbol of accessibility in white on a blue background.

**18.5(2)** Each persons with disabilities parking sign shall be affixed vertically to another object so that it is readily visible to the driver of a vehicle approaching the parking space for persons with disabilities. Signs shall be mounted so that the bottom of the sign is no less than five feet nor more than seven feet from the surface level of the parking space.

EXCEPTION 1: Signs in use prior to February 1, 2001, which are readily visible to the driver of a vehicle approaching the parking space may continue to be used until replaced.

EXCEPTION 2: Signs marking parking spaces for persons with disabilities which are affixed to other approved parking signs and devices are not required to meet the minimum or maximum height requirements of this rule, provided that the signs are clearly visible to the drivers of vehicles approaching the spaces which they mark.

NOTE: The pavement in a persons with disabilities parking space may be marked with the international symbol of accessibility, but such marking does not meet the requirements of this subrule.

**18.5(3)** Each persons with disabilities parking sign may include language stating the amount of the fine for improperly using the persons with disabilities parking space. If a persons with disabilities parking sign includes language stating the amount of the fine, it shall reflect the current specified amount of the fine.

**661—18.6(321L) Numbers of parking spaces for persons with disabilities required in off-street parking facilities.**

**18.6(1)** At least 2 percent of the total parking spaces in any off-street nonresidential parking facility available to the public shall be designated as spaces for persons with disabilities, rounded to the nearest whole number of parking spaces for persons with disabilities. There shall be at least one parking space for persons with disabilities in any off-street nonresidential parking facility available to the public which has a total of ten or more parking spaces.

**18.6(2)** All off-street parking facilities on which construction is completed on or after July 1, 1991, which provide parking to the general public and which provide ten or more parking spaces, shall designate parking spaces for persons with disabilities in accordance with the following table:

| Total Parking Spaces In Lot | Required Minimum Number of Parking Spaces for Persons with Disabilities |
|---|---|
| 10 to 25 | 1 |
| 26 to 50 | 2 |
| 51 to 75 | 3 |
| 76 to 100 | 4 |
| 101 to 150 | 5 |
| 151 to 200 | 6 |
| 201 to 300 | 7 |
| 301 to 400 | 8 |
| 401 to 500 | 9 |
| 501 to 1,000 | * |
| 1,001 and over | ** |

*2 percent of total
**20 spaces plus 1 for each 100 over 1,000

NOTE: Projects which are required to comply with the Uniform Federal Accessibility Standards shall provide a minimum of one parking space for persons with disabilities.

**661—18.7(321L) Persons with disabilities parking at residential facilities.** All public and private buildings and facilities, temporary and permanent, which are residences and which provide ten or more tenant parking spaces, excluding extended health care facilities, shall designate at least one parking space for persons with disabilities as needed for each individual dwelling unit in which a person with a disability resides. Residential buildings and facilities which provide public visitor parking of ten or more spaces shall designate parking spaces for persons with disabilities in the visitors' parking area in accordance with the table contained in rule 661—18.6(321L).

**661—18.8(321L) On-street parking.** Provisions for parking spaces for persons with disabilities in on-street parking areas within city business districts shall be as required by Iowa Code section 321L.5.

These rules are intended to implement Iowa Code chapter 321L.

[Filed 6/22/90, Notice 1/10/90—published 7/11/90, effective 8/15/90]
[Filed emergency 7/20/90—published 8/8/90, effective 8/15/90]
[Filed 12/28/95, Notice 8/2/95—published 1/17/96, effective 3/1/96]
[Filed 11/22/00, Notice 5/17/00—published 12/13/00, effective 2/1/01]

# CHAPTER 19
# MISSING PERSON INFORMATION CLEARINGHOUSE

[Prior to 4/20/88, see Public Safety Department[680] Ch 19]

Rescinded IAB 11/22/06, effective 1/1/07

# CHAPTER 20
# GOVERNOR'S TRAFFIC SAFETY BUREAU
[Prior to 4/20/88, see Planning and Programming[630] Ch 12]

**661—20.1(23USC402,ExecOrd23) Authority.** Title 23 U.S.C. section 402 requires each state to have a highway safety program sponsored by the U.S. Secretary of Transportation and for which the governor of the state shall be responsible.

**20.1(1)** The governor has designated the commissioner of the department of public safety as governor's highway safety representative for Iowa and established the department of public safety as the state highway safety agency in Governor's Executive Order Number Twenty-Three, signed June 9, 1986, and published in the Iowa Administrative Bulletin on July 2, 1986.

**20.1(2)** The governor's traffic safety bureau shall administer the state highway safety program in accordance with the provisions of Title 23 U.S.C. and Governor's Executive Order Number Twenty-Three.

**661—20.2(23USC402,ExecOrd23) Purpose.** The purpose of the highway safety program is to provide a coordinated federal, state and local effort to reduce traffic-related deaths, injuries, and property damage crashes.

The following eight highway safety priority areas have been established by the federal government to provide a guide to program involvement and reimbursement: alcohol; police traffic services; emergency medical services; traffic records; occupant restraints; engineering; motorcycles; and pedestrians/bicycles.

**661—20.3(23USC402,ExecOrd23) Responsibilities.**

**20.3(1)** The governor's traffic safety bureau shall develop and prepare the state's highway safety plan based on evaluation of highway crashes and traffic safety problems within the state.

**20.3(2)** The governor's traffic safety bureau shall encourage and assist local units of government in improving their traffic safety programs.

**20.3(3)** The governor's traffic safety bureau shall serve as a reviewing authority for federal and state traffic safety programs.

**20.3(4)** The governor's traffic safety bureau shall monitor safety program activity and expenditures of funds by state and local agencies as authorized by Title 23 U.S.C. 402.

**20.3(5)** The governor's traffic safety bureau shall coordinate the state highway safety plan with other state agencies.

**20.3(6)** Application for funding.

*a.* Proposals for funding highway safety programs may be submitted at any time by any city, county, or state agency, or nonprofit organization or any other eligible organization or individual.

*b.* Applications must be received on or before March 1 to be considered for funding in the next federal fiscal year beginning October 1.

*c.* Initial proposals should include project title, statement of the highway safety problem to be addressed supported by three years of crash data, what is being proposed to solve the problem, how it will be evaluated, a proposed budget, and a letter of intent accepting responsibility for the proposed project from the responsible authority of the organization making application.

*d.* Only written requests containing the listed elements will be considered for funding.

*e.* Assistance in developing and submitting proposals for highway safety funding may be obtained by contacting the Director, Governor's Traffic Safety Bureau, Iowa Department of Public Safety, 307 East 7th Street, Des Moines, Iowa 50319, or by electronic mail via the Internet at gtsbinfo@safe.ia.gov.

EXCEPTION: Applications for funding of programs pursuant to the authority of 23 U.S.C. 153 must be received by the governor's traffic safety bureau on or before June 1 to be considered for the following federal fiscal year.

**661—20.4(23USC402,ExecOrd23) Funding criteria.**

**20.4(1)** Allocation of federally appropriated funds administered by the governor's traffic safety bureau pursuant to Title 23 U.S.C. as amended through September 1, 1993, shall be based on: (1) federally mandated projects; and (2) high fatality and personal injury crash causations and locations.

The following criteria will be used to rank Iowa's counties according to the severity of their highway safety problems:

*a.* Fatal crashes by county.
*b.* Personal injury crashes by county.
*c.* Serious personal injury crashes by county.
*d.* Alcohol-related fatal crashes by county.
*e.* Alcohol-related personal injury crashes by county.
*f.* Vehicle miles of travel by county.
*g.* Serious traffic offenses by county.
*h.* Fatal and injury crashes involving motorcycles by county.
*i.* Fatal and injury crashes involving pedestrians and bicycles by county.

Eligibility of counties, and cities within those counties, for the limited federal funds available will be determined according to county rankings on the nine listed criteria.

**20.4(2)** At least 40 percent of all federal funds apportioned to the state of Iowa pursuant to Title 23 U.S.C., Section 402, for any fiscal year shall be expended by political subdivisions of the state to carry out local highway safety programs authorized by the governor's representative for highway safety.

**661—20.5(23USC402,ExecOrd23) Program requirements.**

**20.5(1)** All approved programs funded by the governor's traffic safety bureau must be administered in compliance with the Iowa Governor's Traffic Safety Bureau Policies and Procedures Manual, 1993.

**20.5(2)** Highway safety contract procedures and reporting forms and their explanations are contained in the Iowa Governor's Traffic Safety Bureau Policies and Procedures Manual, 1993.

**20.5(3)** Single copies of the Iowa Governor's Traffic Safety Bureau Policies and Procedures Manual may be obtained on request from the Director, Governor's Traffic Safety Bureau, Iowa Department of Public Safety, 307 East 7th Street, Des Moines, Iowa 50319.

These rules are intended to implement Title 23 U.S.C., Section 402, as amended through September 1, 1993, and Governor's Executive Order Number Twenty-Three, signed June 9, 1986.

[Filed 7/15/75]
[Filed 5/27/77, Notice 9/8/76—published 6/15/77, effective 7/20/77]
[Filed 7/29/80, Notice 3/19/80—published 8/20/80, effective 9/24/80]
[Filed 2/13/81, Notice 10/29/80—published 3/4/81, effective 4/8/81]
[Filed 4/1/88, Notice 9/23/87—published 4/20/88, effective 5/25/88]
[Filed emergency 2/11/94—published 3/2/94, effective 3/1/94]
[Filed 4/29/94, Notice 10/13/93—published 5/25/94, effective 7/1/94]
[Filed emergency 1/27/95—published 2/15/95, effective 2/1/95]

## CHAPTER 21
## STATE MEDICAL EXAMINER

[Prior to 4/20/88, see Medical Examiner, State[566] Ch 1]

Rescinded IAB 7/28/99, effective 7/1/99; see 641—Ch 126.

## CHAPTER 23
## CLOSED CIRCUIT VIDEOTAPE SURVEILLANCE SYSTEMS ON EXCURSION GAMBLING BOATS

Rescinded IAB 6/8/05, effective 8/1/05

## CHAPTER 24
## Reserved

# CHAPTER 25
# PUBLIC RECORDS AND FAIR INFORMATION PRACTICES

The department adopts portions of the final report of the Governor's Task Force.

## PREAMBLE

**Scope.** These rules are to provide notice of how the department keeps records and what the procedures are for access by the public. Nothing in these rules affects the access of information by law enforcement agencies, agencies of government or persons authorized by chapter 110A or 692 of the Iowa Code to receive information.

**661—25.1(17A,22) Definitions.** As used in this chapter:

*"Agency"* means the "department of public safety."

**661—25.2(17A,22) Statement of policy.** (Uniform rule adopted)

**661—25.3(17A,22) Requests for access to records.**

**25.3(1)** *Location of record.* A request for access to a record should be directed to the office where the record is kept. If the location of the record is not known by the requester, the request shall be directed to the Public Information Bureau, Department of Public Safety, 215 East 7th Street, Des Moines, Iowa 50319.

**25.3(2)** *Office hours.* Open records shall be made available during customary office hours, which are 8 a.m. to 4:30 p.m. daily, excluding Saturdays, Sundays, and legal holidays.

**25.3(3)** *Request for access.* A request for access to open records may be made in writing, by electronic mail, in person, or by telephone. The request shall identify the particular records sought by name or description in order to facilitate the location of the record. Mail or telephone requests shall include the name, address, and telephone number of the person requesting the information. A person shall not be required to give a reason for requesting an open record.

**25.3(4)** *Response to requests.* Access to an open record shall be provided promptly upon request unless the size or nature of the request makes prompt access infeasible. If the size or nature of the request for access to an open record requires time for compliance, the custodian shall comply with the request as soon as feasible. Access to an open record may be delayed for one of the purposes authorized by Iowa Code section 22.8(4) or 22.10(4). The custodian shall promptly give notice to the requester of the reason for any delay in access to an open record and an estimate of the length of that delay and, upon request, shall promptly provide that notice to the requester in writing. The custodian shall also provide to the requester an estimate of any fees which will be assessed to cover the costs of complying with the request.

**25.3(5)** *Security of record.* (Uniform subrule adopted)

**25.3(6)** *Copying.* A reasonable number of copies of an open record may be made in the departmental office. If photocopy equipment is not available in the departmental office where an open record is kept, the custodian shall permit its examination in that office or a nearby location and shall arrange to have copies promptly made elsewhere. An electronic copy may be provided if mutually agreeable to the custodian and the requester.

**25.3(7)** *Fees.*

*a.* *When charged.* (Uniform paragraph adopted)

*b.* *Copying and postage costs.* (Uniform paragraph adopted)

*c.* *Search and supervisory fees.* Fees may be charged for actual agency expenses in searching for and supervising the examination and copying of requested records. The custodian shall notify the requester of the hourly fees to be charged for searching for records and supervision of records during examination and copying. That hourly fee shall not be in excess of the hourly wage of an agency

employee who ordinarily would be appropriate and suitable to perform these search and supervisory functions.

*d. Advance deposits.*

(1) When the estimated total fee chargeable under this subrule exceeds $25, the custodian may require a requester to make an advance payment to cover all or a part of the estimated fee.

(2) When a requester has previously failed to pay a fee chargeable under this subrule, the custodian may require payment of the full amount of any fees previously owed and of any estimated fees for the new request prior to processing any new request from the requester.

**661—25.4(17A,22) Procedures for access to confidential records.** This rule contains the provisions governing public access to confidential records in addition to those specified for all records in rule 25.3(17A,22). These provisions do not apply to law enforcement agencies, agencies of government or persons authorized by Iowa Code chapter 692 or 100A to receive confidential information.

**25.4(1)** *Proof of identity.* (Uniform subrule adopted)

**25.4(2)** *Requests.* (Uniform subrule adopted)

**25.4(3)** Reserved.

**25.4(4)** *Request denied.* (Uniform subrule adopted)

**25.4(5)** *Request granted.* (Uniform subrule adopted)

**661—25.5(17A,22) Requests for treatment of a record as a confidential record.**

**25.5(1)** Any person who would be substantially or irreparably injured by disclosure of all or a part of a record to members of the public may file a request, as provided in this rule, for its treatment as a confidential record. Failure of a person to request confidential record treatment for all or part of a record does not preclude the agency from treating it as a confidential record.

**25.5(2)** A request for the treatment of a record as a confidential record shall be in writing and shall be filed with the custodian of that record. The request shall include an enumeration of the specific grounds upon which examination would not be in the public interest; the specific provisions of law that authorize confidential record treatment; and the name, address, and telephone number of the person authorized to respond to any agency action concerning the request. A person filing a request shall, if possible, accompany the request with a copy of the record in question from which those portions for which confidential record treatment has been requested have been deleted. If the original record is being submitted to the agency by the person requesting confidentiality at the same time the request is filed, the person shall indicate conspicuously on the original record that all or portions of it are a confidential record. Requests for treatment of all or portions of a record as a confidential record for a limited time period shall also specify the precise period of time for which confidential record treatment is requested.

**25.5(3)** *Failure to request.* (Uniform subrule adopted)

**25.5(4)** *Timing of decision.* (Uniform subrule adopted)

**25.5(5)** *Request granted or deferred.*

If a request for confidential record treatment is denied, requester may seek review or relief under Iowa Code section 22.8.

**661—25.6(17A,22) Procedure by which a subject may have additions, dissents, or objections entered into the record.** Except as otherwise provided by law, the subject of a record shall have the right to have a written statement of additions, dissents, or objections entered into the record. The subject shall send the statement to the custodian of the record. The statement must be dated and signed by the subject, and shall include the current address and telephone number of the subject or the subject's representative.

This rule does not apply to criminal investigation, identification or intelligence files.

Access to criminal history data shall be governed by Iowa Code section 692.5.

**661—25.7(17A,22) Consent to disclosure by the subject of a confidential record.** The subject of a confidential record may consent to agency disclosure to a third party of that portion of the record

concerning the subject. The consent must be in writing and must identify the particular record or records that may be disclosed, the particular person, or class of persons, to whom the record may be disclosed, and where applicable, the time period during which the record may be disclosed. The subject and, where applicable, the person to whom the record is to be disclosed may be required to provide proof of identity.

This rule does not apply to criminal investigation, identification or intelligence files.

Access to criminal history data shall be governed by Iowa Code section 692.5.

**661—25.8** Reserved.

**661—25.9(17A,22) Disclosures without the consent of the subject.**

**25.9(1)** Open records are routinely disclosed without the consent of the subject.

**25.9(2)** To the extent allowed by law, disclosure of confidential records may occur without the consent of the subject. Following are instances where disclosure, if lawful, will generally occur without notice to the subject:

*a.* For a routine use as defined in rule 25.10(17A,22) or in any notice for a particular record system.

*b.* To a recipient who has provided the agency with advance written assurance that the record will be used solely as a statistical research or reporting record; provided, that, the record is transferred in a form that does not identify the subject.

*c.* To another government agency or to an instrumentality of any governmental jurisdiction within or under the control of the United States for a civil or criminal law enforcement activity if the activity is authorized by law, and if an authorized representative of such government agency or instrumentality has submitted a written request to the agency specifying the record desired and the law enforcement activity for which the record is sought.

*d.* To an individual pursuant to a showing of compelling circumstances affecting the health or safety of any individual if a notice of the disclosure is transmitted to the last known address of the subject.

*e.* To the legislative services agency.

*f.* Disclosures in the course of employee disciplinary proceedings.

*g.* In response to a court order or subpoena.

**661—25.10(17A,22) Routine use.**

**25.10(1)** Defined. "Routine use" means the disclosure of a record without the consent of the subject or subjects, for a purpose which is compatible with the purpose for which the record was collected. It includes disclosures required to be made by statute other than the public records law, Iowa Code chapter 22.

**25.10(2)** To the extent allowed by law, the following uses are considered routine uses of all agency records:

*a.* Disclosure to those officers, employees, and agents of the agency who have a need for the record in the performance of their duties. The custodian of the record may upon request of any officer or employee, or on the custodian's own initiative, determine what constitutes legitimate need to use confidential records.

*b.* Disclosure of information indicating an apparent violation of the law to appropriate law enforcement authorities for investigation and possible criminal prosecution, civil court action, or regulatory order.

*c.* Disclosure to the department of inspections and appeals for matters in which it is performing services or functions on behalf of the agency.

*d.* Transfers of information within the agency, to other state agencies, or to local units of government as appropriate to administer the program for which the information is collected.

*e.* Information released to staff of federal and state entities for audit purposes or for purposes of determining whether the agency is operating a program lawfully.

*f.* Any disclosure specifically authorized by the statute under which the record was collected or maintained.

**661—25.11(17A,22) Records management manual.** The department's "Records Management Manual" contains the records management information requested by Iowa Code chapter 22.

The manual is available for examination and copying at the Administrative Services Division, Department of Public Safety, Wallace State Office Building, Des Moines, Iowa 50319, and at district offices.

**661—25.12(17A,22) Data processing system.** All departmental data processing systems that have common data element can potentially match, collate or compare personally identifiable information.

**661—25.13(22) Confidential records.** This rule describes the types of departmental information or records that are confidential, in addition to those listed in Iowa Code chapter 22. This rule is not exhaustive.

1. Investigative reports including laboratory reports. (Iowa Code sections 22.7, 622.11, 692.2)
2. Criminal histories. (Iowa Code sections 22.7, 622.11, 692.2)
3. Intelligence reports. (Iowa Code sections 22.7, 622.11, 692.2)
4. Domestic abuse reports. Information which individually identifies perpetrators or victims of domestic abuse. (Iowa Code sections 22.7, 236.9)
5. Radio communication log where it contains criminal history and intelligence information. (Iowa Code sections 22.7, 692.2)
6. Personal information in confidential personnel files including but not limited to evaluations, discipline, social security numbers, medical and psychological evaluations.
7. Complaint files, investigative files and similar information relating to private investigative agency licensees. (Iowa Code sections 22.7, 80A.17)
8. Records received from other agencies which would be confidential if created by the department. (Iowa Code sections 22.7, 692.2, 692.3)
9. Any report, manual, or other record which contains information concerning security procedures or emergency preparedness information related to the protection of employees of the department, employees of other agencies of state government, employees of other units of government, visitors to state government facilities or offices, other persons on premises controlled by any state or local government agency, or property owned by or under the control of the department, any other state agency, or any other unit of government, or information concerning security procedures or emergency preparedness information related to persons or property owned by or under the control of a private entity if that information was obtained by the department in relation to planning for emergencies or developing security procedures, or with an assurance that the information would be maintained as confidential.

**661—25.14(252J) Release of confidential licensing information for child support recovery purposes.** Notwithstanding any statutory confidentiality provision, the department may share information with the child support recovery unit of the Iowa department of human services through manual or automated means for the sole purpose of identifying licensees or applicants subject to enforcement of child support orders pursuant to Iowa Code chapter 252J or 598.

**661—25.15(22,82GA,SF457) Release of official photographs of employees.** An official photograph of any employee of the department shall be released only if either of the following is true:

1. The employee has signed a written release giving permission to release the photograph; or
2. A request has been received to release the photograph pursuant to Iowa Code chapter 22.

A photograph of an employee of the department shall not be released if its release could jeopardize an ongoing investigation or place the employee at risk.

These rules are intended to implement Iowa Code chapter 22.

[Filed 4/29/88, Notice 3/23/88—published 5/18/88, effective 7/1/88]
[Filed 7/25/96, Notice 6/19/96—published 8/14/96, effective 10/1/96]
[Filed emergency 6/25/07—published 7/18/07, effective 7/1/07]

CHAPTERS 26 and 27
Reserved

# CHAPTER 28
# MARIJUANA ERADICATION PROCEDURES

**661—28.1(80) Reports of marijuana.** Persons wishing to report marijuana growing in Iowa, whether cultivated or uncultivated, may contact any local law enforcement agency within the state of Iowa or the Division of Narcotics Enforcement, Iowa Department of Public Safety, Wallace State Office Building, Des Moines, Iowa 50319. Reports may be made to the division of narcotics enforcement by telephone through the toll-free Marijuana Hotline at 1-800-532-0052.

**661—28.2(80) Cultivated marijuana.** Upon receipt of information pertaining to marijuana cultivation or harvesting, the department of public safety, division of narcotics enforcement, shall investigate. If the information is valid and cultivation or harvesting of marijuana is confirmed, the division of narcotics enforcement shall initiate a criminal investigation, which may lead to the subsequent filing of criminal charges.

**661—28.3(80) Uncultivated marijuana.**

**28.3(1)** Upon receipt of information pertaining to wild uncultivated marijuana, the department of public safety, division of narcotics enforcement, shall notify the county sheriff of the report. If the property on which uncultivated marijuana is reported lies within a municipality with a police department, the chief of police shall also be notified. After the sheriff has been notified, the department of public safety, division of narcotics enforcement, shall notify, by regular mail, the owner of the land where uncultivated marijuana has been reported and shall request that the land owner voluntarily remove the marijuana. The county sheriff and the local policy chief, if any, shall be sent copies of the notice to the landowner, also by regular mail.

**28.3(2)** Notification to a landowner of information regarding uncultivated marijuana, as provided in subrule 28.3(1), shall be provided on a completed form "Notice of Marijuana Complaint."

Notification to a landowner of information regarding uncultivated marijuana growing on the landowner's property, as provided in this subrule, is intended to obtain voluntary cooperation in the eradication of marijuana.

**28.3(3)** The department shall provide information and training to law enforcement agencies regarding the identification and removal of marijuana and assistance to the Iowa State University Agriculture and Home Economics Extension Service in developing programs concerning the identification and removal of marijuana.

**661—28.4(80) Scope and limitation.** Nothing in this chapter shall be construed to be a restriction or limitation upon the nature or scope of the authority of any member of the department of public safety or of any other public officer as otherwise provided by law.

These rules are intended to implement Iowa Code section 80.9.

[Filed 10/15/91, Notice 7/10/91—published 11/13/91, effective 1/1/92]

CHAPTERS 29 to 34
Reserved

# CHAPTER 35
# COMPLAINTS AGAINST EMPLOYEES
[Prior to 11/8/06, see 661—Ch 9]

**661—35.1(80) Definitions.** The following definitions apply to rules 661—35.1(80) through 661—35.3(80):

*"Complaint"* means an allegation by any person of a breach of rules or orders, a violation of the law, or other misconduct by an employee of the department.

*"Department"* means the Iowa department of public safety.

*"Employee"* means any employee of the department.

**661—35.2(80) Filing a complaint.**

**35.2(1)** Any person may file a complaint against an employee or employees by:

*a.* Mailing a complaint in writing to the professional standards bureau, at the following address:

Professional Standards Bureau
Iowa Department of Public Safety
Wallace State Office Building
Des Moines, Iowa 50319

Complaints in writing may be mailed or submitted to any office of the department.

*b.* Calling the professional standards bureau at (515)281-5524, or by calling any office of the department.

*c.* Completing the commendation/complaint form on line on the Web site of the department.

NOTE: The complaint form may be found at the following location: www.dps.state.ia.us/commis/psb/complaint.shtml.

**35.2(2)** The complainant should describe as specifically and completely as possible the nature of the complaint and the details of any incident or incidents which give rise to the complaint.

**35.2(3)** Each complaint received will be recorded and investigated.

**35.2(4)** The complainant need not be identified. Anonymous complaints will be accepted and investigated as thoroughly as possible.

**661—35.3(80) Notification to complainant.** The professional standards bureau shall provide any identified complainant with a written receipt of the complaint and may provide additional information regarding the complaint and its disposition as permitted by law.

These rules are intended to implement Iowa Code chapter 80.

[Filed 6/7/79, Notice 5/2/79—published 6/27/79, effective 8/2/79]
[Filed 4/1/88, Notice 9/23/87—published 4/20/88, effective 5/25/88]
[Filed 10/19/06, Notice 9/13/06—published 11/8/06, effective 1/1/07]

CHAPTERS 36 to 40
Reserved

# CHAPTER 41
# PAYMENT OF SMALL CLAIMS TO EMPLOYEES

[Prior to 5/23/07, see 661—Ch 14]

**661—41.1(17A,80) Authorization to reimburse.** The department is authorized to expend up to $150 per item, or any other amount authorized by a collective bargaining agreement to which an individual employee is subject, as reimbursement for replacement or repair of personal items of the department's employees that have been damaged or destroyed while the employee is engaged in service for the department. The following requirements shall apply for filing such claims with the department:

**41.1(1)** An employee making a claim for reimbursement shall provide the employee's immediate supervisor with a detailed written account of the circumstances under which the loss occurred, a description of the nature and ownership of the item destroyed or damaged and any available information, including the names and other identifiers of any witness, which can be used to verify the loss.

**41.1(2)** An employee filing a claim for reimbursement pursuant to this rule shall also provide the employee's immediate supervisor with vendors' estimates of replacement costs and with estimates of repair costs of damaged items.

**41.1(3)** The claim and estimates shall be passed through the chain of command for reimbursement. Reimbursement shall be based on a determination of the most economical and adequate compensation for the loss, taking into account the extent of the damage, the feasibility of repair and the cost of replacement.

This rule is intended to implement Iowa Code section 80.18.

[Filed 5/3/07, Notice 3/28/07—published 5/23/07, effective 7/1/07]

CHAPTERS 42 to 50
Reserved

# CHAPTER 51
# FLAMMABLE AND COMBUSTIBLE LIQUIDS

[Prior to 11/27/02, see rules 661—5.250(101) to 661—5.450(101)]

**661—51.1(101) Definitions.** The following definitions apply to rules 661—51.1(101) through 661—51.350(101).

*"Mobile air-conditioning system"* means mechanical vapor compression equipment which is used to cool the driver or passenger compartment of any motor vehicle.

*"NFPA"* means the National Fire Protection Association, Batterymarch Park, Quincy, MA 02269. References to the form "NFPA xx," where "xx" is a number, refer to the NFPA standard or pamphlet of the corresponding number.

**661—51.2** to **51.99** Reserved.

**661—51.100(101) Storage and handling of liquefied petroleum gases.** Rescinded IAB 5/23/07, effective 7/1/07; see 661—Chapter 226.

**661—51.101(101) Transfer into container.** Rescinded IAB 5/23/07, effective 7/1/07; see 661—Chapter 226.

**661—51.102(101) Prohibition of certain refrigerants.** Rescinded IAB 5/23/07, effective 7/1/07; see 661—Chapter 226.

**661—51.103** to **51.149** Reserved.

**661—51.150(101) Production, storage, and handling of liquefied natural gas.** NFPA 59A, "Standard for the Production, Storage and Handling of Liquefied Natural Gas (LNG)," 2001 edition, is adopted by reference as the rules governing liquefied natural gas.

**661—51.151** to **51.199** Reserved.

**661—51.200(101) Flammable and combustible liquids.** Rescinded IAB 11/21/07, effective 1/1/08.

**661—51.201(101) Storage, handling and use—plans approved.** Rescinded IAB 11/21/07, effective 1/1/08.

**661—51.202(101) Motor vehicle and aircraft fuel dispensing.** Rescinded IAB 11/21/07, effective 1/1/08.

**661—51.203(101) Storage in isolated areas.** Rescinded IAB 11/21/07, effective 1/1/08.

**661—51.204(101) Registration of existing and new tanks—fees.** Rescinded IAB 11/21/07, effective 1/1/08.

**661—51.205(101) Underground leakage of flammable and combustible liquids.** Rescinded IAB 11/21/07, effective 1/1/08.

**661—51.206(101) Observation wells.** Rescinded IAB 11/21/07, effective 1/1/08.

**661—51.207** to **51.249** Reserved.

**661—51.250(101) Oil burning equipment.** Rescinded IAB 11/21/07, effective 1/1/08.

**661—51.251** to **51.299** Reserved.

**661—51.300(101) Stationary combustion engines and gas turbines.** Rescinded IAB 11/21/07, effective 1/1/08.

**661—51.301** to **51.349** Reserved.

**661—51.350(101) Tank vehicles for flammable and combustible liquids.** Rescinded IAB 11/21/07, effective 1/1/08.

These rules are intended to implement Iowa Code chapter 101.

[Filed 11/8/02, Notice 9/18/02—published 11/27/02, effective 1/1/03]
[Filed emergency 9/22/05 after Notice 8/17/05—published 10/12/05, effective 10/1/05]
[Filed 12/27/06, Notice 10/25/06—published 1/17/07, effective 3/1/07]
[Filed 5/3/07, Notice 3/28/07—published 5/23/07, effective 7/1/07]
[Filed 11/1/07, Notice 9/26/07—published 11/21/07, effective 1/1/08]◊

◊ Two or more ARCs

# CHAPTER 52
Reserved

# CHAPTER 53
# FIRE SERVICE TRAINING BUREAU

**661—53.1(78GA,HF2492) Fire service training bureau.** There is established within the fire marshal division a fire service training bureau, with responsibility for instructing the general public and fire protection personnel throughout the state, providing service to public and private fire departments in the state, conducting research in the methods of maintaining and improving fire education consistent with the needs of Iowa communities, and performing any other functions assigned to the bureau by the state fire marshal in consultation with the state fire service and emergency response council.

The fire service training bureau is located at 3100 Fire Service Road, Ames, Iowa 50010-3100. The bureau can be contacted by telephone at (888)469-2374 (toll free) or at (515)294-6817, by fax at (800)722-7350 (toll free) or (515)294-2156, or by electronic mail at fstbinfo@dps.state.ia.us.

**661—53.2(78GA,HF2492) Programs, services, and fees.**

**53.2(1)** *Courses and tuition fees.* Current course offerings of the fire service training bureau are available in the document Catalog of Courses, Conferences and Services, available from the fire service training bureau upon request. Current course tuition fees and any other fees related to participation in courses shall be listed in the document Catalog of Courses, Conferences and Services, and shall be effective until superseded by publication of a later edition of the document. Prospective students should inquire of the fire service training bureau as to the date of most recent publication of the Catalog of Courses, Conferences and Services prior to submitting the tuition fee for a course.

**53.2(2)** *Conferences and fees.* Upcoming conferences offered by the fire service training bureau are listed in the document Catalog of Courses, Conferences and Services, available from the fire service training bureau upon request. Conference registration fees and any other fees related to attendance at conferences shall be listed in the document Catalog of Courses, Conferences and Services, and shall be effective until superseded by publication of a later edition of the document. Prospective students should inquire of the fire service training bureau as to the date of most recent publication of the Catalog of Courses, Conferences and Services prior to submitting registration fees or any other fees related to attendance at a conference.

**53.2(3)** *Publications and materials; fees.* All publications and materials currently offered for sale by the fire service training bureau are listed in the document Catalog of Publications and Materials, available from the fire service training bureau upon request. Current prices of publications shall be listed in the document Catalog of Publications and Materials, and shall be effective until superseded by publication of a later edition of the document. Persons wishing to purchase publications or materials should inquire of the fire service training bureau as to the date of most recent publication of the Catalog of Publications and Materials prior to submitting payment for publications or materials.

**53.2(4)** *Other services and tuition fees.* Services other than courses, conferences, and firefighter certification offered by the fire service training bureau are listed in the document Catalog of Courses, Conferences and Services, available from the fire service training bureau upon request. Current fees for these services shall be listed in the document Catalog of Courses, Conferences and Services, and shall be effective until superseded by publication of a later edition of the document. Prospective clients for these services should inquire of the fire service training bureau as to the date of most recent publication of the Catalog of Courses, Conferences and Services prior to submitting a request for or payment for any service.

These rules are intended to implement 2000 Iowa Acts, House File 2492.

[Filed emergency 6/22/00—published 7/12/00, effective 7/1/00]

CHAPTER 54
FIRE FIGHTER CERTIFICATION

Rescinded IAB 9/29/04, effective 12/1/04

CHAPTER 55
FIRE FIGHTER TRAINING AND EQUIPMENT FUNDS

Rescinded IAB 1/5/05, effective 3/1/05

CHAPTER 56
Reserved

CHAPTERS 56 and 57
Reserved

CHAPTERS 56 to 58
Reserved

CHAPTER 59
VOLUNTEER EMERGENCY SERVICES PROVIDER DEATH BENEFITS

Rescinded IAB 1/5/05, effective 3/1/05

CHAPTER 60
Reserved

CHAPTERS 60 and 61
Reserved

CHAPTERS 60 to 62
Reserved

CHAPTERS 60 to 63
Reserved

CHAPTERS 60 to 64
Reserved

CHAPTERS 60 to 65
Reserved

CHAPTERS 60 to 66
Reserved

CHAPTERS 60 to 67
Reserved

CHAPTERS 60 to 68
Reserved

CHAPTERS 60 to 69
Reserved

CHAPTERS 60 to 70
Reserved

CHAPTERS 60 to 71
Reserved

CHAPTERS 60 to 72
Reserved

CHAPTERS 60 to 73
Reserved

CHAPTERS 60 to 74
Reserved

CHAPTERS 60 to 75
Reserved

CHAPTERS 60 to 76
Reserved

CHAPTERS 60 to 77
Reserved

CHAPTERS 60 to 78
Reserved

CHAPTERS 60 to 79
Reserved

CHAPTERS 60 to 80
Reserved

# CHAPTER 81
# CRIMINAL INTELLIGENCE INFORMATION

[Prior to 11/8/06, see 661—8.201(692) to 8.207(692)]

**661—81.1(692) Definitions.** The following definitions apply to rules 661—81.1(692) through 661—81.5(692).

*"Criminal intelligence file"* means information stored in a criminal intelligence system that is compiled in an effort to anticipate, prevent, or monitor possible criminal activity on:

1. An individual who, based upon reasonable grounds, is believed to be involved in the actual or attempted planning, organization, financing, promotion, or commission of criminal acts or is believed to be involved in criminal activities with known or suspected criminal offenders.

2. A group, organization or business which, based on reasonable grounds, is believed to be involved in the actual or attempted planning, organization, financing, promotion, or commission of criminal acts, or of being illegally operated, controlled, financed, promoted, or infiltrated by known or suspected criminal offenders.

3. An incident in which sufficient articulable facts give a trained law enforcement or criminal investigative agency officer, investigator, or employee a basis to believe that a definable criminal activity or enterprise is, has been, or may be committed.

"Criminal intelligence file" does not include surveillance data as defined in Iowa Code section 692.1.

*"Criminal intelligence system"* means the arrangements, equipment, facilities, and procedures used for the receipt, storage, interagency exchange or dissemination, and analysis of criminal intelligence information.

*"Need to know"* is established if criminal intelligence information will assist a recipient in anticipating, investigating, monitoring, or preventing possible criminal activity or if criminal intelligence information is pertinent to protecting a person or property from a threat of imminent serious harm.

*"Noncriminal identifying information"* means information about the characteristics and associations of an identifiable person suspected of being involved in criminal activity.

*"Reasonable grounds"* means information that establishes sufficient articulable facts that give a trained law enforcement or criminal investigative agency officer, investigator, or employee a reasonable basis to believe that a definable criminal activity or enterprise is, has been, or may be committed.

*"Right to know"* is established when a recipient of criminal intelligence information is legally permitted to receive intelligence data or an intelligence assessment.

*"Surveillance data"* means information on individuals, pertaining to participation in organizations, groups, meetings or assemblies, where there are no reasonable grounds to suspect involvement or participation in criminal activity by any person. Noncriminal identifying information does not constitute surveillance data.

*"Threat of imminent serious harm"* means a credible impending threat to the safety of a person or property. A threat of imminent serious harm justifies the dissemination of intelligence data or an intelligence assessment for the purpose of protecting a person or property from the threat.

**661—81.2(692) Iowa law enforcement intelligence network (LEIN) information system.**

**81.2(1)** *LEIN information system.* The Iowa law enforcement intelligence network (LEIN) information system is the statewide interjurisdictional intelligence system maintained and operated by the intelligence bureau of the department of public safety, for the regular interagency exchange of criminal intelligence files. Criminal intelligence files contained in the LEIN information system may be disseminated or redisseminated by the intelligence bureau of the department of public safety, consistent with Iowa Code chapter 692.

**81.2(2)** *Direct computer access.* The commissioner of public safety may authorize a peace officer, criminal justice agency, or state or federal regulatory agency to access the LEIN information system directly via a remote computer terminal, provided that the authorized individual or agency follows

approved procedures regarding receipt, maintenance, dissemination, submission and security of information, and related training. Authorization may be provided in writing or electronically.

**81.2(3)** *Termination of authorization for direct computer access.* The commissioner of public safety may, at any time for good cause, terminate authorization for direct, remote computer access to the LEIN information system which has been previously approved. An individual or agency whose authorization to directly access the LEIN information system via remote computer has been terminated may appeal the termination in accordance with procedures for contested cases established in 661—Chapter 10.

**81.2(4)** *Reinstatement of authorization for direct computer access.* Any user whose authorization for direct, remote computer access to the LEIN information system has been terminated may apply for the authorization for access to be reinstated, provided that the problem which led to the termination has been corrected.

**81.2(5)** *Applications for direct computer access.* To apply for direct, remote computer access to the LEIN information system or to obtain further information about the LEIN information system, a person shall contact the Intelligence Bureau, Iowa Department of Public Safety, Wallace State Office Building, Des Moines, Iowa 50319, or by electronic mail via the Internet at intinfo@dps.state.ia.us.

**81.2(6)** *Entry of information—restrictions.* Information about the political, religious, racial, or social views, associations, activities or sexual orientation of any individual shall not be entered into the LEIN information system unless such information constitutes noncriminal identifying information or is relevant to an investigation of criminal conduct or activity involving an identifiable individual.

**81.2(7)** *Entry of information—conformance with applicable law.* No information that is deemed unreliable because it has been obtained in violation of any applicable federal, state, or local law or ordinance, or these rules, may be entered into the LEIN information system.

**81.2(8)** *Dissemination.* Intelligence data from the LEIN information system may be disseminated only to peace officers, criminal justice agencies, or state or federal regulatory agencies. Intelligence data from the LEIN information system may be disseminated only when there is a right to know and a need to know in the performance of a law enforcement activity. Intelligence data from the LEIN information system shall not be disseminated to any user whose authorization to access the LEIN information system has been terminated and has not been reinstated.

EXCEPTION: Intelligence assessments may be disseminated to any agency or organization for an official purpose or to a person in order to protect a person or property from the threat of imminent serious harm as defined in rule 661—81.1(692).

**81.2(9)** *Redissemination of intelligence data.* An agency, organization, or person receiving intelligence data from the department pursuant to Iowa Code chapter 692 may redisseminate the intelligence data only if authorized by the agency or peace officer who originally provided the data and if the data is for an official purpose in connection with the prescribed duties of the recipient. If the agency, organization, or person receiving the information is not a peace officer, criminal or juvenile justice agency, or state or federal regulatory agency, redissemination is allowed only if such redissemination is for an official purpose and if the information is redisseminated in order to protect a person or property from the threat of imminent serious harm. The department may also place restrictions on the redissemination by the agency, organization, or person receiving the intelligence data. Any agency, organization, or person who redisseminates intelligence data pursuant to Iowa Code chapter 692 must maintain a list of the agencies, organizations, and persons receiving the intelligence data and the purpose of the redissemination. Intelligence data must be maintained separately from and should not be included in any form in any investigative or prosecutorial files.

**81.2(10)** *Redissemination of intelligence assessment.* An agency, organization, or person receiving an intelligence assessment from the department pursuant to Iowa Code chapter 692 may redisseminate the intelligence assessment only if authorized by the department and only if the redissemination is for an official purpose in connection with the prescribed duties of the recipient. If the agency, organization, or person receiving the intelligence assessment is not a peace officer, criminal or juvenile justice agency, or state or federal regulatory agency, redissemination is allowed only if such redissemination is to protect a person or property from the threat of imminent serious harm. The department may also place restrictions on the redissemination by the agency, organization, or person receiving the

intelligence assessment. Any agency, organization, or person who redisseminates an intelligence assessment pursuant to Iowa Code chapter 692 must maintain a list of the agencies, organizations, and persons receiving the intelligence assessment and the purpose of the redissemination. An agency, organization, or person who redisseminates information without proper authorization may be prohibited from receiving further intelligence assessments.

**661—81.3(692) Criminal intelligence file security.** The intelligence bureau of the department of public safety shall adopt administrative, technical, and physical safeguards, including audit trails, to ensure against unauthorized access and against intentional or unintentional damage to the LEIN information system. These safeguards shall include, but are not limited to, the following:

**81.3(1)** Records indicating who has been given the information, the reason for release of information, and the date of any dissemination shall be maintained until the information has been purged.

**81.3(2)** Criminal intelligence files shall be labeled to indicate security level and identities of submitting agencies and submitting individual.

**81.3(3)** Where appropriate, effective and technologically advanced computer software and hardware designs shall be implemented to prevent unauthorized access.

**81.3(4)** Any access to criminal intelligence files and computing facilities in which the files are stored shall be restricted to authorized personnel.

**81.3(5)** Criminal intelligence files shall be stored in such a manner that the files cannot be modified, destroyed, accessed, purged, or overlaid in any fashion by unauthorized personnel.

**81.3(6)** Computer systems on which criminal intelligence files are stored shall be programmed to detect, reject, and record any unauthorized attempt to access, modify, or destroy criminal intelligence files or to otherwise penetrate the security safeguards on such a system.

**81.3(7)** Access to any information required to gain authorized access to criminal intelligence files, including access codes and passwords, shall be restricted only to personnel authorized to access these files. The intelligence bureau shall ensure that criminal intelligence files remain confidential when specific agreements are entered into with individuals or organizations that provide computer or programming support to the agency.

**81.3(8)** Procedures shall be adopted to protect criminal intelligence files from unauthorized access, theft, sabotage, fire, flood, wind, and natural or other disasters.

**81.3(9)** Procedures shall be adopted which establish the right of the intelligence bureau to screen and, if appropriate, reject for employment any personnel who would, if hired, have access to criminal intelligence files.

**81.3(10)** Procedures shall be established which allow the removal or transfer, based on good cause, of any existing employees from positions in which they have access to criminal intelligence files.

**81.3(11)** Any compromise, or suspected compromise, of information that would allow unauthorized access into criminal intelligence files shall be reported without delay and, in any event, by the end of the next business day, to a supervisor within the intelligence bureau of the department of public safety.

**81.3(12)** Any compromise, or suspected compromise, of information contained in criminal intelligence files shall be reported without delay and, in any event, by the end of the next business day, to a supervisor within the intelligence bureau of the department of public safety.

**661—81.4(692) Review of criminal intelligence files—purging.**

**81.4(1)** The intelligence bureau of the department of public safety shall regularly review the information in criminal intelligence files for reclassification or purging. Decisions to retain, reclassify, or purge criminal intelligence files shall:

*a.* Ensure that the information is current, accurate and relevant to the needs of the agency.

*b.* Safeguard individual privacy interests protected by federal and state laws.

*c.* Ensure that security classifications remain appropriate.

**81.4(2)** Information that is misleading, unreliable, or no longer useful shall be purged or reclassified when necessary, without delay and, in any event, within one business day of the discovery that the

information is misleading, unreliable, or no longer useful. Any person or agency to which the criminal intelligence file was disseminated shall be notified of the reclassification or purge.

**81.4(3)** All information shall be reviewed within a five-year period of its submission to ensure compliance with subrule 81.4(1).

**81.4(4)** All information retained as a result of a review shall reflect the name of the reviewer, date of review, and an explanation of the decision to retain.

**81.4(5)** Information that is not retained in a criminal intelligence file after a review shall be deleted from the LEIN information system.

**661—81.5(692) Subpoenas and court orders.** Any agency or individual shall notify the department of public safety in writing without delay and, in any event, by the end of the next business day of the receipt of any subpoena, court order, request for production, or other legal process demanding the production of a criminal intelligence file, so that the department has an opportunity to make a timely resistance.

These rules are intended to implement Iowa Code chapter 692.

[Filed 10/19/06, Notice 9/13/06—published 11/8/06, effective 1/1/07]

# CHAPTER 82
Reserved

# CHAPTER 83
# IOWA SEX OFFENDER REGISTRY
[Prior to 2/16/05, see 661—8.301 to 8.305]

**661—83.1(692A) Sex offender registry established.** The Iowa sex offender registry, as authorized by Iowa Code chapter 692A, is hereby established in the division of criminal investigation.

**661—83.2(692A) Definitions.** The following definitions apply to rules 661—83.1(692A) to 661—83.5(692A).

**83.2(1)** *"Aggravated offense"* means a conviction for any of the following offenses:

*a.* Sexual abuse in the first degree in violation of Iowa Code section 709.2.

*b.* Sexual abuse in the second degree in violation of Iowa Code section 709.3.

*c.* Sexual abuse in the third degree in violation of Iowa Code section 709.4, subsection 1.

*d.* Lascivious acts with a child in violation of Iowa Code section 709.8, subsection 1.

*e.* Assault with intent to commit sexual abuse in violation of Iowa Code section 709.11.

*f.* Burglary in the first degree in violation of Iowa Code section 713.3, subsection 1, paragraph *"d."*

*g.* Kidnapping, if sexual abuse as defined in Iowa Code section 709.1 is committed during the offense.

*h.* Murder, if sexual abuse as defined in Iowa Code section 709.1 is committed during the offense.

*i.* Criminal transmission of human immunodeficiency virus in violation of Iowa Code section 709C.1, subsection 1, paragraph *"a."*

**83.2(2)** *"Convicted"* or *"conviction"* means a guilty verdict in a criminal case or an adjudication of delinquency in juvenile court for an offense specified in these rules or in Iowa Code chapter 692A as requiring registration with the Iowa sex offender registry. For purposes of these rules, "convicted" or "conviction" includes deferred judgments, deferred sentences, and acquittals by reason of insanity, and adjudications of delinquency of persons whose juvenile court records have been sealed under Iowa Code section 232.150.

**83.2(3)** *"Criminal or juvenile justice agency"* means an agency or department of any level of government or an entity wholly owned, financed, or controlled by one or more such agencies or departments which performs as its principal function the apprehension, prosecution, adjudication, incarceration, or rehabilitation of criminal or juvenile offenders.

**83.2(4)** *"Criminal offense against a minor"* means a violation of any of the following sections of the Code of Iowa or equivalent laws of the United States or of any other jurisdiction, if committed against a minor:

*a.* Enticing a person into a brothel or detaining a person in a brothel by force, intimidation, or false pretenses in violation of Iowa Code section 709.7.

*b.* Kidnapping of a minor.

*c.* False imprisonment of a minor.

*d.* Any indictable offense involving sexual conduct directed toward a minor:

(1) Stalking in violation of Iowa Code section 708.11, subsection 3, paragraph *"b,"* subparagraph (3), if the offense is sexually motivated.

(2) Any violation of the following Iowa Code sections, subsections, and paragraphs: 709.3(2), 709.4(2)*"b,"* 709.4(2)*"c,"* 709.8, 709.12, or 709.14.

(3) Any violation of the following Iowa Code sections with a minor victim: 709.2, 709.3, 709.4, 709.9, 709.15, 709.16, or 726.2; violations of section 698.1 (Iowa Code, 1975), 704.1 (Iowa Code, 1975), or 705.2 (Iowa Code, 1975).

*e.* Solicitation of a minor to engage in an illegal sex act; any violation of Iowa Code section 709A.6 involving an offense which would warrant registration.

*f.* Enticing away a child in violation of Iowa Code section 710.10.

*g.* Use of a minor in a sexual performance: any violation of Iowa Code section 728.12(1).

*h.* Sexual exploitation of a minor in violation of Iowa Code section 728.12, subsection 2 or 3.

*i.* Solicitation of a minor to practice prostitution: any violation of Iowa Code section 725.3(2).

*j.* Incest in violation of Iowa Code section 726.2, when committed against a minor.

*k.* Dissemination or exhibition of obscene materials to minors:

(1) Any violation of Iowa Code section 728.2 or 728.15.

(2) Any violation of Iowa Code section 728.4 if delivery is to a minor.

*l.* Admitting minors to premises where obscene material is exhibited: any violation of Iowa Code section 728.3.

*m.* An attempt to commit sexual abuse of a minor: any violation of Iowa Code section 709.11; also, any violation of section 698.4 (Iowa Code, 1975).

**83.2(5)** *"Full-time or part-time"* means a period of time exceeding 14 days or an aggregate period of time exceeding 30 days during any calendar year pursuant to 42 U.S.C. § 14071(a)(3)(F).

**83.2(6)** *"Offender"* means a person who is required to register with the Iowa sex offender registry.

**83.2(7)** *"Other relevant offenses"* means any of the following offenses:

*a.* Telephone dissemination of obscene materials in violation of Iowa Code section 728.15.

*b.* Rental or sale of hard-core pornography in violation of Iowa Code section 728.4.

*c.* Indecent exposure in violation of Iowa Code section 709.9.

*d.* Incest committed in violation of Iowa Code section 726.2 against a dependent adult, as defined in Iowa Code section 235B.2.

*e.* A criminal offense committed in another jurisdiction which would constitute an indictable offense under paragraphs *"a"* through *"d"* if committed in this state.

**83.2(8)** *"Registrant"* means a person who is currently registered with the Iowa sex offender registry.

**83.2(9)** *"Relevant information"* means information including, but not limited to, offender's name, offender's address or addresses, a photograph or photographs of the offender, locations frequented by the offender, criminal history information from the registry, physical descriptors of the offender, ages and genders of victims, results of risk assessments, and other information deemed relevant by the department.

**83.2(10)** *"Residence"* means the place where a person sleeps, which may be more than one location, and may be mobile or transitory, including a shelter or group home.

**83.2(11)** *"Sexual exploitation"* means sexual exploitation by a counselor or therapist in violation of Iowa Code section 709.15.

**83.2(12)** *"Sexually violent offense"* means any of the following indictable offenses:

*a.* Sexual abuse as defined in Iowa Code section 709.1.

*b.* Assault with intent to commit sexual abuse in violation of Iowa Code section 709.11.

*c.* Sexual misconduct with offenders in violation of Iowa Code section 709.16.

*d.* Any of the following offenses, if the offense involves sexual abuse or attempted sexual abuse: murder, attempted murder, kidnapping, burglary, or manslaughter.

*e.* A criminal offense committed in another jurisdiction which would constitute an indictable offense under paragraphs *"a"* through *"d"* of this subrule if committed in this state.

**83.2(13)** *"Sexually violent predator"* means a person who has been convicted of an offense under the laws of this state or of another state which would qualify the person as a sexually violent predator under the federal Violent Crime Control and Law Enforcement Act of 1994, 42 U.S.C. § 14071(a)(3)(B), (C), (D), and (E).

**661—83.3(692A) Forms and procedures.** The following forms and procedures are prescribed for use with the Iowa sex offender registry. Supplies of these forms may be obtained by contacting the Iowa sex offender registry at the division of criminal investigation.

**83.3(1)** *Notification.* Form DCI-144, Notification of Registration Requirement, which notifies offenders of their duty to register with the Iowa sex offender registry, shall be provided to persons identified as being required to register. Failure to provide offenders with Form DCI-144 does not relieve offenders of their duty to register with the Iowa sex offender registry.

**83.3(2)** *Registration.*

*a.* Form DCI-145, Sex Offender Registration, shall be completed by or on behalf of each offender and submitted to the sheriff of the county in which the offender will be residing and to the division of

criminal investigation, in order to satisfy the registration requirements of the Iowa sex offender registry. This form shall also be completed by or on behalf of each offender and submitted to the sheriff of the county in which the offender will be a student, be employed, or be engaging in a vocation on a full-time or part-time basis at an institution of higher education, in order to satisfy the registration requirements of Iowa Code section 692A.3A.

*b.* Form DCI-145 shall be used to report changes of residence, telephone number, name of registrant, or change in status as a student, employee, or practicing a vocation at an institution of higher education. A completed copy of Form DCI-145 shall be submitted by the registrant to the sheriff of the county of residence each time the registrant's place of residence, telephone number, or name changes within five days of the change of residence, telephone number, or name, whether within or outside the state of Iowa. A completed copy of Form DCI-145 shall be submitted by the registrant to the sheriff of the county in which the registrant is a student, employee, or practicing a vocation on a full-time or part-time basis at an institution of higher education within five days of the registrant's becoming a student, employee, or engaged in a vocation at the institution of higher education. The original of each completed Form DCI-145 shall be forwarded to the division of criminal investigation by the registering agency within three days of receiving the completed form.

If a registrant moves from one county to another, the registrant shall submit copies of completed Form DCI-145 reporting the change of residence to the sheriff of the prior county of residence and the sheriff of the new county of residence. The sheriff of the new county of residence shall be responsible for transmitting a copy of completed Form DCI-145 to the Iowa sex offender registry.

When the department receives notification that a registrant has changed residence to a location outside of Iowa, the department shall notify the registering state agency in the registrant's new state of residence of the registrant's name, new address, and telephone number. Upon notification of the appropriate out-of-state agency, the department shall remove the registrant from the active registry. The registrant shall not be required to submit annual or quarterly verifications of address while residing outside of Iowa, provided that the registrant is not a student at, employed by, or engaged in a vocation at an institution of higher education in Iowa. The department shall maintain the registrant's file in the event the registrant establishes a residence in Iowa or becomes a student, employee, or practices a vocation at an institution of higher education in Iowa in the future. The department may also maintain the file for any other purpose.

*c.* Upon initial submission of Form DCI-145, the form shall be accompanied by current photographs and fingerprints of the offender. Current photographs of the registrant shall accompany submission of Form DCI-145 upon each subsequent submission of Form DCI-145 if a current photograph of the registrant has not been submitted within the year prior to the current submission of Form DCI-145.

*d.* A list of all registrants within a county may be provided by the division of criminal investigation to the county sheriff.

**83.3(3)** *Annual verification.* Form DCI-146, Annual Verification of Address, shall be mailed annually by the division of criminal investigation to each registrant at the last address known to the registry during the month of original registration. Form DCI-146 shall be returned by the registrant to the division of criminal investigation within ten days of receipt. Form DCI-146 shall be mailed to the registrant in an envelope on which it is clearly stated that it is to be returned to the division of criminal investigation if the addressee no longer resides at the address indicated and that Iowa law prohibits its being forwarded.

EXCEPTION: Form DCI-146 shall be mailed quarterly by the division of criminal investigation to each registrant who is a sexually violent predator to the last address known to the registry and shall be completed and returned to the division of criminal investigation by the registrant within ten days of receipt.

Each registrant shall report to the sheriff of a county of residence of the registrant within ten days of receipt of the annual verification form. The sheriff shall take a current photograph of the registrant and shall submit the photograph to the registry.

The sheriff of any county of residence of a registrant may, at any time, instruct the registrant to report to the sheriff's office for the purpose of the taking of a current photograph. Such instructions shall be mailed to the registrant at the registrant's current address of registration. The registrant shall report to the sheriff's office within ten days of receiving such instructions. The sheriff shall submit the current photograph of the registrant to the registry.

**83.3(4)** *Application for determination.* Form DCI-148, Application for Determination, shall be completed by a registrant to initiate a request that the department review whether one or more offenses of which the registrant has been convicted require registration with the Iowa sex offender registry, whether the time period during which the registrant is required to register has expired, or whether the registrant is exempt from the placement of information on the sex offender registry Web site. A registrant who submits a completed copy of Form DCI-148 for review shall provide with it copies of any sentencing or adjudicatory orders related to each offense for which a determination of whether registration is required is being requested. The completed application (Form DCI-148) shall specify the exact grounds for the application and shall include a statement of any additional facts or law which the registrant intends to present to the department in support of the application. Failure to submit any of the required information shall constitute grounds for denial of the application. If the application sets forth an issue of fact which cannot be evaluated based upon the record of convictions, sentencing and adjudicatory orders, relevant statutory provisions, and other records provided, and is material to the determination, the commissioner may refer the matter to an administrative law judge or presiding officer for a contested case hearing.

**83.3(5)** *Decision of determination.* Form DCI-149, Decision of Determination, shall be used by the division of criminal investigation to notify a registrant who has submitted a request for determination (Form DCI-148) of the results of that review. A completed Form DCI-149 shall be mailed to any registrant who has filed a completed Form DCI-148 within 90 days of the receipt by the division of criminal investigation of the completed Form DCI-148 and all required supporting documents. A decision of determination shall be signed by the commissioner and shall constitute final agency action for the purposes of Iowa Code chapter 17A.

If an administrative law judge or presiding officer has been assigned to hold a hearing regarding an application for determination, the administrative law judge or presiding officer shall prepare a proposed decision of determination. The proposed decision of determination shall be reviewed by the commissioner who may uphold or modify the proposed decision of determination and shall then sign a final decision of determination. The final decision of determination shall constitute final agency action for the purposes of Iowa Code chapter 17A.

**83.3(6)** *Request for information.* Requests for information about whether a specific individual is registered shall be made to a county sheriff or local police department and may be made in person, by telephone, or in writing. Form DCI-150, Request for Registry Information, may be used by a member of the public to request information about whether a specific person is registered with the Iowa sex offender registry. A person requesting information about whether a specific individual is registered with the Iowa sex offender registry may submit a completed copy of Form DCI-150 to a sheriff or police department. If a request for information is submitted using Form DCI-150, a separate form shall be submitted for each person about whom information is being requested.

**83.3(7)** *Confidential records.* Completed forms filled out pursuant to rules 661—83.1(692A) through 83.5(692A) are confidential records that shall not be released to the public.

**661—83.4(692A) Availability of records.**

**83.4(1)** *Release of information to criminal or juvenile justice agencies.* The department may, without restriction, release information regarding any registrant to any criminal or juvenile justice agency, an agency of the state of Iowa, any sex offender registry of another state, or the federal government.

**83.4(2)** *Sex offender registry Web site.* The department shall place information regarding each registrant on the registry Web site (www.iowasexoffenders.com), except that information regarding any registrant for whom the sole basis of registration is a conviction or convictions for a violation or violations of Iowa Code section 709.4, subsection 2, paragraph *"c,"* subparagraph (4), and whose

offense was committed when the offender was under 20 years of age, shall not be placed on the Web site. Information regarding a registrant placed on the sex offender registry Web site may include any relevant information.

**83.4(3)** *Release of information by a criminal or juvenile justice agency.* A criminal or juvenile justice agency may provide relevant information from the sex offender registry to the following:

*a.* A criminal or juvenile justice agency, an agency of the state, any sex offender registry of another state, or the federal government.

*b.* The general public, including public and private agencies, organizations, public places, child care facilities, religious and youth organizations, neighbors, neighborhood associations, community meetings, and employers. Registry information may be distributed to the public through printed materials, visual or audio press releases, radio communications, or a criminal or juvenile justice agency's Web site.

*c.* The administrative office of a school district in which the person required to register resides and any private school near the person's residence.

**83.4(4)** *List of registrants in county.* Any county sheriff shall provide access to the list of all registrants within the county in which the sheriff has jurisdiction to any person who requests such a list; however, records of persons protected under 18 U.S.C. Section 3521 shall not be disclosed.

**83.4(5)** *Release of information in response to individual request.* A sheriff or police department that receives a request for information about whether a specific individual is registered or not shall inquire of the division of criminal investigation via the Iowa on-line warrants and articles (IOWA) system as to whether the person about whom information was requested is registered with the Iowa sex offender registry. If the division of criminal investigation notifies the sheriff or police department that the person about whom inquiry is made is not on the registry, the sheriff or police department shall so notify the person who submitted the request. If the division of criminal investigation notifies the sheriff or police department that the person about whom inquiry was made is a registrant with the Iowa sex offender registry, the sheriff or police department shall notify the person making the inquiry that the person about whom the inquiry was made is a registrant and may provide the requester with the relevant information regarding the registrant.

**83.4(6)** *Submission of information to the National Sex Offender Registry.* The division shall submit sex offender registry data as required to the National Sex Offender Registry of the Federal Bureau of Investigation.

**83.4(7)** *Single contact repository.* The division shall perform a search of the sex offender registry for information about an individual, based on a request submitted through the single contact repository established pursuant to Iowa Code section 135C.33. The information provided from the registry shall be limited to whether the identified person is registered.

**83.4(8)** *No identification of victims.* Any release of information regarding any registrant, other than to criminal or juvenile justice agencies, shall not identify any victim of the registrant.

**83.4(9)** *Assessment of risk.* The division shall perform assessments upon persons required to register as provided in 2005 Iowa Acts, House File 619, section 30, and rules adopted pursuant thereto by the department of corrections. Results of the assessment shall be communicated to criminal and juvenile justice agencies for law enforcement, prosecution or public notification purposes. Assessment results shall be disclosed as other relevant information.

**661—83.5(692A) Expungement of records.**

**83.5(1)** *Expungement upon reversal of conviction.* Upon receipt of a certified copy of a court order reversing a conviction which forms the basis for a registrant's being required to register, the division of criminal investigation shall expunge the registration, provided that the registrant has been convicted of no other offense requiring registration.

**83.5(2)** *Expungement upon expiration of registration period.* The division of criminal investigation shall expunge a registrant's registration upon expiration of the period during which the registrant is

required to register, provided that the registrant has not subsequently been convicted of an offense that would require registration.

These rules are intended to implement Iowa Code chapter 692A.

[Filed 1/26/05, Notice 9/29/04—published 2/16/05, effective 4/1/05]
[Filed emergency 6/28/05—published 7/20/05, effective 7/1/05]
[Filed 11/3/05, Notice 7/20/05—published 11/23/05, effective 1/1/06]

CHAPTERS 84 to 88
Reserved

# CHAPTER 89
# MISSING PERSONS
[Prior to 11/22/06, see 661—Ch 19]

**661—89.1** to **89.99** Reserved.

## DIVISION I
## MISSING PERSON INFORMATION CLEARINGHOUSE

**661—89.100(694) Missing person information clearinghouse.** The missing person information clearinghouse is established in the division of criminal investigation. The clearinghouse provides a program for compiling, coordinating, and disseminating information, in order to locate missing persons through public awareness and cooperation, and to educate law enforcement officers and the general public about the issues related to missing persons.

**661—89.101(694) Administration of missing person information clearinghouse.** The division of criminal investigation administers the missing person information clearinghouse, and all questions, comments, or requests for, or submission of, information should be directed to the clearinghouse at the division of criminal investigation. Inquiries by mail should be addressed to: Missing Person Information Clearinghouse, Division of Criminal Investigation, Iowa Department of Public Safety, Wallace State Office Building, Des Moines, Iowa 50319. Inquiries by electronic mail should be addressed to mpicinfo@dps.state.ia.us.

**661—89.102(694) Definitions.** The following definitions apply to rules 661—89.100(694) through 661—89.107(694).

*"Approved"* means having met the criteria set forth by the department of public safety.

*"Clearinghouse"* means the missing person information clearinghouse in the division of criminal investigation, Iowa department of public safety.

*"Commissioner"* means the commissioner of the Iowa department of public safety or the commissioner's authorized designee.

*"Department"* means the Iowa department of public safety.

*"Missing person"* means an individual having temporary or permanent residence in Iowa, or who is believed to be in Iowa, whose location has not been determined, who has been reported as missing to a law enforcement agency, and who:

1. Is physically or mentally disabled.
2. Is missing under circumstances indicating that the missing person may be in danger.
3. Is missing under circumstances indicating that the missing person's disappearance was not voluntary.
4. Is under the age of 21.

*"Missing person report"* means a report filed by a law enforcement agency or a private individual with the clearinghouse on a missing person report form.

*"Missing person report form"* means a form designated by the department of public safety for use by private citizens and law enforcement agencies to report missing person information to the missing person information clearinghouse. Law enforcement agencies may use forms other than the form designated by the department of public safety to submit missing person information to the clearinghouse, provided that all of the information requested on the designated form is provided.

*"Prevention and education materials"* means those materials that are designed to aid in the prevention of child abduction and to address risks of the exploitation of missing children and that are used in conjunction with a prevention and education program.

*"Prevention and education programs"* means those programs which have as their primary purpose the prevention of child abduction and of the exploitation of missing children.

*"Programs and materials registry"* or *"registry"* means a list of prevention and education materials and programs approved by the department.

**661—89.103(694) Program information.**

**89.103(1)** A toll-free telephone line (1-800-346-5507) is available 24 hours a day, seven days a week, to collect and disseminate information concerning missing persons in Iowa.

**89.103(2)** Current information on Iowa missing persons, including photographs when available, is available on the Web site of the clearinghouse.

**89.103(3)** After filing a complaint of a missing person with a law enforcement agency, the person filing the complaint may submit information to the clearinghouse on a missing person report form, which may be obtained from the clearinghouse or any law enforcement agency.

**89.103(4)** After a missing person complaint has been filed with a law enforcement agency, any person may submit information on a missing person report form to the clearinghouse.

**661—89.104(694) Prevention and education programs and materials.**

**89.104(1)** The clearinghouse shall maintain a registry of approved prevention and education programs and materials regarding missing and runaway children.

**89.104(2)** Any person or group wishing to submit prevention and education programs and materials for approval and inclusion in the registry may contact the clearinghouse in order to request information on submitting prevention and education programs and materials for approval.

**89.104(3)** The clearinghouse shall consider prevention and education programs and materials submitted for approval only upon receipt by the clearinghouse of all specified materials. The person or group submitting prevention and education programs or materials to the clearinghouse shall be notified of approval or rejection of the programs or materials on the registry. No prevention and education programs or materials shall be represented as having been approved by the clearinghouse or the department unless they have been approved and placed on the registry.

**89.104(4)** The following criteria shall govern approval of education and prevention materials and programs by the department:

*a.* A prevention or education program must contain all elements deemed necessary to adequately cover the subject matter.

*b.* Prevention and education programs and materials shall not contain any elements determined to be offensive or pornographic or which sensationalize the problem of missing persons.

*c.* Prevention and education programs and materials shall meet standards established by the department.

*d.* Prevention and education programs and materials which have been approved by the National Center for Missing and Exploited Children are deemed to be approved by the department.

**89.104(5)** Modifications to approved programs or materials shall be submitted to the clearinghouse for review and approval and shall not be represented as approved by the clearinghouse until such approval has been received.

**89.104(6)** Prevention or education programs or materials may be rejected for inclusion in the registry of approved prevention and education programs and materials if it is determined that materials utilized or content of the program is other than that which was submitted to the clearinghouse for approval, or if it is determined, based on current knowledge, that information provided in prevention and education programs and materials that have been approved previously is outdated or misleading.

**89.104(7)** Prevention or education programs or materials for which approval has been withdrawn by the clearinghouse shall be removed from the registry. The person or group that submitted the withdrawn program or material for consideration and approval shall be notified, if practicable.

**89.104(8)** If prevention or education programs or materials submitted to the clearinghouse are rejected for inclusion in the registry, or if the programs or materials previously approved are removed from the registry, the person or group that submitted the programs or materials to the clearinghouse may appeal the rejection or removal to the commissioner within 30 days of the date on which the clearinghouse notified the person or group of the rejection or withdrawal. A proceeding arising from this rule shall be a contested case and shall be subject to rules 661—10.301(17A) through 661—10.332(17A).

**89.104(9)** Any individual or group may contact the clearinghouse regarding prevention and education programs and materials to ascertain if a specific program or material is on the registry.

**89.104(10)** Any individual may file a complaint with the clearinghouse regarding prevention and education programs and materials on the registry. Complaints shall be directed to the clearinghouse in writing.

**661—89.105(694) Release of information.** Prevention and education materials and program information filed with the clearinghouse for review are open records. Information received by the department that pertains to a missing person, other than criminal investigative data, shall be open records unless deemed confidential pursuant to Iowa Code chapter 22, 692 or 694, or other provision of law.

**661—89.106(694) Dissemination.**

**89.106(1)** The clearinghouse shall distribute missing person information that contains the names, photographs, descriptions, and information related to the events surrounding the disappearance of missing persons through publication on the Missing Person Information Clearinghouse Web site. The law enforcement agency or person to contact if a missing person is located and the names of all located missing persons will be included in the information shown on the Web site.

NOTE: The Web site of the missing person information clearinghouse is http://www.iowaonline.state.ia.us/mpic/.

**89.106(2)** Each week the clearinghouse shall produce, update, and publish public service announcements on the clearinghouse Web site. A media outlet may request to receive the weekly public service announcement by electronic mail by subscribing to the electronic mail notification service available through the department Web site.

**661—89.107(694) Training.** The department shall develop training programs for law enforcement personnel and the general public.

**89.107(1)** Training for local law enforcement personnel shall include missing person reporting and legal procedures, tracking of missing persons, unidentified bodies, and criteria and procedures for AMBER alerts.

**89.107(2)** Training for the general public shall include information to assist in the prevention of child exploitation and kidnapping.

These rules are intended to implement Iowa Code section 694.10.

**661—89.108** to **89.199** Reserved.

DIVISION II
AMBER ALERT PROGRAM

**661—89.200(694) AMBER alert program.** The AMBER alert program is a cooperative effort of the department of public safety, the department of transportation, the lottery authority, the Iowa association of broadcasters, the Iowa state association of sheriffs and deputies, local law enforcement agencies, and the national weather service.

**661—89.201(694) Criteria.** An AMBER alert shall be issued by Iowa state patrol communications upon receipt of a request from a law enforcement agency, provided that the following criteria for issuance of an AMBER alert are met:

1. Law enforcement has confirmed that a person has been abducted, and an entry has been made into the Iowa On-line Articles and Warrants (I.O.W.A.) System identifying the person as missing.
2. The person who has been abducted is under the age of 18.
3. Law enforcement believes the circumstances surrounding the abduction indicate that the child is in danger of serious bodily injury or death.

4. There is enough descriptive information about the child, abductor, or suspect's vehicle to believe that an immediate broadcast alert will help.

The criteria should be interpreted broadly so as to protect the safety of the abducted child and to maintain the integrity of the AMBER alert program and criteria.

**661—89.202(694) Activation procedures.**

**89.202(1)** An Iowa AMBER alert shall be issued by Iowa state patrol communications upon receipt of a request from a participating law enforcement agency, provided that the criteria established in rule 661—89.201(694) are met.

**89.202(2)** In order to initiate an Iowa AMBER alert, a law enforcement agency shall submit by facsimile transmission a completed copy of the "State of Iowa AMBER Alert Notification Plan Facsimile Transmission Packet" to the Des Moines station of Iowa state patrol communications. If transmission to the Des Moines station is not feasible, transmission may be made to the Cedar Rapids station of Iowa state patrol communications.

**89.202(3)** Upon receipt by Iowa state patrol communications of a completed facsimile transmission packet and if the AMBER alert criteria established in rule 661—89.201(694) are met, an AMBER alert shall be transmitted via the Emergency Alert System (EAS) to Iowa broadcasters.

**89.202(4)** After initiation of an AMBER alert, additional information may be submitted by the participating law enforcement agency by facsimile transmission, electronic mail, or telephone.

**89.202(5)** After initiation of an AMBER alert, available information shall be posted on the Iowa AMBER alert Web site.

NOTE: The Web site of the Iowa AMBER alert program is at www.iowaamberalert.org.

**89.202(6)** The communications officer of the Iowa state patrol may direct the issuance of an Iowa AMBER alert, upon receiving a request to do so from another state in which an AMBER alert has been issued, provided that there is evidence that the abductor may be traveling with the abducted child to or through Iowa.

**89.202(7)** An Iowa AMBER alert shall terminate if the child who was abducted is located or if five hours have elapsed since the initiation of the alert. An alert may be renewed.

**89.202(8)** If an Iowa AMBER alert is requested and if the circumstances indicate that a person is missing, the information shall be transmitted promptly to the Iowa missing person information clearinghouse.

**661—89.203(694) Alternative alert if criteria are not satisfied.** If an AMBER alert has been requested and the criteria established in rule 661—89.201(694) are not satisfied, the department may issue a missing person alert or a missing child alert.

These rules are intended to implement Iowa Code chapter 694.

[Filed emergency 6/28/85—published 7/17/85, effective 7/1/85]
[Filed 1/10/86, Notice 7/17/85—published 1/29/86, effective 3/6/86]
[Filed 4/1/88, Notice 9/23/87—published 4/20/88, effective 5/25/88]
[Filed 4/13/90, Notice 12/13/89—published 5/2/90, effective 6/10/90]
[Filed 11/2/06, Notice 9/27/06—published 11/22/06, effective 1/1/07]

# CHAPTER 90
Reserved

# CHAPTER 91
# WEAPONS PERMITS

[Prior to 5/9/07, see rules 661—4.1(724) to 661—4.12(17A,724)]

**661—91.1(724) Definitions.** The following definitions apply to rules in this chapter:

*"Applicant"* means a person who is applying for a permit to acquire pistols or revolvers or to carry weapons.

*"Approved handgun training program"* means a handgun safety training program which includes qualifying on a firing range and which is offered or certified by one of the following organizations:

1. Iowa law enforcement academy.
2. National Rifle Association.
3. U.S. military or Iowa national guard.
4. Another organization approved by the commissioner.

*"Certified peace officer"* means a person who is certified by the Iowa law enforcement academy as having successfully completed a course of instruction for a peace officer that included a firearms training program and who is currently employed by an Iowa law enforcement agency which requires current certification.

*"Commissioner"* means the commissioner of the Iowa department of public safety or, as applicable, the commissioner's designee.

*"Completed fingerprint card"* means a standard fingerprint card with two sets (every existing finger and thumb) of fully rolled fingerprint impressions and all information required to check Federal Bureau of Investigation (FBI) and Iowa division of criminal investigation (DCI) records for any disqualifying criminal conviction.

*"Identification documentation for an Iowa resident"* means any of the following:

1. A driver's license or nonoperator identification card that contains a photograph of the person and that has been issued by the Iowa department of transportation; or
2. A motor vehicle license or nonoperator identification card that contains a photograph of the person and that has been issued by a state other than Iowa and at least one current document indicating Iowa residency including a residential lease agreement, utility bill, voter registration, tuition receipt for a college or university in Iowa, or other documentation that is acceptable to the issuing officer and that indicates the intent of the person's presence in Iowa is something other than merely transitory in nature; or
3. A document which contains the name, place of residence, date of birth and photograph of the holder issued by or under the authority of the United States, a state or a political subdivision of a state and which is of a type intended or commonly accepted for the purpose of identification of individuals and at least one current document indicating Iowa residency including a residential lease agreement, utility bill, voter registration, tuition receipt for a college or university in Iowa, or other documentation that is acceptable to the issuing officer and that indicates the intent of the person's presence in Iowa is something other than merely transitory in nature; or
4. A motor vehicle license or nonoperator identification card that contains a photograph of the person and that has been issued by a state other than Iowa and a document indicating that the person is a member of the United States armed forces on active duty and whose permanent duty station is located in Iowa; or
5. A driver's license or nonoperator identification card that contains a photograph of the person and that has been issued by the Iowa department of transportation and an immigration document containing the alien registration number (ARN) of a permanent resident alien or nonimmigrant alien and documentation indicating that the person has continuously resided in the state for at least 90 days prior to making application. A nonimmigrant alien shall also be required to display a valid hunting license issued in any state.

*"Identification documentation for a nonresident"* means a motor vehicle license or nonoperator identification card which has been issued by a state other than Iowa and which contains a photograph of the person to whom it was issued.

*"IOWA system"* means the Iowa on-line warrants and articles criminal justice information system operated by the Iowa department of public safety for use by law enforcement and criminal justice agencies in the exchange of criminal history and other criminal justice information.

*"NICS"* means the National Instant Criminal Background Check System established by the Federal Bureau of Investigation for the purpose of determining whether the transfer of a firearm to any person or the issuance of a firearms-related permit would be in violation of federal or state law. A NICS check shall include inquiries to the Iowa computerized criminal history database and the persons file of the Iowa on-line warrants and articles (IOWA) system.

*"Qualify on a firing range"* means to demonstrate proficiency with a handgun on a course of fire as part of an approved handgun training program.

*"State employee"* means a person whose need to go armed arises out of employment by the state of Iowa. "State employee" includes a railroad special agent as described in Iowa Code chapter 80.

**661—91.2(724) Forms.** The following forms, the use of which is required by provisions of this chapter, are provided by the commissioner and are available from the department of public safety or a sheriff:

1. Form WP0. For enrollment in a training program and for certification of the successful completion of the training program.
2. Form WP1. Professional permit to carry weapons.
3. Form WP2. Nonprofessional permit to carry weapons.
4. Form WP3. Application for annual permit to acquire pistols or revolvers.
5. Form WP4. Annual permit to acquire pistols or revolvers.
6. Form WP5. Application for permit to carry weapons.
7. Form WP6. Notification to a person holding a permit to carry weapons or an annual permit to acquire pistols or revolvers that the permit has been revoked.
8. Form WP7. Certified peace officer permit to carry weapons.
9. Form WP8. Wallet-size permit to carry weapons which includes, at a minimum, the name and date of birth of the permit holder and the type of permit. A professional permit to carry weapons shall state the nature of employment requiring the holder to go armed. A nonprofessional permit to carry weapons shall state the reason for issuance and any restrictions or limitations of the authority granted by the permit.
10. Form WP10. Reserve peace officer permit to carry weapons.

**661—91.3(724) Training programs.**

**91.3(1)** The Iowa Code requires any applicant for a permit to carry a weapon to successfully complete a training program designed to qualify persons in the safe use of firearms and requires that the commissioner approve all training programs.

**91.3(2)** The commissioner recognizes and accepts approved handgun training programs as defined in rule 661—91.1(724). Another program may be approved by the commissioner if it is substantially similar to or exceeds the requirements of an approved handgun training program.

**661—91.4(724) Application procedures for a permit to carry a weapon.**

**91.4(1)** A resident of Iowa who wishes to obtain or renew a permit to carry a weapon shall apply to the sheriff of the county of residence. The applicant shall:

*a.* Submit a fully and accurately completed application form;

*b.* Submit a certificate of completion of an approved handgun training program which includes qualifying on a firing range. This requirement may be waived on an application for renewal of a permit;

*c.* If so requested by the sheriff, submit two completed fingerprint cards;

*d.* Meet all the applicable requirements enumerated in Iowa Code chapter 724;

*e.* Comply with the applicable requirements of the United States Code, including 18 U.S.C. 921, et seq., also known as the Gun Control Act of 1968;

*f.* Pay the required fee; and

*g.* Display identification documentation for an Iowa resident as defined in rule 661—91.1(724). This requirement may be waived on an application for renewal of a permit.

**91.4(2)** The sheriff may use discretion in determining additional criteria for issuance of a permit pursuant to subrule 91.4(1). The sheriff may restrict or limit the authority granted by nonprofessional permits.

**91.4(3)** Prior to issuing a permit pursuant to subrule 91.4(1), the sheriff shall conduct a background investigation which includes, at a minimum, a NICS check run through the IOWA system.

**91.4(4)** A nonresident of Iowa, or a state employee who is required by employment to go armed, who wishes to obtain a permit to carry a weapon shall apply to the commissioner. The applicant shall:

*a.* Submit a fully and accurately completed application form;

*b.* Submit a certificate of completion of an approved handgun training program which includes qualifying on a firing range. This requirement may be waived on an application for renewal of a permit;

*c.* Submit two completed fingerprint cards. This requirement may be waived on an application for renewal of a permit;

*d.* Meet all the applicable requirements enumerated in Iowa Code chapter 724;

*e.* Comply with the applicable requirements of the United States Code, including 18 U.S.C. 921, et seq., also known as the Gun Control Act of 1968;

*f.* Pay the required fee; and

*g.* Display, as applicable, identification documentation for an Iowa resident or identification documentation for a nonresident as defined in rule 661—91.1(724). This requirement may be waived on an application for renewal of a permit.

**91.4(5)** The commissioner may use discretion in determining additional criteria for issuance of a permit pursuant to subrule 91.4(4). The commissioner may restrict or limit the authority granted by nonprofessional permits.

**91.4(6)** Prior to issuing a permit pursuant to subrule 91.4(4), the commissioner shall conduct a background investigation which includes, at a minimum, a NICS check run through the IOWA system.

**661—91.5(724) Firearm purchase or transfer—permit to acquire pistols or revolvers.**

**91.5(1)** The application for an annual permit to acquire pistols or revolvers shall be made to the sheriff of the county of the applicant's residence. The applicant shall:

*a.* Submit a fully and accurately completed application form;

*b.* If so requested by the sheriff, submit two completed fingerprint cards;

*c.* Meet all of the applicable requirements of Iowa Code chapter 724;

*d.* Comply with the applicable requirements of the United States Code, including 18 U.S.C. 921, et seq., also known as the Gun Control Act of 1968; and

*e.* Display identification documentation for an Iowa resident as defined in rule 661—91.1(724).

**91.5(2)** Prior to issuing a permit pursuant to subrule 91.5(1), the sheriff shall conduct a background investigation which includes, at a minimum, a NICS check run through the IOWA system.

**91.5(3)** An annual permit to acquire pistols or revolvers shall be issued to the applicant immediately upon determination by the sheriff that the applicant complies with statutory requirements.

**661—91.6(724) Reports and remittance to the state.**

**91.6(1)** Each sheriff shall remit to the commissioner, by the seventh working day of the month which follows the month in which one or more permits to carry a weapon were issued, information about such permits, including the permit holder's name, date of birth, NICS transaction number, type of permit issued and the portion of the fee to be remitted to the department as required by the Iowa Code. The reporting of issued permits to carry a weapon shall be on a form designated for that purpose.

**91.6(2)** Fees for each reporting period shall be remitted by the sheriff in the form of a check made payable to: Iowa Department of Public Safety.

**91.6(3)** A copy of the form revoking a permit to carry a weapon shall be sent to the commissioner by the sheriff within seven working days from the date the permit holder received notification of the permit revocation.

**661—91.7(724) Offensive weapons as collector's items—method of classification.** An offensive weapon, other than a machine gun, shall be classified by the commissioner as a collector's item when the firearm is so defined as a curio or relic in 27 CFR 478.11 as published April 1, 2006, in the Code of Federal Regulations.

These rules are intended to implement Iowa Code chapter 724.

[Filed 4/13/07, Notice 9/27/06—published 5/9/07, effective 7/1/07]

CHAPTERS 92 to 94
Reserved

# CHAPTER 95
# DISPOSITION OF SEIZED AND FORFEITED WEAPONS AND AMMUNITION

[Prior to 5/9/07, see rules 661—4.51(809A) to 661—4.59(809A)]

**661—95.1(809,809A) Definitions.** The following definitions apply to rules in this chapter:

*"Ammunition reference file"* means the physical collection of ammunition received, collected and maintained by the division of criminal investigation criminalistics laboratory for testing and evaluation purposes.

*"Firearms inventory"* means a listing of firearms received, collected, maintained, and disposed of by the division of criminal investigation criminalistics laboratory and of transactions regarding firearms completed by the laboratory. Firearms in the temporary custody of the laboratory for evidentiary examination are not included in the firearms inventory.

*"Firearms reference file"* means the physical collection of firearms received, collected and maintained by the division of criminal investigation criminalistics laboratory for comparison and identification purposes.

*"Law enforcement purpose"* means use by a peace officer in the execution of the officer's duties or use in training of peace officers or training offered by law enforcement agencies to peace officers or other persons.

**661—95.2(809,809A) Ammunition and firearms.** The division of criminal investigation criminalistics laboratory shall examine and evaluate all firearms and ammunition submitted to the laboratory pursuant to Iowa Code section 809A.17. All firearms submitted to the laboratory shall be evaluated and disposed of as provided in Iowa Code sections 809.21 and 809A.17 and these rules. Any ammunition submitted to the laboratory may be entered into the laboratory's ammunition reference file and may be utilized by the laboratory for testing and evaluation purposes.

**661—95.3(809,809A) Firearms inventory.** There is established a continuous firearms inventory in the division of criminal investigation criminalistics laboratory. All firearms transactions covered by any of the provisions noted herein, other than receipts and returns of weapons for evidentiary examination, shall be recorded as and made a part of the continuous firearms inventory. Each individual entry in the inventory shall be maintained for a period of no less than 20 years. Inventory entries which refer to firearms retained in the firearms reference file shall be maintained permanently.

**661—95.4(809,809A) Deposit of firearms in the firearms reference file.** There is established a division of criminal investigation criminalistics laboratory firearms reference file. Firearms submitted to the laboratory, other than firearms submitted solely for evidentiary examination, shall be evaluated as to their possible worth for testing and evaluation purposes. Any firearms deemed useful for such purposes shall be deposited in the firearms reference file.

**661—95.5(809,809A) Disposition of firearms (interstate).** Any firearm in the possession of the division of criminal investigation criminalistics laboratory pursuant to Iowa Code section 809A.17 which is not entered into the firearms reference file pursuant to the provisions of rule 661—95.4(809,809A) and which the commissioner of public safety deems appropriate for distribution to other crime laboratories may be offered to them. The transfer of a firearm shall be completed within one year of its evaluation.

**661—95.6(809A) Transfer of rifles and shotguns to the department of natural resources.** Any rifle or shotgun in the possession of the division of criminal investigation criminalistics laboratory pursuant to Iowa Code section 809A.17 which is not entered in the firearms reference file pursuant to rule 661—95.4(809,809A) or distributed to another crime laboratory pursuant to rule 661—95.5(809,809A) may be transferred to the Iowa department of natural resources for disposition pursuant to the rules of that department.

**661—95.7(809,809A) Disposition of firearms (intrastate).** Any firearm not entered in the firearms reference file pursuant to rule 661—95.4(809,809A) and still in the possession of the division of criminal investigation criminalistics laboratory pursuant to Iowa Code section 809A.17, subsequent to the procedures set out in rules 661—95.5(809,809A) and 661—95.6(809A), shall be evaluated for usefulness to Iowa law enforcement agencies. Any firearm which is deemed suitable for law enforcement purposes may be distributed to an Iowa law enforcement agency which has made a request for such firearm. This distribution shall be made in accordance with the reasonable needs of the requesting agency as determined by the commissioner of public safety. Any firearm received by a law enforcement agency pursuant to this rule is for the internal use of the receiving agency and may not be resold or otherwise distributed outside of the receiving agency, other than to be returned to the division of criminal investigation criminalistics laboratory.

**661—95.8(809,809A) Final disposition and destruction of firearms.** All firearms in the possession of the division of criminal investigation criminalistics laboratory pursuant to Iowa Code section 809A.17 which are not disposed of by the procedures provided in rules 661—95.2(809,809A) through 661—95.7(809,809A) shall be destroyed. Destruction shall be accomplished by grinding and chopping at a scrap metal facility or meltdown at a suitable foundry operation. All destruction shall be supervised and conducted by the staff of the division of criminal investigation criminalistics laboratory. Documentation of the destruction of the firearms shall be made in the firearms inventory.

**661—95.9(809,809A) Claims.** Any disputed claim of ownership or right of possession of a firearm or of ammunition subject to rules 661—95.1(809,809A) through 661—95.8(809,809A) shall be adjudicated in accordance with the procedures regarding contested cases set forth in 661—Chapter 10.

**661—95.10(809,809A) Disposition of explosives.** Any law enforcement agency in possession of forfeited explosives shall contact the arson and explosives bureau of the fire marshal division for instructions and shall follow the instructions received from the fire marshal division for the disposition of the forfeited explosives.

**661—95.11(809,809A) Disposition of weapons other than firearms and explosives.** Any law enforcement agency in the possession of a forfeited weapon other than a firearm, ammunition, or explosives may contact the division of criminal investigation criminalistics laboratory for instructions regarding the disposition of the forfeited weapons.

These rules are intended to implement Iowa Code sections 809.21 and 809A.17.

[Filed 4/13/07, Notice 9/27/06—published 5/9/07, effective 7/1/07]

CHAPTERS 96 to 120
Reserved

# CHAPTER 121
# BAIL ENFORCEMENT, PRIVATE INVESTIGATION, AND PRIVATE SECURITY BUSINESSES

[Prior to 4/20/88, see Public Safety Department [680] Ch 2]
[Prior to 11/23/05, see 661—Ch 2]

**661—121.1(80A) Licensing.** The administrative services division shall administer the bail enforcement, private investigation and private security statute. Any questions, comments, information, requests for information, or application for a license or an identification card should be directed to the Department of Public Safety, Program Services Bureau, Wallace State Office Building, Third Floor, Des Moines, Iowa 50319-0045, or, with the exception of applications, by electronic mail via the Internet to piinfo@dps.state.ia.us.

**661—121.2(80A) Definitions.** As used in this chapter unless the context otherwise requires:

*"Aggravated misdemeanor"* means an offense so defined in the Iowa Code or an offense committed in another jurisdiction with a penalty of imprisonment for two years or more.

*"Applicant"* means any person applying to the commissioner for a license or a permanent identification card.

*"Background investigation"* means the actions taken by the department to verify that the applicant for a license or employee identification card meets the requirements. Such actions include, but are not limited to, inquiries to the Iowa on-line warrants and articles (IOWA) criminal justice information system for outstanding arrest warrants, active protection orders, sex offender registry records and Iowa criminal history records. A background investigation shall also include the submission of fingerprints of the applicant to the FBI for a nationwide criminal history record check.

*"Bail enforcement agent"* means a person engaged in the bail enforcement business, including licensees and persons engaged in the bail enforcement business whose principal place of business is in a state other than Iowa.

*"Bail enforcement business"* means the business of taking or attempting to take into custody the principal on a bail bond issued or a deposit filed in relation to a criminal proceeding to ensure the presence of the defendant at trial, but does not include such actions that are undertaken by a peace officer or law enforcement officer in the course of the officer's official duties.

*"Chief law enforcement officer"* means the county sheriff, or the sheriff's designee, in the county where the defendant is located, or the chief of police, or the chief's designee, when the defendant is located within the city limits of a city or town which has a police force.

*"Commissioner"* means the commissioner of the department of public safety or the commissioner's authorized designee.

*"Conviction resulting from domestic abuse"* means a conviction at any level in any jurisdiction if the conviction has, as an element, the use or attempted use of physical force, or the threatened use of a deadly weapon, committed by a current or former spouse, parent or guardian of the victim, by a person with whom the victim shares a child in common, by a person who is cohabiting with or has cohabited with the victim as a spouse, parent or guardian, or by a person similarly situated to a spouse, parent, or guardian of the victim. Applicable convictions may include, but are not limited to, crimes of assault, domestic assault, domestic abuse assault, battery, disorderly conduct and other crimes meeting this definition.

*"Defendant"* means the principal on a bail bond issued or deposit filed in relation to a criminal proceeding in order to ensure the presence of the defendant at trial.

*"Department"* means the department of public safety.

*"Duplicate license"* means a license that is issued to substitute for a license that has been lost or destroyed, except that a "duplicate license" shall not mean a "replacement license" as defined herein.

*"Felony"* means an offense defined as a felony by the jurisdiction in which the offense was committed.

*"Licensee"* means a person licensed under this chapter.

*"Moral turpitude"* is an act of baseness, vileness, or depravity or conduct which is contrary to justice, honesty, or good morals. Examples of moral turpitude may include, but are not limited to, the following:

1. Any act or pattern of conduct involving dishonesty, fraud, or deception;
2. Any act of conducting a bail enforcement, private investigative or private security business in violation of Iowa Code chapter 80A, whether in Iowa or another jurisdiction, or a determination from another jurisdiction that the individual or entity has violated the bail enforcement, private investigative, or private security laws, rules, or regulations of that jurisdiction;
3. Any act or pattern of conduct of harassment or stalking;
4. Any criminal act of sexual misconduct;
5. Any illegal act of selling, delivery, possession with intent to deliver, or manufacturing drugs;
6. Conviction resulting from domestic abuse.

*"Peace officer"* means any such individual as designated by Iowa Code section 801.4, subsection 11.

*"Person"* means an individual, partnership, corporation, or other business entity.

*"Private investigation business"* means the business of making, for hire or reward, an investigation for the purpose of obtaining information on any of the following matters:

1. Crimes or wrongs which are committed or threatened.
2. The habits, conduct, movements, whereabouts, associations, transactions, reputation, or character of a person.
3. The credibility of witnesses or other persons.
4. The location or recovery of lost or stolen property.
5. The cause or origin of or responsibility for fires, accidents, or injuries to property.
6. The truth or falsity of a statement or representation.
7. The detection of deception.
8. The securing of evidence to be used before authorized investigating committees, boards of award or arbitration, or in the trial of civil or criminal cases.
9. The locating of owners or heirs of unclaimed funds.

*"Private investigative agency"* means a person engaged in a private investigation business.

*"Private security agency"* means a person engaged in a private security business.

*"Private security business"* means a business of furnishing, for hire or reward, guards, watch personnel, armored car personnel, patrol personnel, or other persons to protect persons or property, to prevent the unlawful taking of goods and merchandise, or to prevent the misappropriation or concealment of goods, merchandise, money, securities, or other valuable documents or papers, and includes an individual who for hire patrols, watches, or guards a residential, industrial, or business property or district.

*"Proof of financial responsibility"* means proof of the ability of a licensee to respond in damages for liability on account of accidents or wrongdoings occurring subsequent to the effective date of the proof, arising out of ownership and operation of a bail enforcement business, private security business or a private investigation business.

*"Replacement license"* means a license that is issued to substitute for a license that has been lost or destroyed as a result of damage from flooding, storms or other conditions which form a basis for issuance of a disaster emergency proclamation by the governor pursuant to Iowa Code section 29C.6.

*"Reserve peace officer"* means a volunteer, nonregular, sworn member of a law enforcement agency who serves under the direction of regular peace officers with or without compensation, has regular police powers while functioning as a law enforcement agency's representative, and participates on a regular basis in the law enforcement agency's activities including crime prevention and control, preservation of the peace, and enforcement of law.

*"Uniform"* means a manner of dress which is of a particular style and distinctive appearance as distinguished from ordinary clothing customarily used and worn by the general public and which clearly identifies the person as an employee of a licensed agency.

**661—121.3(80A) Persons exempt.** This chapter does not apply to the following:

**121.3(1)** An officer or employee of the United States, or a state, or a political subdivision of the United States or of a state while the officer or employee is engaged in the performance of official duties

or an employee of a contractor or subcontractor with a federal agency while performing duties pursuant to a contract with the federal agency.

**121.3(2)** A peace officer engaged in the private security business or the private investigation business with the knowledge and consent of the chief executive officer of the peace officer's law enforcement agency.

**121.3(3)** A person employed full- or part-time exclusively by one employer in connection with the affairs of the employer.

**121.3(4)** An attorney licensed to practice in Iowa, while performing duties as an attorney.

**121.3(5)** A person engaged exclusively in the business of obtaining and furnishing information regarding the financial rating or standing and credit of persons.

**121.3(6)** A person exclusively employed in making investigations and adjustments for insurance companies. This exemption does not apply to persons who contract with a third party, such as an attorney or a broker, to conduct investigations on behalf of insurance companies. However, this exemption does apply to independent contractors who contract directly with insurance companies and exclusively conduct insurance investigative work.

**121.3(7)** A person who is the legal owner of personal property which has been sold under a security agreement, or a conditional sales agreement, or a secured party under the terms of a security interest while the person is performing acts relating to the repossession of the property.

**121.3(8)** A person engaged in the process of verifying the credentials of physicians and allied health professionals applying for hospital staff privileges.

**121.3(9)** A person engaged in the business of retrieval and dissemination of public record information.

**121.3(10)** A person engaged in the business of process service in either a criminal or civil action, where the determination of the whereabouts of the person is only incidental to the service of process.

**121.3(11)** The business of repossession or recovery of property, including debt collection, where the determination of the whereabouts of the person is only incidental to the repossession or collection.

**121.3(12)** A person engaged in the business of genealogical research.

**121.3(13)** A person who sells, installs, maintains, repairs or monitors burglar alarm systems at protected premises or premises to be protected.

**121.3(14)** Iowa Code sections 80A.2, 80A.4(1)*"b,"* and 80A.4(3) address the ability of peace officers to operate as private investigators and private security guards. The department interprets these three references, when read in concert, to mean the following:

*a.* An individual peace officer may conduct private investigation business or private security business with permission of the officer's chief executive, without securing either a state license or identification card.

*b.* Two or more peace officers may form a partnership to conduct private investigation business or private security business without securing either a state license or identification card. The partnership, association, or business may employ other peace officers to conduct investigation or security functions; however, the chief executive of each partner, association member, owner, or employee must give permission to engage in the business.

*c.* A partnership owned and operated by peace officers may not employ nonpeace officers to perform investigation or security functions.

*d.* An agency licensed by the department may not have any peace officers involved in the ownership or management of the agency.

*e.* An agency licensed by the department may not employ a peace officer to do investigative or security functions.

*f.* No corporation in the private security or private investigation business is exempt from the license or identification card requirement or limitations on the employment of peace officers.

**121.3(15)** A person engaged in the business of transporting prisoners under a contract with the Iowa department of corrections or a county sheriff, a similar agency from another state, or the federal government.

**121.3(16)** A person engaged exclusively in the business of providing courier service and who does not wear the uniform or use a marked motor vehicle of a licensed private security agency.

**661—121.4(80A) Licenses.** Each person who engages in the operation of a bail enforcement, private investigation, or private security business in this state shall be licensed prior to such activity. Each business requires a separate license. For a license to be valid, the business shall have at least one current valid licensee who is a director, officer, partner or person who is involved in the business in Iowa.

**121.4(1)** *Application for licenses—generally.* Anyone who wishes to be considered for a bail enforcement, private investigative or private security license should contact the program services bureau as indicated in rule 661—121.1(80A) and request application information.

**121.4(2)** *Jurisdiction.* Any private investigative, private security, or bail enforcement business shall be licensed in Iowa if it is conducting business in Iowa. The department will consider the following factors when determining jurisdiction:

*a.* Whether the private investigative, private security, or bail enforcement business has an office or place of business in Iowa, is organized in Iowa, or conducts business in Iowa.

*b.* Whether services are provided to a client who resides in Iowa, is organized in Iowa, has an office or place of business in Iowa, provided that some of the services are conducted in Iowa.

*c.* Types of activities that are viewed as demonstrating jurisdiction in Iowa include, but are not limited to, the following:

(1) A private investigation business conducts an investigation that occurs entirely or partially in Iowa.

(2) A private investigation business investigates a criminal, civil, or administrative case that originates or is filed in Iowa.

(3) A private security business conducts security at any location in Iowa.

(4) A bail enforcement business takes into custody, or attempts to take into custody, a defendant in an Iowa criminal case.

(5) A business provides bodyguard service to a person who resides in or regularly does business in Iowa.

(6) A business provides armored car service to a client who resides in or does business in Iowa, if part of the services are conducted in Iowa.

*d.* Types of activities that are not, by themselves, viewed as demonstrating jurisdiction in Iowa include, but are not limited to, the following:

(1) A non-Iowa-based private investigation business works on a criminal, civil, or administrative case that originates and is filed in another state, but that contains some investigative elements in Iowa.

(2) A non-Iowa-based business provides bodyguard service to a client who does not reside in Iowa and only occasionally does business in Iowa.

(3) A bail enforcement business takes into custody, or attempts to take into custody, a defendant in a criminal case filed in another state.

*e.* The fact that a business uses the Internet to retrieve public record information from Iowa databases does not, absent other factors, establish jurisdiction in Iowa.

**121.4(3)** *Forms.* An applicant for a license or identification card shall execute forms provided by the department. These forms must be submitted to the commissioner and will not be processed unless complete. The forms used in the administration of this chapter are as follows:

*a.* Application for Bail Enforcement Agency License, Private Investigative Agency License and/or Private Security Agency License, Form #PD1.

*b.* Identification Card Application for: Private Investigator/Private Security Guard/Bail Enforcement Agent, Form #PD2.

*c.* Application for License Renewal, Form #PD3.

*d.* FBI Fingerprint Card, Form #FD–258.

*e.* Limited Liability Company, Form #PD5.

*f.* License Surety Bond, Form #PD6.

*g.* Corporate Information, Form #PD7.

*h.* Identification Card, Form #PD8.

**121.4(4)** *Application requirements.* An applicant for a license as a bail enforcement agency, private investigative agency or private security agency must submit the following to complete the application process:

*a.* A completed Application for Bail Enforcement Agency License, Private Investigative Agency License and/or Private Security Agency License (Form #PD1) for each individual.

With respect to an applicant who is a corporation, Form #PD1 must be completed by each officer or director who is actively involved in the licensed business in Iowa.

With respect to an applicant who is a partnership or association, Form #PD1 must be completed by each partner or association member.

*b.* Two completed Fingerprint Cards (Form #FD–258) and the associated processing fees for each individual identified in paragraph *"a"* of this subrule.

*c.* A completed surety bond form (Form #PD6) issued by a surety company authorized to do business in this state.

*d.* If the applicant is a corporation, a completed Corporate Information form (Form #PD7).

*e.* Two 1″ × 1″ color photographs of the head and shoulders of each individual identified in paragraph *"a"* of this subrule, taken not more than one year prior to application.

*f.* A fee of $100 for each agency license requested, plus $10 for each application form for an employee identification card (Form #PD2) requested pursuant to this subrule.

*g.* Proof of financial responsibility.

*h.* Pictures, photocopies or physical descriptions of all uniforms, hats, badges, and insignia to be used by the private security agency.

**121.4(5)** *Abandonment of applications.* If an applicant for an agency license fails to complete the application within six months after it has been filed, the application shall be deemed abandoned. Any application submitted subsequent to the abandonment of a former application shall be treated as a new application, and must be filed in accordance with subrule 121.4(4).

**121.4(6)** *Proof of financial responsibility.* Proof of financial responsibility shall be given by filing a certificate of insurance from a licensed insurance company demonstrating coverage for general liability, completed operations and personal injury. Personal injury insurance shall include coverage for the following groups of offenses:

*a.* False arrest, detention, or imprisonment, or malicious prosecution.

*b.* Libel, slander, defamation or violation of rights of privacy.

*c.* Wrongful entry or eviction or other invasion of rights of private occupancy.

The certificate shall provide that the insurance shall not be modified or canceled unless 30 days' prior notice is given to the department. Licensees shall have no more than 30 days following any specified expiration dates to comply with insurance requirements. The license shall be automatically revoked if the licensee has not complied with the certificate of insurance requirement within the 30 days.

EXCEPTION: Current licensees who have provided proof of financial responsibility by filing an irrevocable letter of credit as of May 1, 2003, shall be allowed to continue using that means of providing proof of financial responsibility as long as their license remains continuously valid or until such proof is replaced by liability insurance. Licensees who provide proof of financial responsibility pursuant to this exception shall continue to meet the applicable requirements established in subrule 121.4(5) prior to May 1, 2003.

**121.4(7)** *Mandatory examinee.* Rescinded IAB 5/25/05, effective 5/1/05.

**121.4(8)** *Application for examination.* Rescinded IAB 5/25/05, effective 5/1/05.

**121.4(9)** *Time and place of examination.* Rescinded IAB 5/25/05, effective 5/1/05.

**121.4(10)** *Reexaminations.* Rescinded IAB 5/25/05, effective 5/1/05.

**661—121.5(80A) License requirements.** In order to be considered for a license, the applicant must undergo a background investigation by the department and must meet the following standards:

**121.5(1)** Be at least 18 years old;

**121.5(2)** Not be a peace officer (except a reserve peace officer);

**121.5(3)** Never have been convicted of a felony or aggravated misdemeanor;

**121.5(4)** Not be an abuser of alcohol or a controlled substance;

**121.5(5)** Not have a history of repeated acts of violence;

**121.5(6)** Be of good moral character. Consideration of whether an applicant is of good moral character includes but is not limited to:

*a.* Any of the applicant's references indicating the applicant is not of good moral character;

*b.* The sheriff of the county of residence or business or the police chief of the city of residence or business so indicating in writing;

*c.* The applicant's failing to discharge just obligations;

*d.* The applicant's writing a check on an account with knowledge that there are insufficient funds to cover it;

*e.* The applicant's failing to pay employees wages legally due the employees;

*f.* The applicant's knowingly obstructing justice or interfering in the lawful duties of a peace officer or with any official investigation;

*g.* Unless rendered confidential by law, the applicant's failing to report:

(1) A serious crime, or

(2) The location of any stolen property;

*h.* The applicant's committing an act which involves moral turpitude, whether or not a criminal conviction occurred.

*i.* The applicant's being subject to any court order that restrains the person from harassing, stalking, or threatening an intimate partner of the person or child of the intimate partner or person, or engaging in other conduct that would place an intimate partner in reasonable fear of bodily injury to the partner or child, and includes a finding that the person represents a credible threat to the physical safety of the intimate partner or child, or explicitly prohibits the use, attempted use, or threatened use of physical force against the intimate partner or child that would reasonably be expected to cause bodily injury;

*j.* The applicant's being a registered sex offender in any jurisdiction;

*k.* The applicant's being the subject of any arrest warrant, mittimus or other court order for detention in any jurisdiction.

**121.5(7)** Not been convicted of any crime defined in Iowa Code section 708.3, 708.4, 708.5, 708.6, 708.8, or 708.9, or a like offense in another jurisdiction;

**121.5(8)** Not been convicted by any court of illegally using, carrying, or possessing a dangerous weapon;

**121.5(9)** Not have a history of mental illness or instability.

**661—121.6(80A) Identification cards.** Each person employed by and engaged in the business of a licensed bail enforcement, private investigative or private security agency must obtain an employee identification card from the department and must meet the standards established in rule 661—121.5(80A). However, applicants for employee identification cards are not required to comply with surety bond or proof of financial responsibility requirements as those requirements have already been met by the licensed agency. For purposes of this rule, an employee who is required to obtain an identification card from the department is an agent or employee of a licensed agency who is engaged in the activities of the business which render it subject to the regulation of Iowa Code chapter 80A. Employees who are engaged exclusively in the unregulated activities of a licensed agency are considered exempt from this standard. Such exempt activities include clerical work, dispatching, building maintenance, vehicle maintenance, payroll and other financial processing, selling and taking tickets, parking cars and other activities that do not provide direct security services and that are generally conducted away from a contracted job site.

**121.6(1)** To obtain an employee identification card, the licensed agency shall submit:

*a.* A completed Identification Card Application for: Private Investigator/Private Security Guard/Bail Enforcement Agent, Form #PD2;

*b.* Two 1″ × 1″ color photographs of the head and shoulders of the applicant; and

*c.* Two completed fingerprint cards (Form #FD–258), with the associated processing fees.

**121.6(2)** Reserved.

**661—121.7(80A) License and background investigation fees.**

**121.7(1)** A fee of $100 shall accompany each application for a bail enforcement, private investigative or private security license. If the application is approved, the money shall be applied to the license fee, but if the application is disapproved, the deposited application fee shall be refunded to the applicant. Application fees shall not be refunded for abandoned applications described in subrule 121.4(5) or for canceled, suspended or revoked licenses.

**121.7(2)** A nonrefundable fee to cover the cost of processing fingerprint cards through the FBI must be submitted with each new or renewal application and with each application subsequent to a license cancellation or revocation. If fingerprints are rejected as unreadable the first time they are submitted, they may be resubmitted once for no additional fee. If fingerprints are submitted twice and both submissions are rejected as unreadable, subsequent submissions shall require additional processing fees, which shall be included with the submissions. Information regarding fees may be obtained by contacting the department as provided in rule 661—121.1(80A).

**661—121.8(80A) Display of license.** Immediately upon receipt of the license issued by the department, the licensee named therein shall cause such license to be posted and at all times displayed in a conspicuous place in the licensee's principal place of business within the state, so that all persons visiting such place may readily see it. If there is more than one place of business, then there shall be a photocopy of the original license posted in every such place of business. The licensee shall notify the commissioner of each location where a copy of the license is posted. If the licensee has no office in the state of Iowa, the licensee shall post the license at the principal place of business and notify the commissioner of the address where such license is posted. Such license shall at all reasonable times be subject to inspection by the commissioner. It shall be unlawful for any person holding such license to post such license or to permit such license to be posted upon premises other than those authorized therein. Every license, and each copy thereof, shall be surrendered to the department within seven days after written notice to the holder that such license has been revoked. Failure to comply with any of the provisions of this rule is sufficient cause for revocation of the license.

**661—121.9(80A) Duplicate license.** The commissioner shall issue a duplicate license upon the payment of $5 and upon receiving a written statement that the original license has been lost, destroyed, stolen or otherwise rendered useless, and that if the original license is recovered, the original or the duplicate will be returned immediately to the department.

**661—121.10(80A) License renewal.** Each applicant for a license renewal must execute Form #PD3 provided by the department. This renewal form and two completed FBI Fingerprint Cards (Form #FD–258) shall be submitted to the commissioner not less than 30 days prior to expiration of the applicant's current license and shall not be processed unless complete. In order for the application to be complete, the applicant must satisfy the requirements of rules 661—121.4(80A), 661—121.5(80A), and 661—121.7(80A) and, for renewals of private investigation licenses, 661—121.22(80A).

In the event the department has not processed a complete renewal application prior to the lapse of the license, the renewal shall be deemed temporarily granted until the department issues a new license or denies the renewal.

In no event will a renewal license be granted if the application for renewal is received by the department after the expiration date of the existing license.

If the former licensee wishes to continue the bail enforcement, private investigative or private security business, all of the requirements for an initial application must be met.

**661—121.11(80A) Employee identification cards.**

**121.11(1)** The employee identification card issued by the commissioner shall include the employee's name and color photograph, agency name and number, type of business, date of issuance and identification card number.

The identification card shall be evidence that the holder is duly authorized to work for the licensed agency. The holder shall have this card in the holder's possession at all times when acting within the scope of employment. Failure to do so may result in suspension or revocation of the identification card or the agency license. This identification card shall remain the department's property. When any person to whom a card is issued terminates the person's position for any reason, the card must be surrendered to the commissioner within seven days. In the event of loss, destruction, or theft of this card, the licensee shall within five days of such discovery send to the commissioner a written report that describes the circumstances surrounding the loss, destruction, or theft. If the agency license has been terminated or revoked, the agency must return the license and all identification cards to the commissioner within seven days. The penalty for any knowing or willful misconduct in the use of the identification card may be revocation of the identification card or the agency license or both, depending on the nature and degree of the misconduct.

The fee for each application form (Form #PD2) for an original, temporary, or replacement employee identification card is $10. The fee is refundable for blank, unused forms returned to the department.

A nonrefundable fee to cover the cost of processing fingerprint cards through the FBI shall be submitted with each new application for an employee identification card. If fingerprints are rejected as unreadable the first time they are submitted, they may be resubmitted once for no additional fee. If fingerprints are submitted twice and both submissions are rejected as unreadable, subsequent submissions shall require additional processing fees, which shall be included with the submissions.

**121.11(2)** Temporary identification cards. The Identification Card Application for: Private Investigator/Private Security Guard/Bail Enforcement Agent, Form #PD2, shall contain a temporary identification card that shall be valid for 14 calendar days from the date of issuance. This temporary identification card shall be issued to new employees of a licensee so that the requirement that employees have in their possession a valid identification card may be met while the application for a permanent identification card is being processed. The application for an employee identification card must be received by the department in sufficient time to allow four business days for processing. Any application for an employee identification card received by the department without the specified minimum time for processing or after the temporary identification card has expired will be returned to the licensed agency. A new Form #PD2 must then be resubmitted under the requirements of rule 661—121.6(80A).

**121.11(3)** Replacement of identification cards. The commissioner shall issue a duplicate employee identification card upon the submission of a complete new application (Form #PD2), with associated fees as required in rule 661—121.6(80A) and upon receipt of a written statement that the original employee identification card has been lost, destroyed, stolen or otherwise rendered useless. If the original employee identification card is recovered, it shall be returned immediately to the department.

**121.11(4)** Display of identification cards. When an employee of a licensed agency is acting within the scope of employment and is requested to produce identification, the employee shall promptly display the employee identification card and allow the requester to reasonably examine the identification card and write down any information contained thereon. Failure to comply may result in revocation of the identification card or license. The employee may refuse to comply with the request to produce identification if, and only if, displaying the employee identification card would put the employee or another person in danger, or would jeopardize an assignment or investigation.

**661—121.12(80A) Badges, uniforms, insignia, patches and hats.** No badges, uniforms, insignia, patches, or hats will be approved for private investigative or bail enforcement agents. No holder of a license or identification card while performing the duties of a private security guard shall wear any uniform, or wear, display, or likewise use any badge, insignia, patch, shield, or the like, without prior written approval of the commissioner. Any person wearing an approved uniform shall carry a valid identification card issued by the department.

The commissioner will not approve any item subject to this rule if in the commissioner's opinion it would cause a person to confuse the operation of the licensed business with that of a law enforcement agency. The commissioner may consider the appearance of the badge, uniform, insignia, patch or hat of the requesting agency, as well as the appearance of badges, uniforms, insignias, patches or hats of law enforcement agencies in or near the area in which the requesting agency performs services. The commissioner may also consider any other information when making a decision regarding the approval of any item subject to this rule.

Badges, insignia and patches will be approved only for private security as a part of an approved uniform. No badge, insignia, patch or hat will be approved which contains the word or words "police," "officer," "policeman," or "enforcement," or the Great Seal of the State of Iowa. The words "security" and "officer" may be used when they appear as the single term "security officer."

**661—121.13(80A) Advertisement, cards, letterhead and the like.** No holder of a license or identification card shall use, display, cause to be printed or distributed in any fraudulent, false, or misleading manner, cards, letterheads, circulars, brochures, or any other advertising material or advertisement in which any name or indicia of the license status of the licensee is set forth in any manner other than the name under which the licensee is duly licensed.

Such holder of a license or identification card shall not publish or cause to be published any advertisement, letterhead, circular or statement or phrase of any sort which suggests that the holder is a peace officer.

Any violation of this rule may result in suspension or revocation of the identification card or the license, and possible referral for criminal prosecution.

**661—121.14(80A) Misleading statements.** No holder of a license or identification card may make any statement which indicates or tends to indicate the individual is a peace officer.

**661—121.15(80A) Reports.** Any private investigative agency licensee who provides services to any client in this state shall make and offer to the client a typed or legibly written ink report containing the findings and complete details of the investigation, a copy of which shall be retained by the licensee for three years and made available to the commissioner for examination at any reasonable time upon a complaint from the client for whom the report was prepared. In the event a client does not desire a written report, the licensee will note the time and date on the file copy of the report that the client stated no desire for a written report or refused the offer. A private security agency need not submit a written report unless the client so requests one.

Descriptive reports, chronological reports, and cover letters to the client shall be personally signed by the licensee or the licensee's designee. The licensee's file copy will reflect the names of all participating employees and a description of the work performed by each one.

**661—121.16(80A) Denial, cancellation, suspension, or revocation of a license or identification card.**

**121.16(1)** *Actions by the commissioner.* The commissioner may deny, suspend, cancel or revoke a license or identification card(s) for any of the following reasons:

*a.* Failure to comply with all of the provisions of Iowa Code chapter 80A and Iowa Administrative Code, 661—Chapter 121.

*b.* Receipt by the department of a certificate of noncompliance from the child support recovery unit of the Iowa department of human services, as provided for in Iowa Code chapter 252J.

*c.* Receipt by the department of written notice that the licensed agency is no longer conducting business and is abandoning the remaining term of the license.

**121.16(2)** *Voluntary suspension.* The commissioner may allow an agency to place its license in voluntary suspension and may reinstate the license when all requirements are met. The license shall expire at the time of renewal unless all requirements are met.

**121.16(3)** *Surrender of license and identification card(s).* Every license, and each copy thereof, and all employee identification cards shall be surrendered to the department within seven days after written notice to the holder that such license has been canceled, abandoned, suspended or revoked.

**121.16(4)** *Surrender of identification card(s).* An employee identification card shall be surrendered to the department within seven days after written notice to the licensee that such employee identification card has been canceled or revoked.

**121.16(5)** *Temporary denial or suspension.* An agency license or employee identification card shall be temporarily denied or suspended until the outcome of any pending action is known if the result of that action would disqualify the applicant, licensee or employee.

**661—121.17(80A) Licensee's duty regarding employees.** The licensee shall be held responsible for ascertaining that all the licensee's employees meet the requirements of the bail enforcement, private investigation and private security statute and rules.

The licensee shall report to the commissioner any violations of the statute and rules, and inconsistencies thereof, and take immediate steps to be in compliance with such statute and rules.

The licensee is responsible for ensuring that each employee who is required to obtain an identification card from the department has a valid temporary or permanent identification card in the employee's possession prior to the employee's commencing work.

Failure to meet these requirements may result in suspension or revocation of the license or identification card(s).

**661—121.18(80A) Campus weapon requirements.** In addition to the requirements of the statutes, nothing in rule 661—4.3(17A,724) shall preclude the sheriff from requiring additional firearm training. However, if the sheriff so requires additional training, the sheriff shall make such training reasonably available to the applicant.

**661—121.19(80A) Professional permit to carry weapons.** Each person seeking a professional permit to carry weapons must meet the requirements of the Iowa Code and Iowa Administrative Code, 661—Chapter 4.

**661—121.20(80A) Appeals.** Any action of the department that the applicant or employee considers adverse may be appealed through the process delineated in Iowa Administrative Code, 661—Chapter 10.

**661—121.21(252J) Child support collection procedures.** The following procedures shall apply to actions taken by the department on a certificate of noncompliance received from the Iowa department of human services pursuant to Iowa Code chapter 252J:

**121.21(1)** The notice required by Iowa Code section 252J.8 shall be served upon the applicant, identification card holder, or licensee by restricted certified mail, return receipt requested, or personal service in accordance with Iowa Rule of Civil Procedure 1.305. Alternatively, the licensee, identification card holder, or applicant may accept service personally or through authorized counsel.

**121.21(2)** The effective date of revocation or suspension of a license or identification card, or denial of the issuance or renewal of a license or identification card, as specified in the notice required by Iowa Code section 252J.8, shall be 60 days following service upon the licensee, identification card holder, or applicant.

**121.21(3)** Licensees, identification card holders, and applicants for licenses or identification cards shall keep the department informed of all court actions and all child support recovery unit actions taken under or in connection with Iowa Code chapter 252J and shall provide the department with copies, within seven days of filing or issuance, of all applications filed with the district court pursuant to Iowa Code section 252J.9, all court orders entered in such actions, and withdrawals of certificates of noncompliance by the child support recovery unit.

**121.21(4)** All departmental fees for applications, license or identification card renewal or reinstatement must be paid by the licensee, identification card holder, or applicant before a license will

be issued, renewed, or reinstated after the department has denied the issuance or renewal of a license or identification card, or has suspended or revoked a license or identification card pursuant to Iowa Code chapter 252J.

**121.21(5)** In the event a licensee, identification card holder, or applicant files a timely district court action following service of a department notice pursuant to Iowa Code sections 252J.8 and 252J.9, the department shall continue with the intended action described in the notice upon the receipt of a court order lifting the stay, dismissing the action, or otherwise directing the department to proceed. For the purpose of determining the effective date of revocation or suspension or denial of the issuance or renewal of a license or identification card, the department shall count the number of days before the action was filed and the number of days after the action was disposed of by the court.

**661—121.22(80A) Continuing education requirements.** The continuing education rules that follow rest upon the premise that the increasing complexity of the private investigation business makes it essential that private investigators who have been granted licenses to practice continue their education; the public interest requires that private investigators keep themselves continually up to date on developments affecting their practice; and formal programs of continuing education provide private investigators the opportunity to continually update themselves on the expanding body of knowledge required to practice the private investigation profession. Compliance with the continuing education requirements of the department shall be as follows:

Each person who is the holder of a license to operate a private investigative agency is required to comply with the continuing education requirements as a condition precedent to renewal of the person's license.

Each person who is the holder of an identification card to operate as a private investigator is required to comply with the continuing education requirements as a condition precedent to renewal of the employer's agency license.

**121.22(1)** *Cost of continuing education.* All costs of complying with the continuing education requirements of the department are the responsibility of the licensee who seeks to operate a private investigative agency in this state.

**121.22(2)** *Basic requirement.* A licensee seeking to renew the licensee's private investigative agency license shall, during the two-year period preceding the agency license expiration date, complete a minimum of 12 hours of acceptable continuing education. Employees of licensees shall, during the two-year period preceding the agency license expiration date, complete a minimum of 12 hours of acceptable continuing education. An employee who has worked for a licensed agency for less than 90 days at the time of the agency license expiration date shall be exempt from the continuing education requirement of this chapter, provided that during the preceding two years the employee has not been employed as a private investigator for a licensed agency or agencies in this state for a combined total of more than 180 days.

*a.* Applicants who are residents of another state, who are licensed to operate a private investigation agency in their state of residency, and who are actively engaged in the practice in their state of residence, shall not be required to meet the basic continuing education requirement if their state of residence requires similar continuing education to maintain their private investigative agency license.

*b.* The commissioner shall have the authority to make exceptions for reasons of individual hardship including health (certified by a medical doctor), military service, foreign residency, or other good cause.

*c.* Applicants for new licenses who have held a private investigative agency license in Iowa within the past two years shall complete a minimum of 12 hours of acceptable continuing education during the two-year period preceding the date of application.

**121.22(3)** *Measurement standards.* The following standards will be used to measure the hours of credit to be given for acceptable continuing education programs completed by individual licensees:

*a.* Credit will be given for whole hours only, with a minimum of 50 minutes constituting one hour. For example, 100 minutes of continuous instruction would count for two hours; however, more than 50 minutes but less than 100 minutes of continuous instruction would count for only one hour.

*b.* Only class hours or the equivalent, and not student hours devoted to preparation, may be counted.

*c.* Service as lecturer or discussion leader of continuing education programs may be counted to the extent that it contributes to the applicant's professional competence.

**121.22(4)** *Programs which qualify.* The overriding consideration in determining whether a specific program qualifies as acceptable continuing education is that it be a formal program of learning which contributes directly to the professional competence of an individual licensed to practice in this state. It will be left to the individual license holder to determine the course of study to be pursued. Thus, each licensee may study subjects related to the licensee's particular practice.

*a.* Continuing education programs will qualify only if:

(1) An outline of the program is prepared in advance and preserved.

(2) The program is at least one hour (50-minute period) in length.

(3) The program is conducted by a qualified instructor, discussion leader, or lecturer. A qualified instructor, discussion leader, or lecturer is anyone whose background, training, education or experience makes it appropriate for that person to lead a discussion on the subject matter of the particular program.

(4) A record of attendance is maintained.

*b.* The following programs are deemed to qualify provided all other requirements of this rule are met:

(1) Professional development programs of recognized national and state private investigation organizations.

(2) Technical sessions at meetings of recognized national private investigation organizations and their chapters.

(3) University or college courses.

1. Each semester hour credit shall equal 10 hours toward the requirement.
2. Each quarter hour credit shall equal 6 hours toward the requirement.
3. Each classroom hour of noncredit courses will equal 1 qualifying hour.

(4) Formal organized in-firm and interfirm educational programs.

(5) Programs in other recognized organizations (accounting, industrial, legal and others).

(6) Other organized educational programs on technical and other related subjects.

*c.* The following general subject matters are acceptable as long as they contribute to the professional competence of the individual investigator.

(1) Accounting and auditing.

(2) Management.

(3) Computer science.

(4) Communications arts.

(5) Law.

(6) Functional fields of the business, including but not limited to the following:

1. Accident investigation.
2. Background investigation.
3. Business taxes.
4. Criminal investigation.
5. Court testimony.
6. Employee theft.
7. Process service.
8. Personnel law.
9. Product liability.
10. Public records availability/access.
11. Report writing.
12. Substance abuse in the workplace.
13. Surveillance techniques.
14. Wage and hour law.
15. Workers' compensation law.

Areas other than those listed above may be acceptable if the licensee can demonstrate that they contribute to the licensee's professional competence. The responsibility for substantiating that a particular program is acceptable and meets the requirements rests solely upon the licensee.

*d.* Formal correspondence and formal individual study programs contributing directly to the professional competence of an individual which require registration and provide evidence of satisfactory completion will be considered for credit. The amount of credit to be allowed for correspondence and formal individual study programs is to be recommended by the program sponsor and shall not exceed 50 percent of the continuing education requirement.

*e.* Practical training, also known as field training or on-the-job training, qualifies if it meets the criteria of paragraphs *"a"* through *"c"* of this subrule, is accompanied by classroom training in the same topic area, and counts for no more time than the classroom training.

*f.* The right is specifically reserved to the commissioner to approve or disapprove credit for continuing education claimed under these rules.

**121.22(5)** *Controls and reporting.*

*a.* Applicants for license renewal must provide a signed statement, on forms provided by the department, setting forth the continuing education in which the licensee and the licensee's employees have participated in such manner and at such times as prescribed by the commissioner. This information may include:

(1) School, firm or organization conducting the course.

(2) Location of course.

(3) Title of course and description of content.

(4) Principal instructor.

(5) Dates attended.

(6) Hours claimed.

*b.* The commissioner may require sponsors of courses to furnish attendance lists or any other information the commissioner deems essential for administration of these continuing education rules.

*c.* The commissioner will verify on a test basis information submitted by licensees. If an application for license renewal is not approved, the applicant will be so notified and may be granted a period of time by the commissioner in which to correct the deficiencies noted.

*d.* Primary responsibility for documenting the requirements rests with the licensee and evidence to support fulfillment of those requirements must be retained for a period of three years subsequent to submission of the report claiming the credit. Satisfaction of the requirements, including retention of attendance records and written course outlines, may be accomplished as follows:

(1) For courses taken for scholastic credit in accredited universities and colleges or high school districts, evidence of satisfactory completion of the course will be sufficient. For noncredit courses taken, a statement of the hours of attendance, signed by the instructor, must be obtained by the permit holder.

(2) For correspondence and formal independent study courses, written evidence of completion must be obtained by the licensee.

(3) In all other instances, the licensee must maintain a record of the information listed in subrule 121.22(4) and a copy of the course outline prepared by the course sponsor.

**121.22(6)** *Compliance.*

*a.* *Renewals.* If a licensee fails to comply with continuing education requirements prior to the expiration of the license, the department may grant a temporary 30-day license. If the licensee does not complete the continuing education requirements within the 30-day period, the license renewal shall be denied. If the former licensee then wishes to continue the private investigation business, all of the requirements for an initial application must be met. This includes continuing education requirements if the new application is submitted within two years of the date on which the last license became invalid.

*b.* *New applications for previously licensed persons.* If an applicant for a private investigative agency license has been licensed in Iowa within the past two years, continuing education requirements must be met. Failure to comply shall result in the denial of the license until such time as the requirements are met.

*c.* *Employees.* If any employee of a licensee fails to comply with continuing education requirements, the employee's identification card shall be revoked and the licensee shall surrender the identification card to the department. An employee may reapply for an identification card as if it were an initial application when continuing education requirements have been met.

**661—121.23(80A) Reciprocity.**

**121.23(1)** *Eligibility.* A temporary permit to conduct business in Iowa may be issued to a private investigative or private security agency licensed in another state provided that the requirements and qualifications in the licensing state are similar to those in Iowa and that the licensing state allows similar privileges by reciprocity. A temporary permit may be issued for a period not to exceed 90 days and is not renewable. Employees of an agency granted a temporary permit must comply with Iowa employee requirements in rules 661—121.6(80A) and 661—121.11(80A).

**121.23(2)** *Requirements.* In order to be considered for a temporary permit, the applicant must undergo a background investigation by the department and shall submit the following:

*a.* Proof of a current valid bail enforcement, private investigative or private security license in another state. Such license shall be of the same license type as the temporary permit requested from Iowa.

*b.* A completed Application for Bail Enforcement Agency License, Private Investigative Agency License and/or Private Security Agency License (Form #PD1).

*c.* Two completed FBI Fingerprint Cards (Form #FD–258), with the associated processing fees.

*d.* Proof of surety bond issued by a surety company authorized to do business in this state.

*e.* Proof of insurance.

*f.* If the applicant is a corporation, articles of incorporation and an Iowa certificate of authority issued by the Iowa secretary of state.

*g.* Two 1″ × 1″ color photographs of the head and shoulders of the applicant, taken not more than one year prior to application.

*h.* A fee of $100 for each temporary permit requested.

*i.* An application, with associated fees, for an employee identification card (Form #PD2) for the temporary permit holder.

**121.23(3)** *Employee identification cards.* The temporary permit holder shall submit an application for an employee identification card for each employee as required in rule 661—121.6(80A).

**661—121.24(80A) Replacement license.** The commissioner shall issue a replacement license upon receiving a written statement that the original license has been lost, destroyed, stolen or otherwise rendered useless by damage from flooding, storms or other conditions which form a basis for issuance of a disaster emergency proclamation by the governor pursuant to Iowa Code section 29C.6. If the original license is recovered, the original or the replacement will be returned immediately to the department. No fee shall be charged for the issuance of a replacement license.

These rules are intended to implement Iowa Code chapter 80A.

[Filed 6/30/75]
[Filed 6/7/79, Notice 5/2/79—published 6/27/79, effective 8/2/79]
[Filed 11/1/84, Public Hearing Notice 9/12/84—published 11/21/84, effective 1/1/85]
[Filed emergency 12/4/84—published 12/19/84, effective 1/1/85]
[Filed emergency 5/31/85—published 6/19/85, effective 5/31/85]
[Filed 1/10/86, Notice 11/20/85—published 1/29/86, effective 3/6/86]
[Filed 4/1/88, Notice 9/23/87—published 4/20/88, effective 5/25/88]
[Filed emergency 6/29/89—published 7/26/89, effective 7/1/89]
[Filed 10/13/89, Notice 7/26/89—published 11/1/89, effective 1/1/90]
[Filed 12/4/92, Notice 9/16/92—published 12/23/92, effective 2/1/93]
[Filed 11/3/95, Notice 6/7/95—published 11/22/95, effective 1/1/96]
[Filed 7/25/96, Notice 6/19/96—published 8/14/96, effective 10/1/96]
[Filed 3/7/97, Notice 10/9/96—published 3/26/97, effective 6/1/97]

[Filed emergency 6/23/98—published 7/15/98, effective 7/1/98]
[Filed 2/5/99, Notice 7/15/98—published 2/24/99, effective 4/1/99]
[Filed emergency 11/30/00—published 12/27/00, effective 12/1/00]
[Filed emergency 6/5/02—published 6/26/02, effective 7/1/02]
[Filed 2/28/03, Notice 8/21/02—published 3/19/03, effective 5/1/03]
[Filed emergency 4/29/05—published 5/25/05, effective 5/1/05]
[Filed 11/3/05, Notice 6/8/05—published 11/23/05, effective 1/1/06]
[Filed emergency 6/30/08—published 7/30/08, effective 7/1/08]

CHAPTERS 122 to 140
Reserved

# CHAPTER 141
# CLOSED CIRCUIT SURVEILLANCE SYSTEMS

[Prior to 6/8/05, see 661—Ch 23]

**661—141.1(99F) Definitions.** The following definitions apply to rules in 661—Chapter 141:

*"Administrator"* means the administrator of the Iowa racing and gaming commission.

*"Applicant"* means any person applying for an occupational license or applying for a license to operate an excursion gambling boat, or the officers and members of the board of directors of a qualified sponsoring organization located in Iowa.

[1] *"Casino"* means all areas of an excursion gambling boat, racetrack enclosure, or gambling structure licensed to conduct gambling games.

*"Casino surveillance"* means the observation of gaming and gaming-related activities in a licensed gaming establishment. The purpose of a surveillance system is to safeguard the licensee's assets, to protect both the public and the licensee's employees, and to promote public confidence that licensed gaming is conducted honestly and free of criminal elements and activities. It is the responsibility of the licensee to ensure that the surveillance system is used to accomplish the stated purposes and is not used in an improper manner that would bring discredit to the industry.

[1] *"Closed network"* or *"closed circuit"* means all digital recording equipment and all other associated surveillance equipment must be designed, configured, and maintained on a separate and exclusive network system located on the same premises as the casino. This closed network system must not be touched by, connected to, or partitioned off of any other network, except with approval of the DCI.

*"Commission"* means the Iowa racing and gaming commission.

*"DCI"* means the division of criminal investigation, Iowa department of public safety.

*"Dedicated coverage"* means camera coverage where the sole function is to view and record a specific area whenever activity is occurring in that area.

*"Gambling game"* means any game of chance authorized by the commission.

*"Gangplank"* means the walkways that passengers use to embark and disembark from the excursion gambling boat.

*"Land-based facility"* means the licensee's operation where the soft count room is located, if other than on an excursion gambling boat.

*"Licensee"* means a qualified sponsoring organization conducting gambling games on an excursion gambling boat or in a racetrack enclosure licensed by the Iowa racing and gaming commission under Iowa Code section 99F.7.

*"Operator"* means an entity licensed by the Iowa racing and gaming commission to operate an excursion gambling boat or racetrack enclosure.

*"Slot change booth"* means a structure on the floor of a licensed gaming establishment which houses a coin-counting device that is utilized to redeem coins or tickets from patrons.

[1] April 1, 2008, effective date delayed 70 days by the Administrative Rules Review Committee at its meeting held March 7, 2008. At its meeting held June 9, 2008, the Committee delayed the effective date until the adjournment of the 2009 Session of the General Assembly.

**661—141.2(99F) Minimum standards.** This chapter sets forth the minimum standards that must be followed by a licensee with respect to casino surveillance systems. The director of the DCI or the administrator may, at the director's or administrator's absolute discretion, require a licensee to comply with casino surveillance system requirements that are more stringent than those set forth by these rules.

NOTE: The requirements established in this chapter apply to casinos on excursion gambling boats pursuant to Iowa Code section 99F.4 and to casinos in other gaming establishments pursuant to 491—subrule 5.4(7).

**661—141.3(99F) Surveillance departments—organizational structure.** Surveillance departments are to be operated in an autonomous fashion, as separate and distinct entities from all other departments.

A gaming facility's organizational structure shall place the director of the surveillance department directly under the span of control and authority of the operator's board of directors or appropriate parent company executive where practical. Under no circumstances will the director of surveillance report to or take direction from any authority at a level below the general manager.

**661—141.4(99F) Closed circuit surveillance system.**

[1]**141.4(1)** Every licensee shall install, maintain and operate, on the same premises where the casino is located or, with the approval of the DCI, on a property adjacent to the casino, a closed circuit surveillance system according to specifications set forth in these rules and shall provide to the commission and the DCI access at all times to the system or its signal.

**141.4(2)** Any casino issued a license on or after July 1, 2004, will be required to install a recording system that is totally digital and that meets the requirements as outlined in this chapter.

[1]**141.4(3)** All licensees shall have in place digital recording systems that meet the requirements of this chapter no later than January 1, 2011. Any system converted to digital prior to January 1, 2011, must meet the requirements of this chapter upon installation.

[1] April 1, 2008, effective date delayed 70 days by the Administrative Rules Review Committee at its meeting held March 7, 2008. At its meeting held June 9, 2008, the Committee delayed the effective date until the adjournment of the 2009 Session of the General Assembly.

**661—141.5(99F) Required equipment.** The closed circuit surveillance system shall include, but shall not be limited to, the following equipment:

**141.5(1)** *Cameras.* The system shall include Pan Tilt Zoom cameras, commonly referred to as PTZ cameras, that are light-sensitive and capable of being placed behind a dome or one-way mirror which conceals the PTZ cameras from view. Each camera shall have the capability to distinguish a clear, unobstructed view of the table number of the gaming table or slot machine.

**141.5(2)** *Printers.*

*a.* *Video systems.* The printers for video systems shall be capable of adjustment and must possess the capability to generate instantaneously upon command a clear, still copy of the image depicted on a videotape recording with a minimum of 128 shades of gray.

*b.* *Digital systems.* The printers for digital systems shall be capable of printing a clear, still copy using a minimum of four colors at 600 × 600 dots per inch on photo-quality paper.

**141.5(3)** *Monitors.* Each screen must be at least 12 inches measured diagonally and all controls must be front-mounted. Solid state circuitry is required.

**141.5(4)** *Date and time generators.* Each system shall be capable of synchronized recording in military time, with both the time and date of the recorded events displayed without obstructing the recorded view.

**141.5(5)** *Universal power supply.* The system and its equipment must be directly and securely wired in a way to prevent tampering with the system. In the event of a loss in power to the surveillance system, an auxiliary or backup power source must be available and capable of providing immediate restoration of power to the elements of the surveillance system that enable surveillance personnel to observe the gaming activity remaining open for play and all areas monitored by dedicated coverage.

**141.5(6)** *Domes for cameras.* The domes shall be made of sufficient quality and size to accommodate PTZ cameras and shall be capable of accommodating clear, unobstructed views.

**141.5(7)** *Switchers.* The switchers shall be capable of both manual and automatic sequential switching for the entire surveillance system.

**141.5(8)** *Recorders.* Each camera required by these standards must possess the capability of having its view displayed on a video or computer monitor and recorded. The surveillance system must include enough monitors and recording capacity to simultaneously display and record multiple gaming, cage, drop, count room activities, and record the views of all dedicated coverage. Recording systems shall be capable of copying original images while maintaining the original native format, and storing images in a format that contains a method to verify the authenticity of the original recordings and copies. The

licensee shall supply the medium for download and transfer of the information and a jewel case or sleeve for the medium.

**141.5(9)** *Digital systems.*

*a.* All images and audio shall be digitally recorded and stored on a system with backup and retrieval capabilities.

*b.* Recording systems shall be locked by the manufacturer to disable the erase and reformat functions and to prevent access to the system data files.

*c.* The system shall provide uninterrupted recording while the playback or copy function is used.

[1]*d.* If the licensee chooses to use a network for the digital recording equipment, it must be a closed network with limited access located on the same premises as the casino, or, with the approval of the DCI, on a property adjacent to the casino. The licensee must submit, for approval by the DCI, written policies governing the administration of the network, which shall include, but not be limited to, employee access levels and the transmission or release of live or recorded images, video, or audio. Nothing in this paragraph shall be interpreted to prevent the commission from utilizing or transmitting for regulatory purposes images recorded by a video surveillance system.

*e.* The licensee shall provide the DCI and the commission representative with the necessary software and hardware to review a downloaded recording. Additionally, the licensee shall provide the DCI and the commission representative with printers meeting the requirements as outlined in 661—subrule 141.5(2).

*f.* The licensee shall be responsible for staffing the surveillance room with licensed staff trained in the use of digital equipment. Surveillance employees shall be capable of downloading or copying digital audio or images, or both, for evidentiary purposes.

[1] April 1, 2008, effective date delayed 70 days by the Administrative Rules Review Committee at its meeting held March 7, 2008. At its meeting held June 9, 2008, the Committee delayed the effective date until the adjournment of the 2009 Session of the General Assembly.

**661—141.6(99F) Required surveillance.** Every licensee or operator shall conduct and record, as required by either the commission or the DCI, surveillance that allows clear, unobstructed views in the following areas of the gaming floor and related areas, land-based facilities, and racetrack enclosures:

**141.6(1)** *Slot machines.* Every licensee who exposes slot machines for play shall install, maintain, and operate a casino surveillance system that possesses the capability to monitor and record the slot machine number.

**141.6(2)** *Table games.* The surveillance system must possess the capability to monitor and record all gaming or card table surfaces; table number, including table bank trays, with sufficient clarity to permit identification of all chips, cash, card values, and the outcome of the game; dice in craps games, with sufficient clarity to read the dice in their stopped position after each roll; and all roulette tables and wheels must be capable of being monitored and recorded on a split screen to permit views of both the table and the wheel on one monitor screen. Each table or card game shall have the capability of being monitored and recorded by no less than two cameras.

**141.6(3)** *Progressive table games.* Each progressive table game must be monitored by dedicated coverage that provides views of the table surface so that the card values and card suits can be identified and a view of the progressive meter jackpot amount.

**141.6(4)** *Casino cage, slot change booth, and self-service coin, token, or ticket redemption center.* The surveillance system must possess the capability to monitor and record a general overview of activities occurring in each casino cage, slot change booth, and self-service coin, token, or ticket redemption center with sufficient clarity to identify patrons and employees at the counter area, cash drawers, vaults, safes, countertops, coin and currency counting machines, and chip and token storage, and to identify chip, token, and currency denominations. The casino cage and slot change booth area in which fills, credits, and jackpots are transacted must be monitored by dedicated coverage that provides views with sufficient clarity to identify the chip, token, and currency values and the amounts on the fill/credit slips.

**141.6(5)** *Count rooms.* The surveillance system must possess the capability to monitor and record all areas within the hard or soft count room, including walls, doors, scales, wrapping machines, coin sorters, currency counters, vaults, safes, and general work surfaces, whenever funds or persons are present. The counting surface in the soft count room must be made of a transparent material. Any area where uncounted coin or currency is stored must be monitored by dedicated coverage. In addition, the hard count and soft count process must be monitored by dedicated coverage.

**141.6(6)** *Movement of funds.* The surveillance system must possess the capability to monitor and record the movement of cash, gaming chips, tokens, drop boxes and drop buckets. All casino entrance and exit doors, elevators, stairs, gangplanks, and loading and unloading areas shall also possess the capability to be monitored and recorded if they are utilized for the movement of uncounted moneys, tokens, or chips.

**141.6(7)** *Admissions entrance and exits.* The admissions and exit areas of the excursion gambling boat and racetrack enclosures must be monitored by dedicated coverage with sufficient clarity to identify patrons and employees at the admissions entrance and exit areas.

**141.6(8)** *Overall views.* The surveillance system must possess the capability to monitor and record the casino pit area and general casino floor with sufficient clarity to permit identification of players, employees, patrons, and spectators.

**141.6(9)** *Additional coverage.* The DCI may require surveillance coverage of any other operation or game either on an excursion gambling boat, at a land-based facility, or at a racetrack enclosure.

**141.6(10)** *Digital systems.* All areas that require dedicated coverage and all images viewed on a surveillance operator's working monitor shall be recorded at a sufficient rate of images per second so that, when played back in real time, there is no motion loss detectable to the human eye.

**661—141.7(99F) Equipment in DCI offices.** Excursion gambling boat, racetrack enclosure or land-based offices assigned to the DCI shall be equipped with at least two video or computer monitors, each a minimum of 12 inches, with control capability of any source in the surveillance system. The following shall be additional mandatory equipment for said room or rooms:

1. A printer meeting the specifications of 661—subrule 141.5(2).
2. Two recorders.
3. Audio pickup of soft count room.
4. Time and date generators, if not in the master surveillance system.
5. Total override surveillance system capabilities.

**661—141.8(99F) Camera lenses.** All closed circuit cameras shall be equipped with lenses of sufficient quality to show clearly the value of gaming chips, tokens, and playing cards. These cameras shall be capable, at a minimum, of black and white recording and viewing, except those cameras covering exits and entrances of the casino area and gangplank areas, which shall be capable of recording in color.

**661—141.9(99F) Lighting.** Adequate lighting shall be present in all areas of the casino and count rooms to enable the video surveillance system to provide clear viewing and reproductions.

[1]**661—141.10(99F) Surveillance room.** There shall be provided in each gambling facility or gambling structure a room specifically utilized to monitor and record activities on the casino floor, count room, cashier cages, gangplank areas, admission entrances and exits, and slot change booths. This room shall have a trained surveillance person present at all times during casino operation hours. In addition, a gambling structure, excursion gambling boat or racetrack enclosure may have satellite monitoring equipment. The following are requirements for the operation of equipment in the surveillance room and of satellite monitoring equipment:

[1]**141.10(1)** *Surveillance equipment location.* All equipment that may be utilized to monitor or record views obtained by a casino surveillance system must remain in a room located on the same premises as the casino, or, with the approval of the DCI, on property adjacent to the casino and must be used exclusively for casino surveillance security purposes. The satellite monitoring equipment must be capable of being

disabled from the casino surveillance room when not in use. The entrance to the casino surveillance room must be locked or secured at all times.

**141.10(2)** *Override capability.* Casino surveillance equipment must have total override capability over any other satellite monitoring equipment in other casino offices, with the exception of the DCI rooms.

**141.10(3)** *Access.* DCI and commission employees shall at all times be provided immediate access to the casino surveillance room and satellite monitoring equipment. Also, all DCI and commission employees shall have access to all records and areas of such rooms.

**141.10(4)** *Surveillance logs.* Entries in the log shall be required when specific surveillance is requested by the DCI or the commission, or whenever any activity that appears unusual, irregular, illegal or in violation of commission rules is observed. Also, all communications received or sent from the surveillance room in regard to surveillance activities or casino operations shall be logged.

**141.10(5)** *Blueprints.* A copy of the configuration of the casino floor shall be posted and updated immediately upon any approved change. The location of any change and the location of surveillance cameras, gaming tables and slot machines by assigned numbers shall also be included. Copies of the blueprints shall be made available immediately to the DCI and commission.

**141.10(6)** *Storage and retrieval.* Surveillance personnel shall label and file all recordings. The date and time of the recording shall be recorded. Recordings of admission entrances, exits, and casino cashier cages where check-cashing activities occur shall be retained for 21 days unless a longer period is required by the DCI, the commission, or court order. All other recordings shall be retained for at least 7 days after recording unless a longer period is required by the DCI, the commission, or court order. Original audio, video, and digital recordings shall be released to the DCI or commission upon demand.

**141.10(7)** *Malfunctions.* Each malfunction of surveillance equipment must be repaired within 24 hours of the malfunction. If, after 24 hours, activity in the affected area cannot be monitored, the game or machine shall be closed until such coverage can be provided. A record of all malfunctions shall be kept and reported to the DCI each day. In the event of a dedicated coverage malfunction, the licensee must immediately provide alternative camera coverage or other security measures that will protect the subject activity. If other security measures are taken, the licensee must immediately notify the DCI. The DCI, in its discretion, will determine whether the other security measures are adequate.

**141.10(8)** *Security.* Entry to the surveillance room and access to satellite monitoring equipment shall be limited to persons approved by the DCI or the commission. A log of personnel entering and exiting the surveillance room and accessing satellite monitoring equipment shall be maintained and submitted to the DCI or the commission upon request.

**141.10(9)** *Playback station.* Within the DCI room, there shall be an area that includes, but is not limited to, a monitor and a recorder with the capability of producing first-generation copies.

**141.10(10)** *Additional requirements.*

*a.* Audio and video or digital monitoring and recording shall be continuous in the detention areas when someone is being detained. These recordings must be retained for 30 days after the recorded event, unless directed otherwise by the administrator, DCI or court order.

*b.* The commission, its employees, and DCI agents shall, at all times, be provided immediate access to the surveillance room and all areas of the casino.

**141.10(11)** *Written plans and alterations.*

*a.* Every operator or applicant for licensing shall submit to the commission for approval by the administrator and to the DCI for approval a written casino surveillance system plan no later than 60 days prior to the start of gaming operations.

*b.* A written casino surveillance system plan must include a casino floor plan that shows the placement of the surveillance room and all casino surveillance equipment in relation to the locations required to be covered and a detailed description of the casino surveillance system and its equipment. In addition, the plan may include other information that evidences compliance with these rules by the licensee, operator or applicant.

*c.* The operator may change the location of the surveillance room, table games, slot machines, and other gaming devices. The surveillance system must also be adjusted, if necessary, to provide the

coverage required by these rules. A DCI agent must approve the change in the surveillance system before the relocated surveillance room, table games, slot machines, or other gaming devices may be placed into operation.

EXCEPTION: A commission representative may allow a gambling game to be placed in operation pending approval by a DCI agent.

[1] April 1, 2008, effective date delayed 70 days by the Administrative Rules Review Committee at its meeting held March 7, 2008. At its meeting held June 9, 2008, the Committee delayed the effective date until the adjournment of the 2009 Session of the General Assembly.

**661—141.11(99F) Nongambling hours.** Security surveillance will be required during nongambling hours as follows:

**141.11(1)** *Cleanup and removal time.* At any time that cleanup operations or money removal is being conducted in the casino area, the security surveillance room must be staffed with a minimum of one trained surveillance person.

**141.11(2)** *Locked-down mode.* Anytime the casino is closed and in a locked-down mode, sufficient surveillance coverage must be conducted to monitor and record the casino in general so that security integrity is maintained. During this period, the presence of a trained security surveillance person shall not be required.

**661—141.12(99F) Waivers from requirements.** Upon written request of an applicant, licensee, or operator, the director of the DCI may, for just cause, waive any requirement of this chapter, provided that the director finds that all of the following conditions exist:

1. The requirement requested to be waived is not imposed by statute or another provision of law, and the establishment of the requirement is entirely within the authority of the department of public safety.
2. Enforcing the requirement would impose an undue hardship on the applicant, licensee, or operator requesting the waiver.
3. Granting the waiver would not prejudice the substantial legal rights of any person.
4. Substantially equal protection of public health, safety, and welfare to that which would result from the enforcement of the requirement will be afforded through another means.

Each request for a waiver shall be reported to the agency rules administrator of the department of public safety, with an indication of the disposition of the request and a brief explanation of the reasons for granting or denying the waiver.

These rules are intended to implement Iowa Code section 99F.4.

[Filed 11/26/90, Notice 9/19/90—published 12/12/90, effective 1/16/91]
[Filed 10/30/97, Notice 7/16/97—published 11/19/97, effective 1/1/98]
[Filed emergency 6/30/04—published 7/21/04, effective 7/1/04]
[Filed 5/18/05, Notice 3/16/05—published 6/8/05, effective 8/1/05]
[Filed 1/22/08, Notice 10/10/07—published 2/13/08, effective 4/1/08][1]
[Editorial change: IAC Supplement 7/2/08]

[1] April 1, 2008, effective date of ARC 6591B delayed 70 days by the Administrative Rules Review Committee at its meeting held March 7, 2008. At its meeting held June 9, 2008, the Committee delayed the effective date until the adjournment of the 2009 Session of the General Assembly.

CHAPTERS 142 to 149
Reserved

# CHAPTER 150
# DIVISION OF CRIMINAL INVESTIGATION CRIMINALISTICS LABORATORY

[Prior to 11/22/06, see 661—Ch 12]

**661—150.1(691) Criminalistics laboratory.** The state criminalistics laboratory, created in Iowa Code section 691.1, is located, pursuant to that section, within the division of criminal investigation.

**150.1(1)** *Identification.* The state criminalistics laboratory shall be known as the division of criminal investigation criminalistics laboratory. Unless the context clearly implies otherwise, the term "laboratory," when used in this chapter, shall mean the division of criminal investigation criminalistics laboratory.

**150.1(2)** *Administration.* The laboratory shall be headed by an administrator who shall report to the director of the division of criminal investigation.

**150.1(3)** *Contact information.*

*a.* The address of the laboratory for receiving mail or shipped materials is:

Iowa DCI Criminalistics Laboratory
2240 South Ankeny Boulevard
Ankeny, Iowa 50023

*b.* The telephone number of the laboratory is (515)725-1500.

*c.* Information regarding the laboratory may be obtained from the department Web site.

NOTE: Currently, information about the laboratory may be found at www.dps.state.ia.us/DCI/Crime_Lab/index.shtml.

**661—150.2(691) Purpose and scope of work.** The laboratory provides forensic science services to law enforcement agencies within the state of Iowa. The laboratory shall, within its capabilities, conduct analyses and comparative studies on physical evidence to aid in any criminal investigation, when requested by a prosecuting attorney, a medical examiner, or a law enforcement agency.

**150.2(1)** *Resource or capability limitations.*

*a.* The laboratory administrator may refuse any request to conduct an analysis when, in the judgment of the administrator, the laboratory is unable to adequately conduct the requested analysis, either because of resource limitations or because the analysis is not within the professional capabilities of laboratory personnel.

*b.* The laboratory administrator may establish a policy excluding evidence of specific types or evidence arising from certain types of cases from being accepted by the laboratory, if the administrator finds that such a policy is necessary either due to resource constraints, safety concerns, or the professional capabilities of laboratory personnel. Any policy adopted pursuant to this paragraph shall be provided to all county attorneys, medical examiners, and law enforcement agencies within Iowa.

*c.* If analysis by the laboratory of specific evidence arising from a criminal investigation in Iowa has been excluded pursuant to either paragraph *"a"* or *"b,"* the administrator may, at the administrator's discretion, assist the agency requesting the analysis in locating the services of another laboratory able to perform the requested analysis.

**150.2(2)** *Exclusion by law.* The laboratory shall only perform analyses which have arisen from, or will aid in, criminal investigations or which are otherwise provided for by law.

**661—150.3(691) Laboratory capabilities.** The laboratory is capable of performing any forensic scientific analysis for which a laboratory staff member has received appropriate training and for which the necessary equipment and materials are available to the staff member performing the analysis.

The following subrules catalogue and explain specific laboratory capabilities. These descriptions and explanations are provided for informational purposes and in no way limit the authority of the laboratory to perform any analysis for which a staff person is appropriately trained and for which necessary equipment and materials are available. Further information regarding the current forensic science capabilities of the laboratory may be obtained in the Iowa Criminalistics Laboratory Quality Assurance Manual, published by the division of criminal investigation criminalistics laboratory.

**150.3(1)** *Crime scene response.* The laboratory may assist law enforcement agencies, when appropriate, by responding to a crime scene and may examine, collect and preserve physical evidence.

**150.3(2)** *Breath alcohol section.* The breath alcohol section provides testing, approval, repair, maintenance and certification of breath testing instruments, provides officer training and certification in the use of evidential breath testing equipment, and provides expert testimony in the area of breath testing instrumentation and the effects of alcohol on the human body.

**150.3(3)** *Controlled substance identification.* The laboratory will identify and quantify, when appropriate, materials suspected to contain controlled substances, and will identify items of significance recovered from clandestine drug laboratories.

**150.3(4)** *DNA.* The laboratory will examine evidence for human biological samples and characterize the samples using DNA technologies.

**150.3(5)** *DNA profiling.* The laboratory will generate and maintain DNA profiles from qualifying offenders.

**150.3(6)** *Firearms.* The firearms section examines firearms, ammunition and ammunition components to determine whether a specific firearm fired a specific bullet or cartridge case or, lacking a specific firearm, to determine the possible type of firearm which could have fired the evidentiary bullets and cartridge cases. The firearms section also reconstructs shooting scenes to determine the distance from the muzzle of the firearm to the target, and examines firearms to determine if they function as designed or have been altered from the original design.

The firearms section also maintains a reference collection of firearms and ammunition for comparison purposes and is responsible for the inventory and destruction of firearms forfeited to the laboratory under the Iowa Code.

**150.3(7)** *Latent prints and impressions.* The latent prints and impressions section:

*a.* Examines evidence for visible or latent prints.

*b.* Makes comparisons to known friction skin exemplars of the fingers, palms and soles of the feet.

*c.* Examines footwear, tire tracks, and other impression evidence and compares the evidence to known exemplars.

**150.3(8)** *Photography.* The photography section provides photographic services, both digital and film-based, required by all divisions of the department of public safety.

**150.3(9)** *Questioned documents.* The questioned documents section characterizes and compares handwritten and machine-produced documents to determine facts about their origins.

**150.3(10)** *Tool marks.* The tool marks section examines tools and tool marks to determine whether a specific tool produced a specific mark on an item of evidence or, lacking the tool, what type of tool produced a specific mark.

**150.3(11)** *Toxicology.* The toxicology section examines biological samples for the presence of ethyl alcohol and common drugs of abuse.

**150.3(12)** *Trace and arson.* The trace and arson section examines submitted materials to characterize, identify, or compare them using various analytical techniques. Examples of materials include but are not limited to: ignitable liquids, glass, paint, soil, building materials, explosives, and fibers.

**661—150.4(691) Evidence submission to the laboratory.**

**150.4(1)** Evidence may be submitted to the laboratory by:

*a.* Any law enforcement agency in Iowa;

*b.* The Iowa department of corrections;

*c.* Any other criminal or juvenile justice agency, with the approval of the laboratory administrator; or

*d.* Any other state agency, with the approval of the laboratory administrator.

**150.4(2)** Evidence may be submitted to the laboratory via regular, certified, or registered mail or personal service. All evidence submitted must be accompanied by a standard laboratory receipt form that describes each item and its container, if any, and lists examination requests.

NOTE: The standard laboratory receipt form may be found on the Web site of the department. Currently, it is located at http://www.dps.state.ia.us/DCI/Crime_Lab/index.shtml.

**150.4(3)** Evidence submitted to the laboratory which is not personally delivered shall be packaged in such a manner that laboratory personnel can determine that the package has not been opened while in transit. If the laboratory receives an unsealed or damaged package, the laboratory may refuse to process such evidence, if the integrity of the evidence has been compromised.

**661—150.5(17A,691) Distribution of reports.**

**150.5(1)** A copy of each completed report of analyses performed by the laboratory shall be provided to the submitting officer and to the prosecuting attorney. The prosecuting attorney shall be responsible for providing copies of any laboratory report to the defendant or defendants as required by law.

**150.5(2)** Results of laboratory analyses shall not be made available to any unauthorized person or organization.

**661—150.6(17A,691) Disposition of evidence.**

**150.6(1)** Evidence will be returned to the submitting agency, unless one of the following conditions applies:

*a.* Retention of the evidence would be beneficial for future laboratory analysis.

*b.* Returning the evidence presents a hazard to health or safety. Any required notice to the defendant of destruction of evidence pursuant to this paragraph is the responsibility of the prosecuting attorney.

**150.6(2)** Evidence shall not be transferred or submitted to any person or agency other than the submitting agency without an applicable court order, unless authorized by the submitting agency.

These rules are intended to implement Iowa Code chapter 691.

[Filed 6/30/75]
[Filed 4/12/76, Notice 3/8/76—published 5/3/76, effective 6/7/76]
[Filed emergency 6/4/76—published 6/28/76, effective 6/4/76]
[Filed 2/28/78, Notice 1/11/78—published 3/22/78, effective 4/26/78]
[Filed emergency 1/25/79—published 2/21/79, effective 1/25/79]
[Filed 6/7/79, Notice 5/2/79—published 6/27/79, effective 8/2/79]
[Filed 4/1/88, Notice 9/23/87—published 4/20/88, effective 5/25/88]
[Filed 11/2/06, Notice 9/13/06—published 11/22/06, effective 1/1/07]

CHAPTERS 151 to 155
Reserved

# CHAPTER 156
# DNA DATABASE

**661—156.1(81GA,HF619) Establishment of DNA database.** There is established a DNA database within the division of criminal investigation criminalistics laboratory.

These rules govern the administration of the DNA database and the collection, submission, analysis, identification, storage, disposition, and expungement of DNA records gathered for the DNA database. These rules do not apply to the collection and handling of DNA samples gathered as evidence in the course of criminal investigations.

**661—156.2(81GA,HF619) Definitions.** The following definitions apply to rules 661—156.1(81GA,HF619) through 661—156.10(81GA,HF619):

*"Administrator"* means the administrator of the division of criminal investigation criminalistics laboratory.

*"Commissioner"* means the commissioner of public safety.

*"Database"* means the DNA database located in the division of criminal investigation criminalistics laboratory.

*"Department"* means the Iowa department of public safety.

*"Director"* means the director of the division of criminal investigation.

*"Division"* means the division of criminal investigation (DCI).

*"DNA"* means deoxyribonucleic acid.

*"Expungement"* means the removal of information from the DNA database, effectively severing any ability to link a DNA profile and an individual.

*"Laboratory"* means the division of criminal investigation criminalistics laboratory.

**661—156.3(81GA,HF619) Administration of DNA database.** The DNA database shall be under the direct supervision of a supervising criminalist employed by the laboratory and designated by the administrator.

**661—156.4(81GA,HF619) Collection of DNA samples.** Samples of DNA shall be collected from any person required to submit a sample pursuant to the provisions of 2005 Iowa Acts, House File 619.

**156.4(1)** The sample shall be collected by the agency to which custody or responsibility for supervision has been assigned by the court issuing the sentencing order.

**156.4(2)** Each DNA sample shall be collected as soon as practical after an agency assumes custody or supervision of the person required to submit the DNA sample and shall be submitted to the laboratory in accordance with rule 661—156.5(81GA,HF619).

**156.4(3)** Each DNA sample shall be collected using a DNA collection kit provided by the laboratory, following the instructions provided for the kit by the laboratory.

EXCEPTION: A DNA sample may be collected without the use of a DNA collection kit provided by the laboratory. If a sample is collected without the use of a kit, the person submitting the sample shall include a signed and dated statement describing the collection procedure.

**661—156.5(81GA,HF619) Submission of DNA samples.**

**156.5(1)** All samples collected for inclusion in the DNA database should be submitted to the following address:

Iowa DCI Criminalistics Laboratory
State Capitol
1015 East Grand Avenue
Des Moines, Iowa 50309-9672

EXCEPTION: Each sample submitted in a package with a preprinted mailing address or with a mailing label with a preprinted address, when such package or label has been provided by the Division of Criminal Investigation Criminalistics Laboratory, shall be mailed to the preprinted address. Any

other sample shall be mailed in accordance with instructions provided by the Division of Criminal Investigation Criminalistics Laboratory.

**156.5(2)** Each sample submitted shall be accompanied by a completed DNA sample donor identification form included in the DNA collection kit provided by the laboratory. If the sample is submitted without the donor identification form, the sample shall be accompanied by a statement signed and dated by the person submitting it, with at least the following information identifying the subject of the DNA sample: full name, date of birth, and a clear fingerprint. Additional identifying information, such as the social security number of the person providing the sample or identifying numbers assigned by state agencies, shall be provided if available.

**661—156.6(81GA,HF619) Analysis of DNA samples.** Samples of DNA submitted to the laboratory shall be analyzed by laboratory personnel and the results of the analysis entered into the database in accordance with the provisions of "Quality Assurance Standards for Convicted Offender DNA Databasing Laboratories," published by the DNA Advisory Board to the Federal Bureau of Investigation, April 1999.

EXCEPTION: Analysis of DNA samples may be conducted by other laboratories under contract with the department, with the approval of the administrator. Any other laboratory conducting analysis of DNA samples for inclusion in the database shall comply with the requirements and procedures to which the division of criminal investigation criminalistics laboratory is subject under this rule.

**661—156.7(81GA,HF619) Identification of DNA samples.** Each sample of DNA submitted for inclusion in the database shall be identified by a unique number that will reference the full name of the person whose sample is submitted, the person's date of birth, and a clear fingerprint taken from the person.

**661—156.8(81GA,HF619) Storage of DNA samples.** Samples of DNA submitted for inclusion in the database shall be stored under normal office conditions.

**661—156.9(81GA,HF619) Disposition of DNA samples.** Any DNA sample submitted to the laboratory for inclusion in the database shall be retained for at least 30 days after the sample has been analyzed and the results of the analysis entered into the database. Samples may be destroyed 30 days after entry into the database.

**661—156.10(81GA,HF619) Expungement of DNA samples.**

**156.10(1)** A person whose DNA record has been included in the database may request expungement of the DNA record from the database based upon the reversal on appeal or dismissal of the case of the person's conviction, adjudication, or civil commitment that caused the submission of the DNA sample. The request shall be in writing and shall include a certified copy of the final court order reversing the conviction, adjudication, or civil commitment; a certified copy of the dismissal; and any other information necessary to ascertain the validity of the request. The request shall clearly state that it is a request to expunge a record from the DNA database and shall state the specific basis for the request.

A request to expunge the DNA record shall be addressed as follows:

Administrator
Iowa Division of Criminal Investigation Criminalistics Laboratory
2240 S. Ankeny Blvd.
Ankeny, Iowa 50023-9093

**156.10(2)** Action on expungement request.

*a.* The division, upon receipt of a written request that validates reversal on appeal of a person's conviction, adjudication, or commitment, and subsequent dismissal of the case, or upon receipt of a written request by a person who voluntarily submitted a DNA sample pursuant to 2005 Iowa Acts, House File 619, section 3, subsection 3, paragraph *"b,"* shall expunge all of the DNA records and identifiable information of the person in the database. The person or the person's representative shall be notified upon completion of such action.

*b.* If the division determines that the person is otherwise obligated to submit a DNA sample, the DNA record shall not be expunged.

*c.* If the division denies an expungement request, the division shall notify the person requesting the expungement of the decision not to expunge the DNA record and the reason supporting the decision. A person whose request to expunge a DNA record from the database is denied may appeal that decision to the commissioner within 30 days of the date of the letter communicating the denial. Appeals shall be treated as requests for contested case proceedings, and such proceedings shall be subject to the provisions of rules 661—10.301(17A) through 661—10.332(17A), except that such requests shall be addressed as follows:

Commissioner
Iowa Department of Public Safety
Wallace State Office Building
Des Moines, Iowa 50319

**156.10(3)** A DNA record shall not be expunged pursuant to this rule if expungement or destruction of the DNA record would destroy evidence related to another person.

These rules are intended to implement 2005 Iowa Acts, House File 619, division I.

[Filed emergency 6/30/05—published 7/20/05, effective 7/1/05]
[Filed 11/3/05, Notice 7/20/05—published 11/23/05, effective 1/1/06]

# CHAPTER 157
# DEVICES AND METHODS TO TEST BODY FLUIDS FOR ALCOHOL OR DRUGS

**661—157.1(321J) Approval of devices and methods to test for alcohol or drug concentration.** The commissioner, by these rules, approves the following devices and methods to take a specimen of a person's breath or urine for the purpose of determining the alcohol or drug concentration.

**661—157.2(321J) Breath testing.**

**157.2(1)** A peace officer desiring to perform testing of a subject's breath for the purpose of determining the alcohol concentration shall employ, or cause to be used, a breath testing device of a type meeting the minimum performance requirements established in Highway Safety Programs; Model Specifications for Devices to Measure Breath Alcohol, Federal Register, Volume 58, No. 179 (September 17, 1993), pp. 48705-48708. All devices so used must be certified to be in proper working order within a period of one year immediately preceding use according to procedures specified for that device.

Procedures for certification or recertification of the Datamaster cdm are contained in the document Certification or Recertification of the Datamaster cdm, published by the division of criminal investigation criminalistics laboratory. A copy of the current version of this document may be obtained by contacting the division of criminal investigation criminalistics laboratory at 2240 South Ankeny Boulevard, Ankeny, Iowa 50023, or at the Web site of the department of public safety.

NOTE: The current address for information on the Datamaster cdm from the criminalistics laboratory is: http://www.dps.state.ia.us/DCI/Crime_Lab/Evidential_Breath_Testing/index.shtml.

The operator of an evidentiary breath testing device shall have been certified as competent in the operation of the breath testing device, and shall proceed in accordance with the instructions included in an operating manual furnished by the division of criminal investigation criminalistics laboratory. An operating manual, with number and date, specific to a particular approved device and prepared by the division of criminal investigation criminalistics laboratory shall be available to operators using the device. The current version of the operating manual for each device currently approved for use in Iowa may be obtained by contacting the division of criminal investigation criminalistics laboratory at 2240 South Ankeny Boulevard, Ankeny, Iowa 50023, or from the department's Web site.

NOTE: The operating manual for the Datamaster cdm is titled "Operating the Datamaster cdm." The current location of information regarding the Datamaster cdm on the department's Web site is: http://www.dps.state.ia.us/DCI/Crime_Lab/Evidential_Breath_Testing/index.shtml.

All certifications of devices shall be made by the division of criminal investigation criminalistics laboratory. All certifications of operators shall be made by the division of criminal investigation criminalistics laboratory or a designee. A designee shall be a person trained and certified by the division of criminal investigation criminalistics laboratory.

**157.2(2)** A breath testing device is a device designed and constructed to measure a subject's breath alcohol concentration by utilizing a sample of the subject's breath.

**157.2(3)** Although any breath testing device that meets the minimum performance requirements established by the National Highway Traffic Safety Administration, and cited in subrule 157.2(1), is authorized by the commissioner to be employed or to be caused to be used to determine the alcohol concentration, the following evidentiary device is being used in Iowa and meets the standards:

*a.* Datamaster cdm, National Patents Analytical Systems, Inc.

*b.* Reserved.

**661—157.3(321J) Urine collection.** A peace officer who collects a sample of a subject's urine for the purpose of determining alcohol or drug concentration shall proceed as follows.

**157.3(1)** The collection shall be made in the presence of a peace officer or other reliable person under the supervision of a peace officer. The peace officer or other person in the presence of the subject shall be of the same gender as the subject.

**157.3(2)** As soon as practicable, the subject shall urinate into a urine alcohol kit-supplied bottle, cup or other suitable container which is clean, dry, and free from any visible contamination. Anticoagulant and antimicrobial substances in a blood or urine kit do not constitute visible contamination.

**157.3(3)** The peace officer shall collect a second urine void for alcohol testing in a suitable container which is clean, dry, and free from visible contamination. If a second void cannot be collected, the peace officer shall submit a sample from the first void and shall inform the Iowa division of criminal investigation criminalistics laboratory on the laboratory receipt form that the sample is from a first void. It is not necessary that the subject's bladder be completely emptied.

**157.3(4)** When collection of the sample for alcohol testing has been completed, the peace officer shall cause a portion of the collected sample to be transferred to a test tube containing 100 milligrams of sodium fluoride and anticoagulant.

**157.3(5)** A listing of test kits known to meet the requirements of subrules 157.3(2), 157.3(3) and 157.3(4) may be found on the criminalistics laboratory Web site. Any peace officer wishing to use a test kit which is not listed should inquire of the criminalistics laboratory as to whether the other test kit meets the requirements. Any provider of test kits may request the addition of a kit to the list by sending a sample kit to the administrator of the criminalistics laboratory with a cover letter requesting that the kit be added to the list of kits known to meet the requirements of this subrule.

NOTE: The current location of information about test kits on the laboratory Web site is: http://www.dps.state.ia.us/DCI/Crime_Lab/Forensic_Toxicology/index.shtml.

**157.3(6)** If the peace officer requests additional toxicological testing, the remainder of the sample may be retained in a container and sent for analysis to the Iowa division of criminal investigation criminalistics laboratory.

**157.3(7)** The peace officer shall label the container showing the date and time the sample was collected and identifying the peace officer, the subject, and the person present during the collection of the sample if other than the peace officer.

**661—157.4(321J) Submission of samples for alcohol and drug testing to the criminalistics laboratory.** Any sample of urine or blood may be submitted to the division of criminal investigation criminalistics laboratory or other appropriate laboratory via ordinary mail, private courier, or personal delivery.

**661—157.5(321J) Preliminary breath screening test.**

**157.5(1)** A peace officer desiring to perform a preliminary screening test of a person's breath shall use a device approved by the division of criminal investigation criminalistics laboratory. Such devices are approved for accuracy and precision using a dry gas standard or breath simulating device. The division of criminal investigation criminalistics laboratory shall employ scientifically established tests or methods appropriate to a particular device in determining whether the device meets an acceptable standard for operation including accuracy, or the laboratory may, at its discretion, accept test results from another laboratory. The standards shall include the requirement that in all cases the device shall indicate the alcohol concentration on a numerical display. Devices shall be of a type that may be calibrated on a monthly basis by officers in the field.

The division of criminal investigation criminalistics laboratory shall maintain a list of devices approved by the commissioner for use as preliminary breath screening devices. The list of currently approved devices is available on the Web site of the department.

**157.5(2)** Any peace officer using an approved device shall follow the instructions furnished by the manufacturer for use of such a device. The calibration of each unit shall be checked at least once per month, and the device shall be calibrated, if necessary, using a dry gas standard. The officer or officer's department shall maintain a record of each calibration. This record shall include:

*a.* The identity of the officer performing the calibration.

*b.* The date.

*c.* The value and type of standard used.

*d.* The unit type and identification number.

**661—157.6(123) Chemical test—alcohol concentration—public intoxication.** All devices and methods approved in this chapter for the purpose of determining a person's alcohol concentration for evidential purposes under Iowa Code chapter 321J, and the devices otherwise approved in this chapter only for use in performing preliminary breath screening tests, are equally approved for testing to determine alcohol concentration in connection with arrests for public intoxication under Iowa Code section 123.46. The chemical test results shall be expressed in terms of alcohol concentration as defined in Iowa Code section 321J.1.

**661—157.7(321J) Detection of drugs other than alcohol.**

**157.7(1)** Adoption of federal standards. Initial test requirements adopted by the federal Substance Abuse and Health Services Administration in "Mandatory Guidelines for Federal Workplace Drug Testing Programs," 59 FR 29908, as amended in "Revisions to the Mandatory Guidelines," 62 FR 51118, are hereby adopted as standards for determining detectable levels of controlled substances in the division of criminal investigation criminalistics laboratory initial screening for controlled substances detected by the presence of the following: marijuana metabolites, cocaine metabolites, opiate metabolites, phencyclidine, and amphetamines. The following table shows the minimum levels of these substances which will result in a finding that a controlled substance is present at a detectable level:

| Substance | Minimum Level (ng/ml) |
|---|---|
| Marijuana metabolites | 50 |
| Cocaine metabolites | 300 |
| Opiate metabolites | 2000 |
| Phencyclidine | 25 |
| Amphetamines | 1000 |

NOTE: "ng/ml" means "nanograms per milliliter."

**157.7(2)** Reserved.

These rules are intended to implement Iowa Code section 123.46 and chapter 321J.

[Filed 4/2/07, Notice 9/13/06—published 4/25/07, effective 6/1/07]
[Filed emergency 12/21/07—published 1/16/08, effective 1/1/08]

CHAPTERS 158 to 173
Reserved

# CHAPTER 174
# RETAIL SALES OF PSEUDOEPHEDRINE

**661—174.1(81GA,SF169) Electronic logbooks.** A logbook of retail sales of products containing pseudoephedrine, as required in 2005 Iowa Acts, Senate File 169, may be recorded in any electronic format, provided that the retailer maintaining the logbook provides to any peace officer a printed copy of the information required to be maintained in the same manner as would be provided if the logbook were maintained on paper.

NOTE 1: Information required to be recorded in the logbook includes the legible signature of the purchaser and the printed name and address of the purchaser.

NOTE 2: This rule applies only to the content of the information provided to a peace officer from a logbook, not to the conditions or circumstances under which information from a logbook is provided to a peace officer.

**661—174.2(81GA,SF169) Reporting of civil penalties.** Within 30 days of the assessment of a civil penalty upon a retailer or employee of a retailer of products containing pseudoephedrine for a violation of the provisions of 2005 Iowa Acts, Senate File 169, the city or county which has enforced the civil penalty shall report the following information to the Director, Iowa Division of Narcotics Enforcement, Wallace State Office Building, East 9th and Grand, Des Moines, Iowa 50319:

1. Name and address of the retailer.
2. Name and birth date of the employee, if the civil penalty was assessed against an employee. If the assessment was against more than one employee, the name and birth date of each employee subject to the assessment shall be reported.
3. Date of the violation.
4. Description of the violation.
5. Amount of the civil penalty assessed.

These rules are intended to implement 2005 Iowa Acts, Senate File 169.

[Filed emergency 5/18/05—published 6/8/05, effective 5/21/05]
[Filed 11/3/05, Notice 6/8/05—published 11/23/05, effective 1/1/06]

CHAPTERS 175 to 200
Reserved

# CHAPTER 201
# GENERAL FIRE SAFETY REQUIREMENTS

**661—201.1(100) Scope.** The provisions of this chapter apply generally to buildings, structures, and facilities in which people congregate if the building, structure, or facility most recently began its current use on or after January 1, 2007, unless the building, structure, or facility is subject to provisions of 661—Chapter 202 or 661—Chapter 205. "Current use" includes the intended use of a building, structure, or facility under construction or awaiting required approval for that intended use.

A building, structure, or facility which most recently began its current use prior to January 1, 2007, is generally subject to the requirements in effect on the date on which the current continuous use of the building, structure, or facility began, unless either of the following conditions applies:

1. The fire marshal finds that any condition that is in violation of the provisions of this chapter, but that is permissible under the requirements in effect on the date on which the current continuous use of the building, structure, or facility began, creates an imminent threat to the safety of individuals or the public. If the fire marshal so finds, the fire marshal may order the correction of the condition found to create the hazard.

2. There were no fire safety requirements established by the fire marshal which applied to the building, structure, or facility at the time its current continuous use began. If no such requirements have been established by the fire marshal for the continued operation of such a building, structure, or facility, the provisions of this chapter shall apply as though the current continuous use of the building, structure, or facility began on or after January 1, 2007.

**661—201.2(100) General provisions.** The following publications or indicated portions thereof are hereby adopted by reference as general fire safety requirements and shall apply to all occupancies other than those to which conflicting provisions specifically apply or to which provisions specific to an occupancy explicitly exclude these provisions or any individual provision contained therein.

**201.2(1)** International Fire Code, 2006 edition, published by the International Code Council, 5203 Leesburg Pike, Suite 600, Falls Church, VA 22041, with the following amendments:

*a.* Delete sections 101 and sections contained therein.

*b.* Delete sections 102.1 and 102.2.

*c.* Delete section 102.3 and insert in lieu thereof the following new section:

102.3 Change of use or occupancy. No change shall be made in the use or occupancy of any structure that would place the structure in a different division of the same group or occupancy or in a different group of occupancies, unless such structure is made to comply with the requirements of this chapter and any applicable building code. Subject to the approval of the fire marshal, the use or occupancy of an existing structure shall be allowed to be changed and the structure is allowed to be occupied for purposes in other groups without conforming to all the requirements of this chapter for those groups, provided the new or proposed use is less hazardous, based on life and fire risk, than the existing use.

*d.* Delete sections 102.4, 102.7, and 102.8.

*e.* Delete sections 103, 104, 105, 106, and 108 and sections therein.

*f.* Delete section 109.3.

NOTE: Section 109.3.1 is retained.

*g.* Delete section 111.4.

*h.* Delete section 307.2.

*i.* Delete section 307.3 and insert in lieu thereof the following new section:

307.3 Extinguishment authority. The state fire marshal or an employee of the fire marshal division authorized to do so by the fire marshal, or local fire chief or member of the local fire department authorized to do so by the fire chief, is authorized to order the extinguishment by the permit holder, another person responsible or the fire department of open burning that creates or adds to a hazardous or objectionable situation.

*j.* Delete section 308.3.1.1.

NOTE: Any local jurisdiction that wishes to maintain the restrictions contained in section 308.3.1.1 may do so by including this section or equivalent language in a local fire ordinance.

*k.* Delete section 607.1 and insert in lieu thereof the following new section:

607.1 Required. New elevators shall be provided with Phase I emergency recall operation and Phase II emergency in-car operation in accordance with ASME A17.1.

*l.* Add the following new sections:

607.4 Sprinklers in Elevator Hoistways.

When a sprinkler is installed in a hoistway, the installation shall comply with rule 875—73.25(89A), adopted by the elevator safety board.

607.5 Elevator machine rooms.

Sprinklers are not required in elevator machine rooms, unless required by another provision of law, such as a local fire ordinance or an applicable federal regulation. When a sprinkler is installed in an elevator machine room, the installation shall comply with rule 875—73.25(89A).

Storage of any equipment or materials, other than equipment directly related to elevator operation, shall not be allowed in elevator machine rooms.

Each elevator machine room shall have a smoke detector and a heat detector, each of which shall be connected to the building's fire alarm system.

Security shall be maintained in elevator machine rooms in accordance with the provisions of the applicable standards adopted by the elevator safety board, as set forth in rule 875—72.1(89A). "Security" includes, but is not limited to, restriction of access to machine rooms to authorized personnel only and limitations on the duplication and distribution of keys to machine rooms. If none of the standards adopted in rule 875—72.1(89A) apply, then access to elevator machine rooms shall be limited to authorized personnel only.

*m.* Delete section 609.1 and insert in lieu thereof the following new section:

609.1 General. Commercial kitchen exhaust hoods shall comply with the requirements of NFPA 96, 2004 edition.

*n.* Amend section 906.1 by deleting the exception.

*o.* Delete Chapter 22, except for section 2211 and sections contained therein.

*p.* Delete Chapter 33.

*q.* Amend section 3401.1 by adding the following new exception:

EXCEPTION: This chapter shall not apply to any installation subject to the provisions of 661—Chapter 51.

*r.* Amend section 3801.1 by adding the following exception:

EXCEPTION: This chapter shall not apply to any installation subject to the provisions of 661—Chapter 51.

*s.* Delete "International Fuel Gas Code" wherever it appears and insert in lieu thereof "rule 661—51.100(101)."

*t.* Delete "ICC Electrical Code" wherever it appears and insert in lieu thereof "rule 661—201.3(100)."

*u.* Delete "International Plumbing Code" wherever it appears and insert in lieu thereof "641—Chapter 25."

NOTE: 641—Chapter 25 is the "State Plumbing Code," adopted by the department of public health.

*v.* Adopt Appendices B, C, and D.

*w.* Delete Appendices A, E, F, and G.

**201.2(2)** The following chapters and section of the International Building Code, 2006 edition, published by the International Code Council, 5203 Leesburg Pike, Suite 600, Falls Church, VA 22041:

*a.* Chapter 2.

*b.* Chapter 3.

*c.* Chapter 4.

*d.* Chapter 5.

*e.* Chapter 6.

*f.* Chapter 7.

*g.* Section 804.

**661—201.3(100) Electrical installations.** Electrical installations shall comply with the provisions of NFPA 70, National Electrical Code, 2005 edition.

**661—201.4(100) Existing buildings or structures.** Additions or alterations to any building or structure shall comply with the requirements of this chapter for new construction. Additions or alterations shall not be made to an existing building or structure that will cause the existing building or structure to be in violation of any provisions of 661—Chapter 201. An existing building plus additions shall comply with the height and area provisions of Chapter 5 of the International Building Code, 2006 edition. Portions of the structure not altered and not affected by the alteration are not required to comply with the requirements established in 661—Chapter 201 for a new structure.

**661—201.5(100) Recognition of local fire ordinances and enforcement.** With the exception of a health care facility subject to the requirements of 661—Chapter 205, a building, structure, or facility shall be deemed to be in compliance with the requirements established in rules of the fire marshal if all of the following conditions are met:

1. The building, structure, or facility is in a local jurisdiction which has adopted a local fire ordinance which adopts by reference any edition of the International Fire Code, published by the International Code Council, 5203 Leesburg Pike, Suite 600, Falls Church, VA 22041; any edition of NFPA 1, Uniform Fire Code, published by the National Fire Protection Association; or the Uniform Fire Code, 1997 edition, published by the Western Fire Chiefs Association.
2. The local fire ordinance is enforced through a process of review and approval of construction plans for compliance with the local fire ordinance and a process of regular inspections for compliance with the local fire ordinance.
3. The building, structure, or facility is subject to regular fire safety inspections.
4. The local jurisdiction has verified, during its most recent inspection, including any follow-up inspections, that the building, structure, or facility is in compliance with the local fire ordinance.

Notwithstanding any conflicting provisions contained in any code adopted by reference in this chapter or by any local fire ordinance, compliance with the provisions of 661—Chapter 51 is required at any location or facility in which flammable or combustible liquids are stored, handled, or used, other than incidental use.

These rules are intended to implement Iowa Code chapter 100.

[Filed 11/2/06, Notice 9/13/06—published 11/22/06, effective 1/1/07]

# CHAPTER 202
# REQUIREMENTS FOR SPECIFIC OCCUPANCIES

**661—202.1(100) Scope.** The provisions of this chapter apply solely to buildings, structures, and facilities currently being used in the specific ways described in this chapter. All other buildings, structures, and facilities in which people congregate are subject to the provisions of 661—Chapter 201 or 661—Chapter 205.

This rule is intended to implement Iowa Code chapter 100.

**661—202.2(237) Facilities in which foster care is provided by agencies to fewer than six children.** Any facility, including a single-family residence, within which foster care is provided by an agency to fewer than six children, shall meet each of the requirements established in this rule.

**202.2(1)** Battery-operated smoke detectors shall be installed in each sleeping room and on each floor of the home and shall be installed in compliance with the manufacturer's instructions.

**202.2(2)** Each exit and exit path shall remain clear and unobstructed at all times.

**202.2(3)** A five-pound 2A:10B:C fire extinguisher shall be installed in the primary caregiver's sleeping room. Additional extinguishers may be provided. Each extinguisher in the facility shall be inspected yearly by a third party in accordance with NFPA 10, Standard for Portable Fire Extinguishers, 2007 edition.

**202.2(4)** No combustible items shall be stored within a three-foot clearance of furnaces, hot water heaters, and electrical panels.

**202.2(5)** A carbon monoxide detector shall be installed on each floor of the residence. A detector shall be installed in proximity to any gas-fired appliance. All detectors shall be installed in accordance with the manufacturer's installation instructions.

**202.2(6)** If propane is used in the facility, a propane leak detector shall be installed in proximity to each propane-fired appliance. All detectors shall be installed in accordance with the manufacturer's installation instructions.

**202.2(7)** An evacuation plan shall be maintained, and fire drills shall be conducted at least once every other month.

**202.2(8)** If a child is sleeping in a basement room, then an egress window shall be provided in the room. "Egress window" means an existing operable window with a clear opening area of not less than 5.7 square feet, and with a minimum opening height and width of 24 inches and 20 inches, respectively.

This rule is intended to implement Iowa Code section 237.3, subsection 3.

**661—202.3(137C) Bed and breakfast inns.**

**202.3(1)** The following definitions apply to rule 661—202.3(137C):

*"Bed and breakfast home"* means a private residence which provides lodging and meals for guests, in which the host or hostess resides and in which no more than four guest families are lodged at the same time and which, while it may advertise and accept reservations, does not hold itself out to the public to be a restaurant, hotel, or motel; does not require reservations; and serves food only to overnight guests. Rule 661—202.3(137C) shall not apply to bed and breakfast homes. However, a bed and breakfast home shall have a smoke detector in proper working order in each sleeping room and a fire extinguisher in proper working order on each floor.

*"Bed and breakfast inn"* means a building equipped, used, or advertised as or held out to the public to be an inn, hotel, motel, motor inn, or place where sleeping accommodations are furnished for hire to transient guests and which has nine or fewer guest rooms.

**202.3(2)** *Appliances.* Heating, cooking and gas and electrical equipment and appliances must conform with nationally recognized codes and standards and be installed and maintained in accordance with the manufacturer's recommendations. If the building has an operable solid fuel fireplace, all components must be cleaned and maintained in accordance with NFPA 211, 2006 edition.

**202.3(3)** *Smoke detectors.* Each bed and breakfast inn shall have an operable smoke detector in each guest room, at the top of each stairwell, and at intervals not to exceed 30 feet in each exit corridor. Detectors shall be installed and maintained in accordance with NFPA 72, 2007 edition.

*a. Existing facilities.* In bed and breakfast inns which begin operation or are constructed or remodeled prior to February 1, 2002, required smoke detectors may be battery-operated.

*b. New facilities.* Each bed and breakfast inn which began operation or is constructed or remodeled on or after February 1, 2002, shall be equipped with a system of interconnected smoke detectors with detectors at the top of each stairwell and at intervals not to exceed 30 feet in each exit corridor. These smoke detectors shall receive primary power from the building's electrical wiring and shall include battery backup. Each guest room shall be equipped with a smoke detector which may be a single station detector.

**202.3(4)** *Emergency lighting.* Each bed and breakfast inn must be equipped with approved emergency lighting so located and directed in a manner that will illuminate the routes of travel from each guest-occupied room to the outside of the building.

**202.3(5)** *Windows.* Each bed and breakfast inn guest sleeping room must have at least one outside window that is openable without the use of tools or special knowledge. The window must be large enough that, when open and without breaking glass, it will permit the emergency egress of guests.

**202.3(6)** *Exits.* Each story that has one or more guest sleeping rooms must have two means of exit that are remote from each other and so arranged and constructed as to minimize any possibility that both may be blocked by any one fire or other emergency.

**202.3(7)** *Exit door markings.* Exit doors must be marked in accordance with the International Fire Code, 2006 edition, chapter 10.

**202.3(8)** *Fire extinguishers.* Fire extinguishers must be installed and maintained in accordance with NFPA 10, 2007 edition.

**202.3(9)** *Smoking prohibited.* Smoking is not permitted in any sleeping room, and rooms shall be posted with plainly visible signs so stating.

**202.3(10)** *Additional prohibitions.* Candles, lamps with power sources other than electricity and solid fuel fireplaces shall not be used in guest sleeping rooms.

**202.3(11)** *Directions.* Each bed and breakfast inn shall have clearly displayed in each guest sleeping room printed directions and a diagram for emergency evacuation procedures. These directions must include the primary route to the outside and how to use the emergency egress window in the event the primary route cannot be traversed.

This rule is intended to implement Iowa Code section 137C.35.

**661—202.4(100) Existing jails and correctional facilities.** Any jail, correctional facility, detention facility, holding facility, or prison which has operated continuously as such a facility since prior to January 1, 2007, shall comply with the provisions of NFPA 101, Life Safety Code, 1994 edition, chapter 15.

NOTE: Any jail, correctional facility, detention facility, holding facility, or prison which began continuous operation as such a facility on or after January 1, 2007, is subject to the provisions of 661—Chapter 201.

This rule is intended to implement Iowa Code chapter 100.

[Filed 11/2/06, Notice 9/13/06—published 11/22/06, effective 1/1/07]

CHAPTERS 203 and 204
Reserved

# CHAPTER 205
# FIRE SAFETY REQUIREMENTS FOR HOSPITALS AND HEALTH CARE FACILITIES

[Prior to 4/2/03, see rules 661—5.550(100) to 661—5.603(100)]
[Prior to 6/22/05, see rules 661—5.900(100) to 661—5.950(135C)]

**661—205.1(100) Definitions.** The following definitions apply to rules 661—205.1(100) through 661—205.25(100).

*"Ambulatory health care facility"* means a facility or portion thereof used to provide services or treatment that provides, on an outpatient basis, treatment for one or more patients that renders the patients incapable of taking action for self-preservation under emergency conditions without the assistance of others; or provides, on an outpatient basis, anesthesia that renders the patient incapable of taking action for self-preservation under emergency conditions without the assistance of others.

*"Existing"* means that a facility (1) has been in continuous operation under its current classification of occupancy since before September 11, 2003, and has not undergone renovation or remodeling, including an addition, on or after September 11, 2003, or (2) received plan approval for initial construction or for its most recent renovation or remodeling project, including an addition, if any, from the building code bureau of the fire marshal division prior to March 11, 2003.

*"Hospice"* means a facility licensed or seeking licensure pursuant to Iowa Code section 135J.2.

*"Hospital"* means a facility licensed or seeking licensure pursuant to Iowa Code chapter 135B.

*"Intermediate care facility for the mentally retarded"* means a facility licensed or seeking licensure pursuant to Iowa Code section 135C.2(3)*"c."*

*"New"* means that a facility (1) commenced continuous operation under its current classification of occupancy on or after September 11, 2003, (2) has undergone renovation or remodeling, including an addition, on or after September 11, 2003, or (3) received plan approval from the building code bureau of the fire marshal division for the initial construction of the facility or the most recent renovation of or addition to the facility on or after March 11, 2003.

*"NFPA"* means the National Fire Protection Association, Batterymarch Park, Quincy, MA 02269. References to the form "NFPA xx," where "xx" is a number, refer to the NFPA standard or pamphlet of the corresponding number.

*"Nursing facility"* means a facility licensed or seeking licensure pursuant to Iowa Code section 135C.6, including a nursing facility for intermediate care or a nursing facility for skilled care.

**661—205.2** to **205.4** Reserved.

**661—205.5(100) Hospitals.**

**205.5(1)** *New hospitals.* NFPA 101, Life Safety Code, 2000 edition, Chapter 18, is adopted by reference as the fire safety rules for new hospitals.

**205.5(2)** *Existing hospitals.* NFPA 101, Life Safety Code, 2000 edition, Chapter 19, is adopted by reference as the fire safety rules for existing hospitals, with the following amendments:

Effective March 13, 2006, Section 19.3.6.3.2, Exception No. 2, is deleted.

Section 19.2.9 is not effective prior to March 13, 2006.

**205.5(3)** *Alcohol-based hand rub dispensers.* Notwithstanding any provisions of the 2000 edition of the Life Safety Code to the contrary, a hospital may install alcohol-based hand rub dispensers in its facility if:

*a.* Use of alcohol-based hand rub dispensers does not conflict with a local code that prohibits or otherwise restricts the placement of alcohol-based hand rub dispensers in health care facilities;

*b.* The dispensers are installed in a manner that minimizes leaks and spills that could lead to falls;

*c.* The dispensers are installed in a manner that adequately protects against access by vulnerable populations; and

*d.* The dispensers are installed in accordance with Section 18.3.2.7 or Section 19.3.2.7 of the 2000 edition of the Life Safety Code, as amended by NFPA Temporary Interim Amendment 00-1(101), issued by the Standards Council of the National Fire Protection Association on April 15, 2004.

**661—205.6** to **205.9** Reserved.

**661—205.10(100) Nursing facilities and hospices.**

**205.10(1)** *New nursing facilities and hospices.* NFPA 101, Life Safety Code, 2000 edition, Chapter 18, is adopted by reference as the fire safety rules for new nursing facilities and hospices that provide inpatient care directly.

**205.10(2)** *Existing nursing facilities and hospices.* NFPA 101, Life Safety Code, 2000 edition, Chapter 19, is adopted by reference as the fire safety rules for existing nursing facilities and hospices that provide inpatient care directly, with the following amendments:

Section 19.2.9 is not effective prior to March 13, 2006.

Effective March 13, 2006, Section 19.3.6.3.2, Exception No. 2, is deleted.

**205.10(3)** *Alcohol-based hand rub dispensers.* Notwithstanding any provisions of the 2000 edition of the Life Safety Code to the contrary, a hospice or nursing facility may place alcohol-based hand rub dispensers in its facility if:

*a.* Use of alcohol-based hand rub dispensers does not conflict with a local code that prohibits or otherwise restricts the placement of alcohol-based hand rub dispensers in health care facilities;

*b.* The dispensers are installed in a manner that minimizes leaks and spills that could lead to falls;

*c.* The dispensers are installed in a manner that adequately protects against access by vulnerable populations; and

*d.* The dispensers are installed in accordance with Section 18.3.2.7 or Section 19.3.2.7 of the 2000 edition of the Life Safety Code, as amended by NFPA Temporary Interim Amendment 00-1(101), issued by the Standards Council of the National Fire Protection Association on April 15, 2004.

**205.10(4)** *Smoke detectors in nursing facilities.* A nursing facility shall:

*a.* Install battery-operated smoke detectors in resident sleeping rooms and public areas by May 24, 2006.

*b.* Have a program for testing, maintenance, and battery replacement to ensure the reliability of the smoke detectors.

EXCEPTION: Battery-operated smoke detectors are not required in each resident sleeping room and public area if either the facility has a hard-wired AC smoke detection system in patient rooms and public areas that is installed, tested, and maintained in accordance with NFPA 72, National Fire Alarm Code, for hard-wired AC systems, or the facility has a sprinkler system throughout that is installed, tested, and maintained in accordance with NFPA 13, Automatic Sprinklers.

**661—205.11** to **205.14** Reserved.

**661—205.15(100) Intermediate care facilities for the mentally retarded and intermediate care facilities for persons with mental illness.**

**205.15(1)** *New intermediate care facilities.* New intermediate care facilities for the mentally retarded and new intermediate care facilities for persons with mental illness shall comply with the provisions of one of the following:

*a.* NFPA 101, Life Safety Code, 2000 edition, Chapter 18.

*b.* NFPA 101, Life Safety Code, 2000 edition, Chapter 32, with the following amendments:

NOTE: Any requirement contained within Chapter 32 that is based on a rating of evacuation capability shall be based upon an evacuation capability rating of "impractical." Any provision which is dependent upon an evacuation capability rating other than "impractical" shall be unavailable.

(1) Delete Section 32.2.1.2.1 and insert in lieu thereof the following new section:

32.2.1.2.1

Small facilities shall comply with the requirements of Section 32.2 as indicated for an evacuation capability of impractical.

Exception*: Facilities where the authority having jurisdiction has determined equivalent safety is provided in accordance with Section 1.5.

(2) Delete Section 32.2.1.2.2 and insert in lieu thereof the following new section:

32.2.1.2.2

The evacuation capability shall be classified as impractical.

(3) Delete Exception No. 1 to Section 32.2.2.1.

(4) Delete Exceptions No. 2 and No. 3 to Section 32.2.2.4.

(5) Delete the Exception to Section 32.2.3.3.2.

(6) Delete Exception No. 1 to Section 32.2.3.5.1.

(7) Delete Exceptions No. 1, No. 3 and No. 4 to Section 32.2.3.5.2.

(8) Delete Exception No. 2 to Section 32.2.3.5.2 and insert in lieu thereof the following new Exception No. 2:

EXCEPTION NO. 2: An automatic sprinkler system in accordance with NFPA 13D, Standard for the Installation of Sprinkler Systems in One- and Two-Family Dwellings and Manufactured Homes, with a 30-minute water supply, shall be permitted. All habitable areas and closets shall be sprinklered. Facilities with more than eight residents shall be treated as two-family dwellings with regard to water supply.

(9) Delete Exception No. 5 to Section 32.2.3.5.2 and insert in lieu thereof the following new Exception No. 5:

EXCEPTION NO. 5: In facilities up to and including four stories in height, systems in accordance with NFPA 13R, Standard for the Installation of Sprinkler Systems in Residential Occupancies up to and Including Four Stories in Height, shall be permitted. All habitable areas and closets shall be sprinklered.

(10) Delete Section 32.2.3.5.3.

(11) Delete Section 32.2.3.5.4 and insert in lieu thereof the following new section:

32.2.3.5.4

Automatic sprinkler systems shall be supervised in accordance with Section 9.7.

(12) Delete Exception No. 1 to Section 32.2.3.6.1.

(13) Delete Section 32.3.1.2.1.

(14) Delete Section 32.3.1.2.2 and insert in lieu thereof the following new section:

32.3.1.2.2

Large facilities shall meet the requirements for limited care facilities in Chapter 18.

Exception*: Facilities where the authority having jurisdiction has determined equivalent safety is provided in accordance with Section 1.5.

(15) Delete Section 32.3.1.2.3.

(16) Delete the Exception to Section 32.3.1.3.3, paragraph (a).

(17) Delete Section 32.4.1.4 and insert in lieu thereof the following new section:

32.4.1.4 Minimum Construction Requirements.

In addition to the requirements of Chapter 30, apartment buildings housing residential board and care facilities shall meet the construction requirements of 18.1.6. In applying the construction requirements, the height shall be determined by the height of the residential board and care facility measured above the primary level of exit discharge.

EXCEPTION: If the new board and care occupancy is created in an existing apartment building, the construction requirements of 19.1.6 shall apply.

(18) Delete Exception No. 2 to Section 32.7.3 and insert in lieu thereof the following new Exception No. 2:

EXCEPTION NO. 2: Those residents who cannot meaningfully assist in their own evacuation or who have special health problems shall not be required to actively participate in the drill. Section 18.7 shall apply in such instances.

**205.15(2)** *Existing intermediate care facilities.* Existing intermediate care facilities for the mentally retarded and existing intermediate care facilities for persons with mental illness shall comply with the provisions of one of the following:

*a.* NFPA 101, Life Safety Code, 2000 edition, Chapter 19.

*b.* NFPA 101, Life Safety Code, 2000 edition, Chapter 33, with the following amendments:

NOTE: Any requirement contained in Chapter 33 that is determined on a rating of evacuation capability shall be based upon an evacuation capability rating of "impractical." Any provision which depends upon an evacuation rating of "prompt" or "slow" shall be unavailable.

(1) Delete Section 33.1.7.

(2) Delete Section 33.2.1.2.1 and insert in lieu thereof the following new section:

33.2.1.2.1

Small facilities shall comply with the requirements of Section 33.2.

Exception*: Facilities where the authority having jurisdiction has determined equivalent safety is provided in accordance with Section 1.5.

(3) Delete Section 33.2.1.2.2 and insert in lieu thereof the following new section:

33.2.1.2.2

The evacuation capability shall be classified as impractical.

(4) Delete Section 33.2.1.3 and insert in lieu thereof the following new section:

33.2.1.3 Minimum Construction Requirements.

Buildings shall be of any construction type in accordance with 8.2.1 other than Type II(000), Type III(200), or Type V(000) construction.

EXCEPTION: Buildings protected throughout by an approved, supervised automatic sprinkler system in accordance with 33.2.3.5 shall be permitted to be of any type of construction.

(5) Delete Exception No. 1 to Section 33.2.2.1.

(6) Delete Section 33.2.2.2.2 and insert in lieu thereof the following new section:

33.2.2.2.2

The primary means of escape for each sleeping room shall not be exposed to living areas and kitchens.

EXCEPTION: Buildings equipped with quick-response or residential sprinklers throughout. Standard response sprinklers shall be permitted for use in hazardous areas in accordance with 33.2.3.2.

(7) Delete Exception No. 2, Exception No. 3, and Exception No. 4 to Section 33.2.2.4.

(8) Delete the Exception to Section 33.2.3.3.

(9) Delete Section 33.2.3.5.2 and insert in lieu thereof the following new section:

33.2.3.5.2*

Where an automatic sprinkler system is installed, for either total or partial building coverage, the system shall be in accordance with Section 9.7 and shall activate the fire alarm system in accordance with 33.2.3.4.1. The adequacy of the water supply shall be documented to the authority having jurisdiction.

EXCEPTION NO. 1: An automatic sprinkler system in accordance with NFPA 13D, Standard for the Installation of Sprinkler Systems in One- and Two-Family Dwellings and Manufactured Homes, with a 30-minute water supply, shall be permitted. All habitable areas and closets shall be sprinklered. Automatic sprinklers shall not be required in bathrooms not exceeding 55 $ft^2$ (5.1 $m^2$), provided that such spaces are finished with lath and plaster or materials providing a 15-minute thermal barrier.

EXCEPTION NO. 2: In facilities up to and including four stories in height, systems installed in accordance with NFPA 13R, Standard for the Installation of Sprinkler Systems in Residential Occupancies up to and Including Four Stories in Height, shall be permitted. All habitable areas and closets shall be sprinklered. Automatic sprinklers shall not be required in bathrooms not exceeding 55 $ft^2$ (5.1 $m^2$), provided that such spaces are finished with lath and plaster or materials providing a 15-minute thermal barrier.

EXCEPTION NO. 3: Initiation of the fire alarm system shall not be required for existing installations in accordance with 33.2.3.5.5.

(10) Delete Section 33.2.3.5.3 and insert in lieu thereof the following new section:

33.2.3.5.3

All facilities shall be protected throughout by an approved, supervised automatic sprinkler system in accordance with 33.2.3.5.2.

(11) Delete Exception No. 1 and Exception No. 4 to Section 33.2.3.6.1.

(12) Delete Section 33.3.1.1 and insert in lieu thereof the following new section:

33.3.1.1 Scope.

Section 33.3 applies to residential board and care occupancies providing sleeping accommodations for more than 16 residents. Facilities having sleeping accommodations for not more than 16 residents shall be evaluated in accordance with Section 33.2.

(13) Delete Section 33.3.1.2 and insert in lieu thereof the following new section:

33.3.1.2 Requirements.

Large facilities shall meet the requirements for limited care facilities in Chapter 19.

Exception*: Facilities where the authority having jurisdiction has determined equivalent safety is provided in accordance with Section 1.5.

(14) Delete the Exception to Section 33.3.1.3.3, paragraph (a).

(15) Delete Exception No. 2 to Section 33.3.3.6.1.

(16) Delete Exception No. 2 to Section 33.3.3.6.3.

(17) Delete Section 33.4.1.3 and insert in lieu thereof the following new section:

33.4.1.3 Requirements.

33.4.1.3.1

Apartment buildings housing board and care facilities shall comply with the requirements of Section 33.4.

Exception*: Facilities where the authority having jurisdiction has determined that equivalent safety for housing a residential board and care facility is provided in accordance with Section 1.5.

33.4.1.3.2

All facilities shall meet the requirements of Chapter 31 and the additional requirements of Section 33.4.

(18) Delete Section 33.4.1.4 and insert in lieu thereof the following new section:

33.4.1.4 Minimum Construction Requirements.

In addition to the requirements of Chapter 31, apartment buildings housing residential board and care facilities shall meet the construction requirements of 19.1.6. In applying the construction requirements, the height shall be determined by the height of the residential board and care facility measured above the primary level of exit discharge.

(19) Delete Exception No. 2 to Section 33.7.3 and insert in lieu thereof the following new exception:

EXCEPTION NO. 2: Those residents who cannot meaningfully assist in their own evacuation or who have special health problems shall not be required to actively participate in the drill. Section 19.7 shall apply in such instances.

**205.15(3)** *Alcohol-based hand rub dispensers.* Notwithstanding any provisions of the 2000 edition of the Life Safety Code to the contrary, a facility may install alcohol-based hand rub dispensers if:

*a.* Use of alcohol-based hand rub dispensers does not conflict with a local code that prohibits or otherwise restricts the placement of alcohol-based hand rub dispensers in health care facilities;

*b.* The dispensers are installed in a manner that minimizes leaks and spills that could lead to falls;

*c.* The dispensers are installed in a manner that adequately protects against access by vulnerable populations; and

*d.* The dispensers are installed in accordance with Section 18.3.2.7 or Section 19.3.2.7 of the 2000 edition of the Life Safety Code, as amended by NFPA Temporary Interim Amendment 00-1(101), issued by the Standards Council of the National Fire Protection Association on April 15, 2004.

**661—205.16** to **205.19** Reserved.

**661—205.20(100) Ambulatory health care facilities.**

**205.20(1)** *New ambulatory health care facilities.* NFPA 101, Life Safety Code, 2000 edition, Chapter 20, is adopted by reference as the fire safety rules for new ambulatory health care facilities.

**205.20(2)** *Existing ambulatory health care facilities.* NFPA 101, Life Safety Code, 2000 edition, Chapter 21, is adopted by reference as the fire safety rules for existing ambulatory health care facilities, with the following amendments:

Section 21.2.9.1 is not effective prior to March 13, 2006.

**205.20(3)** *Alcohol-based hand rub dispensers.* Notwithstanding any provisions of the 2000 edition of the Life Safety Code to the contrary, an ambulatory health care facility may place alcohol-based hand rub dispensers in its facility if:

*a.* Use of alcohol-based hand rub dispensers does not conflict with a local code that prohibits or otherwise restricts the placement of alcohol-based hand rub dispensers in health care facilities;

*b.* The dispensers are installed in a manner that minimizes leaks and spills that could lead to falls;

*c.* The dispensers are installed in a manner that adequately protects against access by vulnerable populations; and

*d.* The dispensers are installed in accordance with the following provisions:

(1) Where dispensers are installed in a corridor, the corridor shall have a minimum width of 6 ft (1.8 m);

(2) The maximum individual dispenser fluid capacity shall be:

1. 0.3 gallons (1.2 liters) for dispensers in rooms, corridors, and areas open to corridors;

2. 0.5 gallons (2.0 liters) for dispensers in suites of rooms;

(3) The dispensers shall have a minimum horizontal spacing of 4 ft (1.2 m) from each other;

(4) Not more than an aggregate 10 gallons (37.8 liters) of alcohol-based hand rub solution shall be in use in a single smoke compartment outside of a storage cabinet;

(5) Storage of quantities greater than 5 gallons (18.9 liters) in a single smoke compartment shall meet the requirements of NFPA 30, Flammable and Combustible Liquids Code;

(6) The dispensers shall not be installed over or directly adjacent to an ignition source; and

(7) In locations with carpeted floor coverings, dispensers installed directly over carpeted surfaces shall be permitted only in sprinklered smoke compartments.

**661—205.21** to **205.24** Reserved.

**661—205.25(100) Religious nonmedical health care institutions.**

**205.25(1)** *New religious nonmedical health care institutions.* NFPA 101, Life Safety Code, 2000 edition, Chapter 18, is adopted by reference as the fire safety rules for new religious nonmedical health care institutions.

**205.25(2)** *Existing religious nonmedical health care institutions.* NFPA 101, Life Safety Code, 2000 edition, Chapter 19, is adopted by reference as the fire safety rules for existing religious nonmedical health care institutions, with the following amendments:

Section 19.2.9 is not effective prior to March 13, 2006.

Effective March 13, 2006, Section 19.3.6.3.2, Exception No. 2, is deleted.

**205.25(3)** *Alcohol-based hand rub dispensers.* Notwithstanding any provisions of the 2000 edition of the Life Safety Code to the contrary, a religious nonmedical health care institution may place alcohol-based hand rub dispensers in its facility if:

*a.* Use of alcohol-based hand rub dispensers does not conflict with a local code that prohibits or otherwise restricts the placement of alcohol-based hand rub dispensers in health care facilities;

*b.* The dispensers are installed in a manner that minimizes leaks and spills that could lead to falls;

*c.* The dispensers are installed in a manner that adequately protects against access by vulnerable populations; and

*d.* The dispensers are installed in accordance with Section 18.3.2.7 or Section 19.3.2.7 of the 2000 edition of the Life Safety Code, as amended by NFPA Temporary Interim Amendment 00-1(101), issued by the Standards Council of the National Fire Protection Association on April 15, 2004.

These rules are intended to implement Iowa Code section 100.35 and chapters 135B, 135C, 135J and 231C and 42 CFR Parts 403, 416, 418, 482 and 483.

**661—205.26** to **205.99** Reserved.

**661—205.100(135C) Residential care facilities.**

**205.100(1)** *Definitions.* The following definitions apply to rule 661—205.100(135C):

*"Existing residential care facility"* means a residential care facility which has been in continuous operation since before April 1, 2004.

*"New residential care facility"* means a residential care facility which begins operation on or after April 1, 2004.

*"NFPA"* means the National Fire Protection Association, Batterymarch Park, Quincy, MA 02269. References to the form "NFPA xx," where "xx" is a number, refer to the NFPA standard or pamphlet of the corresponding number.

*"Residential care facility"* means a facility that is licensed or seeking licensure by the department of inspections and appeals as a residential care facility pursuant to the provisions of Iowa Code section 135C.6, or has been identified by the department of inspections and appeals as a facility that requires licensure as a residential care facility pursuant to Iowa Code section 135C.6.

**205.100(2)** *New residential care facilities.* NFPA 101, Life Safety Code, 2003 edition, Chapter 18, "New Health Care Facilities," is adopted by reference as the rules governing new residential care facilities. For purposes of this subrule, a residential care facility is a "limited care facility" as defined in NFPA 101, Life Safety Code, 2003 edition, Section 3.3.69.2.

**205.100(3)** *Existing residential care facilities.* NFPA 101, Life Safety Code, 2003 edition, Chapter 19, "Existing Health Care Facilities," is adopted by reference as the rules governing existing residential care facilities. For purposes of this subrule, a residential care facility is a "limited care facility" as defined in NFPA 101, Life Safety Code, 2003 edition, Section 3.3.69.2.

EXCEPTION: Existing residential care facilities which were approved by the fire marshal on or before March 11, 2003, pursuant to rules 661—5.550(100) to 5.552(100) and which have been in continuous operation since on or before March 11, 2003, may continue to operate in compliance with rules 661—5.550(100) to 5.552(100) as those rules existed on March 10, 2003.

NOTE: Rules 661—5.550(100) to 5.552(100) were rescinded effective March 11, 2003.

This rule is intended to implement Iowa Code sections 100.35 and 135C.9.

[Filed 9/17/57; amended 10/9/57, 1/5/60]
[Filed 10/12/71; amended 12/31/73]
[Filed 4/4/77, Notice 9/22/76—published 4/20/77, effective 5/25/77]
[Filed 10/10/86, Notice 11/5/86—published 12/31/86, effective 2/4/87]
[Filed 4/1/88, Notice 9/23/87—published 4/20/88, effective 5/25/88]
[Filed 2/2/89, Notice 12/28/88—published 2/22/89, effective 3/29/89]
[Filed 3/16/90, Notice 12/13/89—published 4/4/90, effective 5/9/90]
[Filed 4/24/92, Notice 2/19/92—published 5/13/92, effective 7/1/92]
[Filed 2/24/93, Notice 12/9/92—published 3/17/93, effective 5/1/93]
[Filed emergency 3/10/03—published 4/2/03, effective 3/11/03]
[Filed 10/7/03, Notice 5/28/03—published 10/29/03, effective 1/1/04]
[Filed emergency 3/25/04 after Notice 2/18/04—published 4/14/04, effective 4/1/04]
[Filed emergency 5/23/05 after Notice 4/27/05—published 6/22/05, effective 5/24/05]

CHAPTERS 206 to 209
Reserved

# CHAPTER 210
# SMOKE DETECTORS

**661—210.1(100) Definition.** The following definition applies to rules 661—210.1(100) through 661—210.4(100):

*"Approved"* means acceptable to the state fire marshal. Any equipment, device or procedure which bears the stamp of approval or meets applicable standards prescribed by an organization of national reputation such as the Underwriters Laboratories, Inc., National Bureau of Standards, Factory Mutual Laboratories, American Society for National Fire Protection Association, American Society of Mechanical Engineers or American Standards Association, which undertakes to test and approve or provide standards for equipment, devices or procedures of the nature prescribed in this chapter, shall be deemed acceptable to the state fire marshal.

**661—210.2(100) General requirements.**

**210.2(1)** Approved single station smoke detectors shall be acceptable in all areas covered by this chapter, unless other fire warning equipment or materials are required by any provision of 661—Chapter 201, 202, or 205.

**210.2(2)** Any installation of wiring and equipment shall comply with NFPA 70, National Electrical Code, 2005 edition, and requirements established by the manufacturer of the equipment serviced by the wiring.

**210.2(3)** All devices, combinations of devices, and equipment to be installed in conformity with this chapter shall be approved and used for the purposes for which they are intended.

**210.2(4)** A combination system, such as a household fire warning system whose components may be used in whole or in part, in common with a nonfire emergency signaling system, such as a burglar alarm system or an intercom system, shall not be permitted or approved, except for one- or two-family dwellings.

**210.2(5)** All power supplies shall be sufficient to operate the smoke detector alarm for at least four continuous minutes.

**210.2(6)** Power source.

*a.* In new buildings and additions constructed after July 1, 1991, required smoke detectors shall receive their primary power from the building wiring when such wiring is served from a commercial source. Wiring shall be permanent and without a disconnecting switch other than that required for overcurrent protection. Smoke detectors may be solely battery operated when installed in existing buildings, or in buildings without commercial power, or in buildings which undergo alterations, repairs or additions subject to subrule 210.2(2).

*b.* New and replacement smoke detectors installed after May 1, 1993, which receive their primary power from the building wiring shall be equipped with a battery backup.

**210.2(7)** The failure of any nonreliable or short-life component which renders the detector inoperative shall be readily apparent to the occupant of the sleeping unit without the need for a test. Each smoke detector shall detect abnormal quantities of smoke that may occur and shall properly operate in the normal environmental condition.

**210.2(8)** Equipment shall be installed, located and spaced in accordance with the manufacturer's recommendations.

**210.2(9)** Installed fire warning equipment shall be mounted so as to be supported independently of its attachment to wires.

**210.2(10)** All apparatus shall be restored to normal immediately after each alarm or test.

**210.2(11)** Location within dwelling units.

*a.* In dwelling units, detectors shall be mounted on the ceiling or wall at a point centrally located in the corridor or area giving access to each separate sleeping area. When the dwelling unit has more than one story and in dwellings with basements, a detector shall be installed on each story and in the basement. In dwelling units where a story or basement is split into two or more levels, the smoke detector shall be installed on the upper level, except that when the lower level contains a sleeping area, a detector shall be

installed on each level. When sleeping rooms are on an upper level, the detector shall be placed at the ceiling of the upper level in close proximity to the stairway. In dwelling units where the ceiling height of a room open to the hallway serving the bedrooms exceeds that of the hallway by 24 inches or more, smoke detectors shall be installed in the hallway and in the adjacent room. Detectors shall sound an alarm audible in all sleeping areas of the dwelling unit in which they are located.

*b.* Location in efficiency dwelling units and hotels. In efficiency dwelling units, in hotel suites and in hotel sleeping rooms, detectors shall be located on the ceiling or wall of the main room or hotel sleeping room. When sleeping rooms within an efficiency dwelling unit or hotel suite are on an upper level, the detector shall be placed at the ceiling of the upper level in close proximity to the stairway. When actuated, the detector shall sound an alarm audible within the sleeping area of the dwelling unit, hotel suite or sleeping room in which it is located.

**661—210.3(100) Smoke detectors—notice and certification of installation.**

**210.3(1)** *Notice of installation.* An owner of a rental residential building containing two or more units, who is required by law to install smoke detectors, shall notify the local fire department upon installation of required smoke detectors.

**210.3(2)** *Certification—single-family dwelling units.* A person who files for a homestead tax credit pursuant to Iowa Code chapter 425 shall certify that the single-family dwelling unit for which the credit is filed has a smoke detector(s) installed in accordance with subrule 210.2(6) and paragraph 210.2(11)*"a,"* or that such smoke detector(s) will be installed within 30 days of the date of filing for credit.

**210.3(3)** *Reports to fire marshal.* Each county or city assessor charged with the responsibility of accepting homestead tax credit applications shall obtain certification of smoke detection on a form acceptable to the state fire marshal, signed by the person making application for credit, and shall file a quarterly report with the fire marshal listing the name and address and stating whether applicant attested to a detector(s) being present at the time of application or that a detector(s) would be installed as required within 30 days.

**661—210.4(100) Smoke detectors—new and existing construction.**

**210.4(1)** *New construction.* All multiple-unit residential buildings and single-family dwellings which are constructed after July 1, 1991, shall include the installation of smoke detectors meeting the requirements of rule 661—210.1(100) and rule 661—210.2(100).

**210.4(2)** *Existing construction.* All existing single-family units and multiple-unit residential buildings shall be equipped with smoke detectors as required in paragraph 210.2(11)*"a."*

These rules are intended to implement Iowa Code section 100.18.

[Filed 11/2/06, Notice 9/13/06—published 11/22/06, effective 1/1/07]

CHAPTERS 211 to 220
Reserved

# CHAPTER 221
# FLAMMABLE AND COMBUSTIBLE LIQUIDS

**661—221.1(101) Scope.** This chapter provides the rules of the fire marshal for safe transportation, storage, handling, and use of flammable and combustible liquids. IFC, 2006 edition, sections 102.1 and 102.2, is adopted by reference.

**661—221.2(101) Definitions.** The following definitions shall apply to rules 661—221.1(101) through 661—221.8(101). These definitions are adopted in addition to those which appear in the International Fire Code, 2006 edition; NFPA 30, Flammable and Combustible Liquids Code, 2003 edition; and NFPA 30A, Code for Motor Fuel Dispensing and Repair Garages, 2003 edition. If a definition adopted in this rule conflicts with a definition included in a code or standard adopted by reference in this chapter, the definition found in this rule shall apply.

*"Fire code official"* means any employee of the fire marshal division of the department of public safety, of any local fire department, or of the department of natural resources if the employee is operating under an agreement between the department of public safety and the department of natural resources.

*"ICC"* means the International Code Council, 5203 Leesburg Pike, Suite 600, Falls Church, VA 22041.

*"IFC"* means the International Fire Code, published by the ICC. "IFC" will be followed by a year (e.g., IFC, 2006), which indicates the specific edition of the IFC to which reference is made.

*"Mobile air-conditioning system"* means mechanical vapor compression equipment which is used to cool the driver or passenger compartment of any motor vehicle.

*"NFPA"* means the National Fire Protection Association, Batterymarch Park, Quincy, MA 02269. References to the form "NFPA xx," where "xx" is a number, refer to the NFPA standard or pamphlet of the corresponding number.

*"SPCC plan"* means a spill prevention, control and countermeasure plan, as defined in 40 CFR 112, published January 1, 2007.

*"Under dispenser containment"* or *"UDC"* means containment underneath a dispenser that will prevent leaks from the dispenser from reaching soil or groundwater.

**661—221.3(101) Flammable and combustible liquids.** The International Fire Code, 2006 edition, published by the ICC, Chapter 34 and references contained therein, and NFPA 30, Flammable and Combustible Liquids Code, 2003 edition and references contained therein, are adopted by reference as the rules for transportation, storage, handling, and use of flammable and combustible liquids. In any case in which a provision of the IFC conflicts with a provision of NFPA 30, the IFC provision shall apply. Any refinery shall comply with the provisions of this rule and with any applicable provisions of 661—Chapter 201.

**221.3(1)** The IFC, 2006 edition, is adopted with the following amendments:

*a.* In section 3402.1, amend the following definitions:

(1) Delete the definition of combustible liquid and insert in lieu thereof the following:

COMBUSTIBLE LIQUID. A liquid having a closed cup flash point at or above 100°F (38°C) and below 200°F (93°C). Combustible liquids shall be subdivided as follows:

Class II. Liquids having a closed cup flash point at or above 100°F (38°C) and below 140°F (60°C).

Class IIIA. Liquids having a closed cup flash point at or above 140°F (60°C) and below 200°F (93°C).

The category of combustible liquids does not include compressed gases or cryogenic fluids.

(2) Delete the definition of refinery and insert in lieu thereof the following:

REFINERY. A plant in which flammable or combustible liquids are produced on a commercial scale from crude petroleum, natural gasoline or other sources, or in which flammable or combustible liquids are used to produce on a commercial scale fuels intended for use in motor vehicles, whether or not those fuels are flammable or combustible liquids.

*b.* Delete section 3403.1 and insert in lieu thereof the following:

3403.1 Electrical. Electrical wiring and equipment shall be installed and maintained in accordance with NFPA 70, National Electrical Code, 2005 edition, published by NFPA.

*c.* Add the following new sections:

3403.6.12 Each connection to an aboveground tank through which liquid can normally flow shall be provided with an external control valve that is located as close as practical to the shell of the tank. In addition to the control valve or any other normal tank valves, there shall be an emergency internal check valve at each pipe connection to any tank opening below normal liquid level. The emergency internal check valve shall be effectively located inside the tank shell and shall be operable both manually and by an effective heat-activated device that, in case of fire, will automatically close the valve to prevent the flow of liquid from the tank even though the pipelines from the tank are broken.

3403.6.13 Any new or replacement piping connected to an aboveground storage tank shall be double-walled unless it lies entirely within the area of secondary containment.

3403.6.14 Any device dispensing Class I or Class II flammable liquids shall not be constructed or installed less than 100 feet from any existing dwelling unit.

*d.* Delete section 3404.2.8.12 and insert in lieu thereof the following:

3404.2.8.12 Liquid removal. Means shall be provided to recover liquid from the vault. Where a pump is used to meet this requirement, the pump shall not be permanently installed in the vault. Electric-powered portable pumps shall be suitable for use in Class I, Division 1 locations, as defined in NFPA 70, National Electrical Code, 2005 edition.

*e.* Delete section 3404.2.8.17 and insert in lieu thereof the following:

3404.2.8.17 Classified area. The interior of a vault containing a tank that stores a Class I liquid shall be designated a Class I, Division 1 location, as defined in NFPA 70, National Electrical Code, 2005 edition.

*f.* Delete section 3404.2.9.1.1, introductory paragraph, and insert in lieu thereof the following:

3404.2.9.1.1 Required foam fire protection systems. Foam fire protection shall be provided at any refinery and for aboveground tanks, other than pressure tanks operating at or above 1 pound per square inch gauge (psig) (6.89 kPa) when such tank, or group of tanks spaced less than 50 feet (15,240 mm) apart measured shell to shell, has a liquid surface area in excess of 1,500 square feet (139 $m^2$), and is in accordance with any of the following:

*g.* Delete section 3404.2.9.1.2.1, introductory paragraph, and insert in lieu thereof the following:

3404.2.9.1.2.1 Where foam fire protection is required, it shall be provided in accordance with NFPA 11, 2005 edition, and shall be of a type or types and amount appropriate to suppress fires involving types and amounts of flammable and combustible liquids found on the premises. Where the flammable or combustible liquid contains more than 10 percent alcohol, the foam shall be alcohol-resistant. Fire-fighting foam shall be stored separately from any area in which flammable and combustible liquids are stored and in an area or areas that will be readily accessible to fire fighters responding to a fire at the facility.

*h.* Amend the exception to section 3404.2.9.1.2.1 by adding the following new numbered paragraphs:

6. The premises is not a refinery.

7. The premises does not include bulk storage of flammable or combustible liquids.

8. The premises does not contain total storage capacity to store one million gallons or more of flammable or combustible liquids.

**221.3(2)** Amend NFPA 30, section 4.3.2.3.3, by adding the following new paragraphs:

(10) Each secondary containment tank shall have top-only openings and shall be either a steel double-walled tank or a steel inner tank with an outer containment tank wall constructed in accordance with nationally accepted industry standards, such as those codified by the American Petroleum Institute, the Steel Tank Institute and the American Concrete Institute. Each tank shall be listed by an independent testing laboratory.

(11) Each fill opening in a secondary containment tank shall be provided with a spill container that will hold at least 5 gallons.

(12) For any secondary containment tank, interstitial tank space shall be monitored by an approved, continuous, automatic detection system that is capable of detecting liquids, including water. An automatic detection system may be either electronically or mechanically operated.

**221.3(3)** Plans and plan review fees.

*a.* The owner of any premises on which flammable or combustible liquids are or will be stored or used is required to submit construction plans to the fire marshal division, prior to commencing initial construction of the facility or prior to commencing any construction at an existing facility which includes the addition or replacement of an aboveground flammable or combustible liquid storage tank. The construction plans shall be sealed by a licensed professional engineer if the facility at which the construction will occur is or will be a refinery or if preparation of the plans by a licensed professional engineer is required by another provision of Iowa law.

Construction for which plans are required to be submitted for review shall not commence until approval of the plan has been received from the fire marshal.

EXCEPTION 1: Submission of construction plans is not required if the total flammable and combustible liquid storage capacity on the premises is or will be 1,100 gallons or less.

EXCEPTION 2: If an SPCC plan has been prepared pursuant to 40 CFR 112 for a facility other than a refinery, a copy of the SPCC plan may be submitted to the fire marshal in lieu of submission of separate construction plans, provided that the SPCC plan includes all of the elements required to be included in construction plans for the specific facility in this subrule. If the fire marshal agrees, copies of portions of the SPCC plan may be submitted in lieu of a copy of the complete plan provided that all elements of construction plans which are required for the specific facility by this subrule are included. If an SPCC plan or portions thereof are submitted to the fire marshal, the person making the submission shall provide any additional information required by the fire marshal to evaluate compliance with the provisions of this chapter and Iowa Code chapter 101. The copy of the SPCC plan or portions thereof submitted to the fire marshal shall clearly identify the licensed professional engineer who prepared the plan or shall be accompanied by a letter making this identification.

*b.* Minimum requirements for plans submitted for review include the following:

(1) Drawings shall show the name of the person, firm or corporation proposing the installation, the location, and the adjacent streets or highways.

(2) In the case of refineries or bulk plants, the drawings shall show, in addition to any applicable features required under subparagraphs (4) and (5), the plot of ground to be utilized and its immediate surroundings on all sides; and a complete layout of buildings, tanks, loading and unloading docks, and heating devices, if any.

(3) In the case of service stations, the drawings shall show, in addition to any applicable features required under subparagraphs (4), (5), and (6), the plot of ground to be utilized; the complete layout of buildings, drives, dispensing equipment, and greasing or washing stalls; and the type and location of any heating device.

(4) In the case of aboveground storage, the drawings shall show the location and capacity of each tank; dimensions of each tank whose capacity exceeds 50,000 gallons; the class of liquid to be stored in each tank; the type of tank supports; the clearances; the type of venting and pressure relief relied upon and the combined capacity of all venting and pressure relief valves on each tank; and the tank control valves and the location of pumps and other facilities by which liquid is filled into or withdrawn from the tanks.

(5) In the case of underground storage, the drawings shall show the location and capacity of each tank; the class of liquids to be stored; and the location of fill, gauge, vent pipes, openings and clearances.

(6) In the case of an installation for storage, handling or use of flammable or combustible liquids within buildings or enclosures at any establishment or occupancy covered in this chapter, the drawing shall be in detail sufficient to show whether applicable requirements are to be met.

*c.* Fees for plan reviews shall apply as follows:

(1) $100 plus $25 for each new or replacement tank included in the plan, for any site or facility at which flammable or combustible liquids are or will be stored, except for new construction of a refinery.

(2) $500 for review of the initial construction plans of a refinery if the projected construction costs are $100,000,000 or less and $1,000 for the initial construction plans for a refinery if the projected construction costs are greater than $100,000,000.

(3) The owner shall submit payment of plan review fees in the form of a check, money order, or warrant payable to Treasurer, State of Iowa.

*d.* Plan review fees shall be refunded to the submitter if the plan review has not been completed and the submitter has not been notified of approval or disapproval of the plans within 60 days of receipt of the complete plans by the fire marshal division.

**221.3(4)** Inspections.

*a.* Any facility at which flammable or combustible liquids are stored is subject to inspection by any fire code official during the regular business hours of the facility. If the facility does not operate under regular business hours, a fire official shall have access to the facility between 8 a.m. and 4 p.m. on any day which is a business day for the state of Iowa, within four hours of notifying the owner of intent to inspect the facility.

*b.* Any inspection of a facility pursuant to this subrule conducted by an employee of the fire marshal division of the department of public safety shall result in an inspection fee of $100 plus $25 for each aboveground flammable or combustible liquid storage tank, except that there shall be no fee for an initial inspection or the first reinspection after an initial inspection that is conducted pursuant to the receipt of a complaint alleging that the facility is in violation of any provision of this chapter, 661—Chapter 224 or Iowa Code chapter 101.

*c.* Inspections may be initiated by the inspecting official at random or on any other basis; may be conducted at the request of the owner, operator, or manager of a facility; or may be conducted to investigate allegations made in a complaint. Such a complaint shall be in writing and shall specify the location and nature of the alleged violations. The complainant may or may not be identified. Complainants who identify themselves may request to be notified of the outcome of the inspection conducted in response to the complaint.

**661—221.4(101) Motor fuel dispensing facilities and repair garages.** The International Fire Code, 2006 edition, published by the ICC, Chapter 22 and references contained therein, and NFPA 30A, Code for Motor Fuel Dispensing Facilities and Repair Garages, 2003 edition and references contained therein, are adopted by reference as the rules for motor fuel dispensing facilities and repair garages. If any provision of the International Fire Code adopted herein is in conflict with any provision of NFPA 30A, the International Fire Code provision shall apply. The International Fire Code, 2006 edition, Chapter 22, is adopted with the following amendments:

**221.4(1)** Amend Table 2206.2.3 so that:

Each tank with a capacity of not more than 6,000 gallons for motor vehicle fuel dispensing systems and storing a Class I liquid, or with a capacity of not more than 12,000 gallons and storing a Class II or Class III liquid, that is located at a commercial, industrial, governmental, or manufacturing establishment, and that is intended for fueling vehicles used in connection with the establishment, is required to be located at least:

(a) 40 feet away from the nearest important building on the same property;

EXCEPTION: Tanks may be located closer than 40 feet to a building of noncombustible construction.

(b) 40 feet away from any property that is or may be built upon, including the opposite side of a public way;

EXCEPTION: No minimum separation shall be required for any tank that complies with NFPA 30A, section 4.3.2.6.

(c) 100 feet away from any residence or place of assembly.

**221.4(2)** Add the following new section:

2206.7.1.1 Dispensing of E-blend.

2206.7.1.1.1 Definitions.

*"E-10"* means a blend of petroleum and ethanol including no more than 15 percent ethanol intended for use as a motor vehicle fuel.

*"E-blend"* means a blend of petroleum and ethanol including more than 15 percent ethanol intended for use as a motor vehicle fuel.

2206.7.1.1.2 E-blend may only be dispensed if both of the following apply:

(a) Only a dispenser listed by an independent testing laboratory as compatible with ethanol blended gasoline shall be used to dispense E-blend.

(b) The owner or operator or a person authorized by the owner or operator shall visually inspect the dispenser and the dispenser sump daily for leaks and equipment failure and maintain a record of such inspection for at least one year after the inspection. The record shall be located on the premises of the retail dealer and shall be made available to the department of natural resources or the state fire marshal upon request. If a leak is detected, the department of natural resources shall be notified pursuant to Iowa Code section 455B.386.

**221.4(3)** Add the following new section:

2206.7.10 Under dispenser containment (UDC). When installing a new motor fuel dispenser or replacing a motor fuel dispenser, UDC shall be installed whenever any of the following occurs:

(1) UDC is required by a rule adopted by the environmental protection commission.

NOTE: See 567—subrule 135.3(9), paragraph *"h."*

(2) A motor fuel dispenser is installed at a location where there previously was no dispenser; or

(3) An existing motor fuel dispenser is removed and replaced with another dispenser. UDC is not required when only the emergency shutoff, shear valves or check valves are replaced.

UDC shall:

- Be intact and liquid tight on its sides and bottom and at any penetrations;
- Be compatible with the substance conveyed by the piping; and
- Allow for visual inspection and monitoring and access to the components in the containment system.

EXCEPTION: UDC shall not be required for a dispenser which sits directly upon a solid concrete apron.

**221.4(4)** Temporary storage in disaster emergencies. Notwithstanding any provision to the contrary found in this chapter or found in the International Fire Code or NFPA 30A as adopted by reference herein, aboveground petroleum storage tanks may be used to store flammable and combustible liquids in motor fuel dispensing operations, provided that all of the following apply:

*a.* The facility is in an area covered by a disaster emergency proclamation issued by the governor pursuant to Iowa Code section 29C.6 or, if not in such an area, the facility has applied to the fire marshal and has been approved for storage of flammable and combustible liquids in compliance with this subrule.

*b.* The facility has suffered damage which has rendered the storage tanks normally used by the facility for flammable and combustible liquids inoperable. Storage of flammable and combustible liquids in compliance with this subrule shall continue only for as long as the normal storage tanks are inoperable and in no event for more than 90 days.

EXCEPTION: In extraordinary circumstances, storage of flammable and combustible liquids in compliance with this subrule may continue for more than 90 days if the facility has sought and received specific written approval from the fire marshal for such storage.

*c.* The facility has written confirmation from the facility's insurance provider that insurance coverage will apply while storage of flammable and combustible liquids in compliance with this subrule is occurring.

*d.* Any aboveground petroleum storage tank used pursuant to this subrule shall be rated or listed by an independent testing laboratory for aboveground storage of flammable and combustible liquids.

*e.* Any aboveground petroleum storage tank used pursuant to this subrule shall be of no more than 1,000 gallons capacity.

EXCEPTION: A storage tank larger than 1,000 gallons capacity may be used pursuant to this subrule if the facility has received specific written approval from the fire marshal for its use. In reviewing such a request, the fire marshal shall consider, but is not limited to considering, the following factors:

(1) Volume of throughput of the facility.

(2) Ability to meet setback requirements appropriate to the size of the tanks used.

*f.* All electrical service proximate to the storage area shall comply with applicable provisions of NFPA 70, National Electrical Code, 2005 edition. An emergency shutoff control or electrical disconnect shall be installed no less than 20 feet nor more than 100 feet from any fuel-dispensing device at the facility. The control shall be clearly marked "Emergency Shutoff."

*g.* A 20-pound fire extinguisher with a minimum B:C rating of 40 shall be located no more than 50 feet from the location of any storage tank being used in compliance with this subrule.

*h.* Precautions shall be taken to prevent the ignition of flammable or combustible liquids, including the conspicuous posting of warning signs saying "NO SMOKING" and "NO OPEN FLAME."

*i.* Aboveground petroleum storage tanks used pursuant to this subrule shall be plumbed into existing dispensers, if practical. If this is impractical, all fueling at the facility shall be by attendant only; no self-service dispensing shall be allowed at the facility.

*j.* Any aboveground petroleum storage tank used in compliance with this subrule shall be located so as to be protected from prospective damage from vehicle collisions and shall be located with due regard to vehicular traffic patterns and the location of property lines and significant buildings, particularly those which are frequently occupied by humans.

**661—221.5(101) Aircraft fueling.** The International Fire Code, 2006 edition, published by the ICC, sections 1106 through 1106.21.1 and references contained therein, and NFPA 407, Standard for Aircraft Fuel Servicing, 2007 edition and references contained therein, are adopted by reference as the rules for aircraft fueling facilities. If any provision of the IFC adopted herein conflicts with any provision of NFPA 407, 2007 edition, the IFC provision shall apply.

**661—221.6(101) Helicopter fueling.** The International Fire Code, 2006 edition, published by the ICC, sections 1107 through 1107.8 and references contained therein, is adopted by reference as the rules for helicopter fueling facilities.

**661—221.7(101) Fuel-fired appliances.** The International Fire Code, 2006 edition, published by the ICC, sections 603 through 603.9 and references contained therein, is adopted by reference as the rules for fuel-fired appliances, except for LP-gas fired appliances, which are subject to the provisions of 661—Chapter 226.

**661—221.8(101) Stationary combustion engines and gas turbines.** The International Fire Code, 2006 edition, Chapter 6 and references contained therein, and NFPA 37, "Standard for the Installation and Use of Stationary Combustion Engines and Gas Turbines," 2006 edition, are adopted by reference as the rules governing the installation and use of stationary combustion engines and gas turbines. If any provision of the IFC, 2006 edition, Chapter 6, adopted herein is in conflict with any provision of NFPA 37, 2006 edition, the provision of the IFC shall apply.

These rules are intended to implement Iowa Code chapter 101.

[Filed 11/1/07, Notice 9/26/07—published 11/21/07, effective 1/1/08]
[Filed emergency 6/25/08—published 7/16/08, effective 7/1/08]

CHAPTERS 222 and 223
Reserved

# CHAPTER 224
# ABOVEGROUND PETROLEUM STORAGE TANKS

**661—224.1(101) Scope.** These rules apply to aboveground petroleum storage tanks, as defined in Iowa Code section 101.21.

**661—224.2(101) Definition.** The following definition applies to the rules in this chapter:

*"Aboveground petroleum storage tank"* means one or a combination of tanks, including connecting pipes connected to the tanks which are used to contain an accumulation of petroleum and the volume of which, including the volume of the underground pipes, is more than 90 percent above the surface of the ground. Aboveground petroleum storage tank does not include any of the following:

1. Aboveground tanks of 1100 gallons or less capacity.
2. Tanks used for storing heating oil for consumptive use on the premises where stored.
3. Underground storage tanks as defined by Iowa Code section 455B.471.
4. A flow-through process tank, or a tank containing a regulated substance, other than motor fuel used for transportation purposes, for use as part of a manufacturing process, system, or facility.

**661—224.3(101) Compliance.** Any tank subject to the provisions of this chapter shall be in compliance with this chapter, all applicable provisions of 661—Chapter 221, and Iowa Code chapter 101 at all times.

**661—224.4(101) Registration of existing and new tanks—fees.** All existing, new, replacement and out-of-service aboveground tanks of 1101-gallon capacity or greater shall be registered with the state fire marshal. This requirement applies to aboveground tanks used to store petroleum, as defined in Iowa Code section 455B.471, which includes crude oil, heating oil offered for resale, motor fuels and oils such as gasoline, diesel fuels and motor oil. Tanks which are used, or planned for use, to store blended fuels which include either gasoline or diesel are subject to this requirement.

**224.4(1)** *Registration form.* Registration forms for aboveground storage tanks may be obtained from the fire marshal division. A completed registration form shall be submitted to the fire marshal division by the date on which it is due and shall be accompanied by the applicable fee, including any applicable late charges.

**224.4(2)** *Fees.* The annual registration fee for each tank shall be $10. The fee shall cover registration for each tank for one year, which ends on October 1. If a tank is registered on or after October 1 of any year, payment of the fee shall cover registration until the following October 1.

**224.4(3)** *Registration deadline.* Each tank shall be registered annually by October 1 of each year.

EXCEPTION: A tank may be registered for the first time on any date without penalty, provided that it has not previously been in use to store petroleum products. A tank that is registered for the first time shall not be used to store petroleum products until the registration has been completed and the registration tag has been attached to the tank.

**224.4(4)** *Late fees.* A late fee of $25 per tank shall be imposed for failure to register a tank prior to October 31 each year. The fee shall apply individually to each tank for which registration was not completed prior to October 31.

**661—224.5(101) Approval of plans.** A registration tag for a new aboveground storage tank shall not be issued prior to approval by the state fire marshal of plans for the installation of the tank and payment of the required plan review fee. The state fire marshal may require inspection of the tank and payment of an inspection fee prior to use of the tank.

**661—224.6(101) Inspections and orders.**

**224.6(1)** *Inspections.* Any tank is subject to inspection at any time by the state fire marshal, an employee of the state fire marshal, a local fire chief, or any member of the local fire department designated by the local fire chief. Any of the persons listed who seeks to inspect a tank pursuant to this rule shall, upon request, be allowed access to any facility in which a tank or tanks are located. At any time such a facility is attended, the attendant shall allow immediate access to the facility to the person who requests

access to the facility in order to conduct an inspection. If a facility is unattended, the person who seeks to conduct the inspection shall notify the owner or operator of the facility. During regular business hours, or between 8 a.m. and 4 p.m. Monday through Friday, access shall be allowed within one hour of notification. If access is sought other than during regular business hours, access shall be provided at 8 a.m. on the next weekday other than a holiday. If the person who seeks access to the facility indicates that access is being sought to investigate an emergency or potential emergency, the owner of the facility shall provide access within one hour of receiving the request, regardless of the time of day or day of the week when the request is received.

**224.6(2)** *Orders.* If the person who conducts an inspection pursuant to subrule 224.6(1) finds that a tank is in violation of any applicable provision of this chapter, 661—Chapter 221, or Iowa Code chapter 101, the person may issue an order for correction. The order shall specify the violation or violations, corrective actions to be taken, and the time allowed for completion of the corrective actions.

**224.6(3)** *Suspension of use.* If any corrective action ordered pursuant to subrule 224.6(2) is not completed in the time specified in the order issued pursuant to subrule 224.6(2), the state fire marshal may order that the tank be placed out of service until the corrective action or actions have been completed. If a tank is ordered to be placed out of service pursuant to this subrule, the tank shall have a sticker prominently affixed to it which states that the tank is out of service by order of the state fire marshal and that it is a violation of law to transfer any petroleum product into the tank.

**224.6(4)** *Emergency order.* If the fire marshal finds that a violation identified during an inspection conducted pursuant to subrule 224.6(1) creates an imminent threat to public safety or public health, or if the fire marshal finds, after consultation with the department of natural resources, that such a violation creates an imminent threat of environmental damage, the fire marshal shall order that the tank be placed out of service immediately and may order that the tank be evacuated of liquid and purged of vapors. If a tank is ordered to be placed out of service pursuant to this subrule, the tank shall have a sticker prominently affixed to it which states that the tank is out of service by order of the state fire marshal and that it is a violation of law to transfer any petroleum product into the tank.

**224.6(5)** *Notice.* Notice of any order issued pursuant to this rule shall be given to the owner or operator of a tank subject to the order. Notice of an emergency order issued pursuant to subrule 224.6(4) shall be given by personal service. Notice of any other order issued pursuant to this rule may be given by regular mail or personal service.

EXCEPTION: If the owner of a tank subject to an order issued pursuant to this rule is unknown or cannot be located, notice shall be considered to have been given if the notice is served personally to any person at the location of the tank or, if no person is present, by affixing the notice to the tank. Alternatively, notice may be given by mailing the notice to the address at which the tank is located, with a return receipt requested. Notification from the United States Postal Service that delivery was attempted unsuccessfully or that delivery was refused shall serve as proof that notice was given.

**661—224.7(101) Leaks, spills, or damage.** Any leak from, spill from, or damage to a storage tank shall be reported to the local fire department and, if required by law, to the department of natural resources. If a tank is leaking or has been damaged, it shall be placed out of service until the leak has been repaired. A sign shall be placed prominently on the tank stating that the tank is out of service and that no petroleum product shall be placed into the tank until required repairs have been completed.

**661—224.8(101) Civil penalty.** The fire marshal may impose a civil penalty upon the owner of a storage tank for any of the following:

1. Failure to register a storage tank currently being used to store a petroleum product if the registration is more than 30 days late.

2. Allowing any petroleum product to be placed into a tank which has been ordered to be placed out of service and for which the order has not been rescinded or allowing any petroleum product to be placed into any tank which has been damaged or is leaking, if the damage or leak has not been repaired.

A civil penalty issued pursuant to this rule and to Iowa Code section 101.26 shall not exceed $100 for each day during which the violation occurs or $1000 in total.

**661—224.9(17A,101) Appeals.** Any order or civil penalty issued pursuant to this chapter may be appealed using the procedures specified in 661—Chapter 10, except that each time "commissioner" or "commissioner of public safety" appears, it shall be replaced by "state fire marshal."

**224.9(1)** Any order or civil penalty appealed pursuant to this rule shall be stayed until the issuance of a final agency decision.

EXCEPTION: An emergency order issued pursuant to subrule 224.6(4) shall not be stayed and shall take effect immediately upon notification of the order to the owner of the tank.

**224.9(2)** Reserved.

These rules are intended to implement Iowa Code sections 101.21 through 101.27.

[Filed 11/1/07, Notice 9/26/07—published 11/21/07, effective 1/1/08]

# CHAPTER 225
Reserved

# CHAPTER 226
# LIQUEFIED PETROLEUM GAS

[Prior to 5/23/07, see rules 661—51.100(101) to 661—51.102(101)]

**661—226.1(101) General requirements.** The provisions of the International Fire Code, Chapter 38, 2006 edition, published by the International Code Council, 5203 Leesburg Pike, Suite 600, Falls Church, VA 22041, and all references contained therein, are hereby adopted by reference as the general requirements for transportation, storage, handling, and use of liquefied petroleum gas, with the following amendments:

Delete section 3801.1 and insert in lieu thereof the following new section:

3801.1 Scope. Storage, handling and transportation of liquefied petroleum gas (LP-gas) and the installation of LP-gas equipment pertinent to systems for such uses shall comply with this chapter, NFPA 54, ANSI Z223.1-2006 National Fuel Gas Code, 2006 edition, and NFPA 58, Liquefied Petroleum Gas Code, 2004 edition, with the following amendments:

Amend NFPA 54, ANSI Z223.1-2006 National Fuel Gas Code, 2006 edition, as follows:

Delete section 7.3.5.2 and insert in lieu thereof the following new section:

7.3.5.2 Gas piping underground, outside a building, shall not be in physical contact with any concrete. Where it is necessary to install piping that will extend through or under an exterior concrete slab for connection to a regulator or other part of the system, before entering a building, the gas piping shall be sleeved. The sleeve shall extend through the concrete and be sealed only at the end extending above grade to prevent the entrance of insects, debris, or moisture. All piping, fittings, and risers shall be protected against corrosion in accordance with NFPA 54, National Fuel Gas Code, 2004 edition, section 5.6.6.

Amend NFPA 58, Liquefied Petroleum Gas Code, 2004 edition, as follows:

Delete section 5.2.3.1 and insert in lieu thereof the following new section:

5.2.3.1 DOT cylinders in stationary service that are filled on site and therefore are not under the jurisdiction of DOT shall be either requalified in accordance with DOT requirements or visually inspected within 12 years of the date of manufacture and every 5 years thereafter, in accordance with 5.2.3.1(A) through 5.2.3.1(C). The effective date for qualification and requalification requirements of this section shall be July 1, 2010.

(A) Any cylinder that fails one or more of the criteria in 5.2.3.1(C) shall not be refilled or continued in service until the condition is corrected.

(B) Personnel shall be trained and qualified to perform inspections. Initial and refresher training shall be in accordance with rule 661—226.4(101).

(C) Visual inspection shall be performed in accordance with the following:

(1) The cylinder is checked for exposure to fire, dents, cuts, digs, gouges, and corrosion according to CGA C-6-2005, Standards for Visual Inspection of Steel Compressed Gas Cylinders, ninth edition, except that paragraph 5.2.1.1(1) of that standard (which requires tare weight verification) shall not be part of the required inspection criteria.

(2) The cylinder protective collar (where utilized) and the foot ring are intact and are firmly attached.

(3) The cylinder is painted or coated to retard corrosion.

(4) The cylinder pressure relief valve indicates no visible damage, corrosion of operating components, or obstructions.

(5) There is no leakage from the cylinder or its appurtenances that is detectable without the use of instruments.

(6) The cylinder is installed on a firm foundation and is not in contact with the soil.

(7) A cylinder that passes the visual examination shall be marked with the month and year of the examination followed by the letter "E" (for example, 10-01E, indicating requalification in October 2001 by the external inspection method) and the requalifier identification number (RIN) in accordance with the requalifying agency's permit issued by the United States Department of Transportation.

(8) The results of the visual inspection shall be documented, and a record of the inspection shall be retained for a 5-year period or until the cylinder is again requalified, whichever occurs first.

Delete section 6.6.7.1 and insert in lieu thereof the following:

6.6.7.1 Installation of permanent, stationary containers on roofs of buildings shall be prohibited.

Delete section 6.6.7.2.

Delete sections 6.12, 6.12.1, 6.12.2, and 6.12.3.

NOTE: Properties of LP-gases shall be determined in accordance with Appendix B of NFPA 58.

Delete paragraph 6.17.1.2(C) and insert in lieu thereof the following new paragraph:

6.17.1.2(C) Cylinders installed permanently on roofs of buildings shall be prohibited.

Delete section 6.17.11.1, including paragraphs (A) through (F), and insert in lieu thereof the following new section:

6.17.11.1 Cylinders installed permanently on roofs of buildings shall be prohibited.

Delete section 6.17.11.2.

Delete section 7.2.1.1 and insert in lieu thereof the following new section:

7.2.1.1 Transfer operations shall be conducted by qualified personnel meeting the provisions of rule 661—226.4(101).

Delete section 3801.2.

Delete section 3801.3 and insert in lieu thereof the following new section:

3801.3 Construction documents. Where a single container is more than 2,000 gallons (7,570 L) in water capacity or the aggregate capacity of containers is more than 4,000 gallons (15,140 L) in water capacity, the installer shall submit construction documents for such installation to the fire marshal for review and approval. Installation shall not commence until written approval from the fire marshal has been received.

Delete section 3803.1 and insert in lieu thereof the following new section:

3803.1 General. LP-gas equipment shall be installed in accordance with NFPA 54, ANSI Z223.1-2006 National Fuel Gas Code, 2006 edition, and NFPA 58, Liquefied Petroleum Gas Code, 2004 edition, except as otherwise provided in this chapter.

Delete section 3803.2.1.7 and insert in lieu thereof the following new section:

3803.2.1.7 Use for food preparation. Where approved, listed LP-gas commercial food service appliances are allowed to be used for food preparation within restaurants and in attended commercial food-catering operations in accordance with NFPA 54, ANSI Z223.1-2006 National Fuel Gas Code, 2006 edition, the International Mechanical Code, 2006 edition, and NFPA 58, Liquefied Petroleum Gas Code, 2004 edition.

NOTE: The following are deletions from the adoption of the International Fire Code, 2006 edition.

Delete section 3803.3 and insert in lieu thereof the following new section:

3803.3 Location of equipment and piping. Equipment and piping shall not be installed in locations where such equipment and piping are prohibited by NFPA 54, ANSI Z223.1-2006 National Fuel Gas Code, 2006 edition.

Delete section 3805.1 and insert in lieu thereof the following new section:

3805.1 Nonapproved equipment. LP-gas shall not be used for the purpose of operating devices or equipment unless such device or equipment is approved for use with LP-gas in accordance with NFPA 58, Liquefied Petroleum Gas Code, 2004 edition, sections 1.5 through 1.5.3.

Delete section 3806.1 and insert in lieu thereof the following new section:

3806.1 Attendants. Transfer operations shall be conducted by qualified personnel meeting the provisions of rule 661—226.4(101).

Amend sections 308.3.1.1, 3803.2.1.6, 3809.3, and 3809.9 and the exception to section 3809.7 by deleting the phrase "a maximum water capacity of 2.5 gallons" and inserting in lieu thereof the phrase "a maximum water capacity of 2.7 gallons."

**661—226.2(101) Transfer into container.** No person shall transfer any liquefied petroleum gas into a container, regardless of the container's size, if the container has previously been used for the storage of any other product until the container has been thoroughly purged, inspected for contamination, provided

with proper appurtenances, and determined suitable for use as a container for liquefied petroleum gas as prescribed in the standards established under rule 661—226.1(101).

**661—226.3(101) Prohibition of certain refrigerants.** The distribution, sale or use of refrigerants containing liquefied petroleum gas, as defined in Iowa Code section 101.1, for use in mobile air-conditioning systems is prohibited.

**661—226.4(101) Qualifications of personnel.**

**226.4(1)** Persons who transfer liquefied petroleum gas, who are employed to transport liquefied petroleum gas, or whose primary duties fall within the scope of this chapter shall be trained in proper handling procedures.

*a.* Training shall include both initial training and refresher training.

(1) Initial training shall include participation in a training program and shall include both a written qualification assessment (closed-book test) and a skills assessment, based on the objectives set forth in the recognized training program and the requirements of NFPA 54 National Fuel Gas Code, 2006 edition, NFPA 58 Liquefied Petroleum Gas Code, 2004 edition, and any applicable requirements established in this chapter.

(2) Refresher training shall include both a written qualification assessment (closed-book test) and a hands-on skills assessment based on requirements of NFPA 54 National Fuel Gas Code, 2006 edition, NFPA 58 Liquefied Petroleum Gas Code, 2004 edition, and any applicable requirements established in this chapter.

(3) The written qualification assessment shall be proctored through the training agency providing the refresher training or another qualified party.

(4) The hands-on skills assessment shall be completed by the training agency or another qualified party and shall include a verification of completion that shall be signed by the individual completing the required skills and the skills evaluator.

(5) Refresher training shall be provided at least every three years.

*b.* All training shall be documented. Documentation shall be maintained by the current employer of the person receiving the training.

**226.4(2)** Persons who install, service, test, or maintain propane gas utilization equipment, or gas piping systems of which the equipment is a part, or accessories shall be trained in the proper procedures in accordance with applicable codes.

*a.* Initial training shall include participation in a training program and shall include both a written qualification assessment (closed-book test) and a skills assessment, based on the objectives set forth in the recognized training program and the requirements of NFPA 54 National Fuel Gas Code, 2006 edition, NFPA 58 Liquefied Petroleum Gas Code, 2004 edition, and this chapter.

*b.* Refresher training shall include both a written qualification assessment (closed-book test) and a hands-on skills assessment based on requirements of NFPA 54 National Fuel Gas Code, 2006 edition, NFPA 58 Liquefied Petroleum Gas Code, 2004 edition, and this chapter.

*c.* The written qualification assessment shall be proctored through the training agency providing the refresher training or another qualified party.

*d.* The hands-on skills assessment shall be completed by the training agency or another qualified party and shall include a verification of completion that shall be signed by the individual completing the required skills and the skills evaluator.

*e.* Refresher training shall be provided at least every three years.

*f.* All training shall be documented. Documentation shall be maintained by the current employer of the person receiving the training.

**226.4(3)** Successful completion of the written qualification assessment and hands-on skills assessment shall satisfy the refresher training requirements of subrules 226.4(1) and 226.4(2).

**661—226.5(101) Pressure testing.**

**226.5(1)** *Pressure testing required.* After assembly and after any modification or repair, metallic LP-gas piping and hose shall be pressure-tested as follows:

*a.* Piping systems having operating pressures greater than 20 psig shall be pressure-tested in accordance with the following:

(1) Prior to acceptance and initial operation, all piping installations shall be inspected and pressure-tested to determine that the materials, design, fabrication, and installation practices comply with the requirements of this chapter.

(2) Inspection shall consist of visual examination, during or after manufacture, fabrication, assembly, or pressure tests as appropriate. Supplementary types of nondestructive inspection techniques, such as magnetic-particle, radiographic, and ultrasonic, shall not be required unless specifically required in this chapter or a standard or code adopted by reference in this chapter or in the engineering design.

(3) When repairs or additions are made following the pressure test, the affected piping shall be tested. Minor repairs and additions are not required to be pressure-tested, provided that the work is inspected and connections are tested with a noncorrosive, leak-detecting fluid or other leak-detecting methods approved by the authority having jurisdiction.

(4) When new branches are installed to a new appliance or appliances, only the newly installed branch or branches shall be required to be pressure-tested. Connections between the new piping and the existing piping shall be tested with a noncorrosive, leak-detecting fluid or approved leak-detecting methods.

(5) A piping system shall be tested as a complete unit or in sections. A valve in a line shall not be used as a bulkhead between gas in one section of the piping system and test medium in an adjacent section, unless two valves are installed in series with a valved "telltale" located between these valves. A valve shall not be subjected to the test pressure unless it can be determined that the valve, including the valve-closing mechanism, is designed to safely withstand the pressure applied during the test.

(6) Regulator and valve assemblies fabricated independently of the piping system in which they are to be installed shall be permitted to be tested with inert gas or air at the time of fabrication.

(7) The test medium shall be air, nitrogen, carbon dioxide, or an inert gas. Oxygen shall not be used.

(8) Test pressure shall be measured with a pressure-measuring device designed and calibrated to read, record, or indicate a pressure loss due to leakage during the pressure test period. The source of pressure shall be isolated before the pressure tests are made. Mechanical gauges used to measure test pressures shall have a range such that the highest end of the scale is not greater than five times the test pressure.

(9) The test pressure to be used shall be no less than 50 psi and shall not exceed 75 psi.

(10) Expansion joints shall be provided with temporary restraints, if required, for the additional thrust load under test.

(11) Appliances and equipment that are not to be included in the test shall be either disconnected from the piping or isolated by blanks, blind flanges, or caps. Flanged joints at which blinds are inserted to blank off other equipment during the test shall not be required to be tested.

(12) Where the piping system is connected to appliances or equipment designed for operating pressures of less than the test pressure, such appliances or equipment shall be isolated from the piping system by disconnecting them and capping the outlet(s).

(13) Where the piping system is connected to appliances or equipment designed for operating pressures equal to or greater than the test pressure, such appliances or equipment shall be isolated from the piping system by closing the individual appliance or equipment shutoff valve(s).

(14) All testing of piping systems shall be done with due regard for the safety of employees and the public during the test. Bulkheads, anchorage, and bracing suitably designed to resist test pressures shall be installed if necessary. Prior to testing, the interior of the pipe shall be cleared of all foreign material.

(15) Test duration shall be not less than one-half hour for each 500 $ft^3$ (14 $m^3$) of pipe volume or fraction thereof. The duration of the test shall not be required to exceed 24 hours.

EXCEPTION: When a system having a volume of less than 10 $ft^3$ (0.28 $m^3$) is tested, the test duration shall be a minimum of 10 minutes.

*b.* Piping systems having operating pressures of 20 psig or less, all polyethylene and polyamide piping, and piping to which NFPA 54 National Fuel Gas Code, 2006 edition, is applicable, shall be tested in accordance with that code.

**226.5(2)** *Testing for leakage.* All LP-gas piping systems having operating pressures of 20 psig or less and all polyethylene and polyamide piping shall have system and equipment leakage tests performed in accordance with this chapter and Section 8.2 NFPA 54 National Fuel Gas Code, 2006 edition.

**226.5(3)** Tests shall not be made with flame.

**226.5(4)** *Out-of-gas customers or interruption of service system start-up procedure.* When a delivery of propane is made to any on-site container which is out of gas, or if propane service was interrupted, the delivery person shall comply with the following procedures.

*a.* When the "out-of-gas customer" is not present:

(1) The container service valve shall be shut off; and

(2) A tag shall be placed on the container service valve for the equipment the container services, indicating the container is out of service. The tag shall inform the gas customer to contact a qualified person to perform a leak check or other test on the system, as required by rules of the fire marshal, before turning on the container. Further action is the responsibility of the customer.

*b.* When the "out-of-gas customer" is present:

(1) The container service valve shall be shut off; and

(2) The gas customer shall be informed that the container is out of service and a qualified person must perform a leak check or other test on the system as required by this chapter or Section 8.2 of NFPA 54 National Fuel Gas Code, 2006 edition, before turning on the container service valve. Further action is the responsibility of the customer.

**661—226.6(101) Damages—reporting.**

**226.6(1)** *Responsibility to report.*

*a.* Any person who causes damage to any LP-gas piping system, including hoses, other than a person qualified in accordance with rule 661—226.4(101) and who has been authorized by the owner or occupant to repair the LP-gas installation, shall immediately turn off the supply of propane to the affected system and shall immediately notify the local fire department. After the call to the fire department, the person shall immediately notify the occupant of the property of the damage and the shutoff. If the occupant of the property cannot be contacted immediately, the owner of the property shall immediately be notified.

*b.* If the occupant or owner of property on which an LP-gas system is located has received notification that the system has been damaged and the occupant or owner finds that the supply of propane to the system has not been shut off, then the occupant or owner shall immediately shut off the supply of propane to the system and shall immediately notify the local fire department.

*c.* If the occupant or owner of property on which an LP-gas system is located finds that an LP-gas piping system has been damaged and the damage has not been reported to the occupant or owner as required by paragraph *"a"* of this subrule, the occupant or owner shall immediately shut off the supply of propane to the system and shall immediately notify the local fire department.

**226.6(2)** *Notification to qualified person.* The occupant or owner of the property on which an LP-gas system is located shall notify a person qualified pursuant to rule 661—226.4(101) of any damage to an LP-gas piping system immediately after receiving notification or otherwise becoming aware of the damage and shall arrange for the qualified person to inspect, repair, and test the damaged system prior to restoration of service to the damaged or repaired system.

Arrangement by the occupant or owner of the property for required repairs and testing shall not relieve the person who damaged the system of any liability, including the costs of repair or testing.

**226.6(3)** *Restoration of service.* LP-gas service shall not be restored to an LP-gas piping system which has been damaged until the system has been repaired and tested in accordance with rule 661—226.5(101).

These rules are intended to implement Iowa Code chapter 101.

[Filed 5/3/07, Notice 3/28/07—published 5/23/07, effective 7/1/07]
[Filed 10/31/07, Notice 9/12/07—published 11/21/07, effective 1/1/08]

CHAPTERS 227 to 230
Reserved

# CHAPTER 231
# MANUFACTURING, STORAGE, HANDLING, AND USE OF EXPLOSIVE MATERIALS

NOTE: Any person who purchases, possesses, transports, stores, or uses explosive materials must comply with all applicable federal laws and regulations as well as with Iowa Code chapter 101A and this chapter.

**661—231.1(101A) Explosive materials.** NFPA 495, "Explosive Materials Code," 2001 edition, is hereby adopted by reference as the rules governing the manufacture, transportation, storage, and use of explosive materials in the state of Iowa, with the following amendments:

Delete the phrase "authority having jurisdiction" wherever it occurs and insert in lieu thereof the phrase "fire marshal."

Delete the phrases "issuing authority" and "permit-issuing authority" wherever they occur and insert in lieu thereof the phrase "fire marshal."

Amend Section 1.3 to read as follows:

1.3 Equivalency.

Nothing in this code is intended to prevent the use of systems, methods, or devices of equivalent or superior quality, strength, fire resistance, effectiveness, durability, and safety over those prescribed by this code. Any request for approval to use systems, methods, or devices other than those specified in this chapter shall be submitted to the fire marshal as a request for a waiver of a rule as provided by rule 661—5.15(17A,100).

Delete Sections 4.1.5, 4.1.6, 4.1.9, 4.1.9.1, 4.2.3, 4.3 through 4.3.2, 4.4 through 4.4.5, 4.5.2, 4.5.3, 4.6 through 4.6.3, 4.7 through 4.7.4, 4.8.6, 4.9.2, and 4.9.3.

Amend Sections 4.2, 4.2.1, 4.2.2, 4.5, 4.5.1, 4.8.1, 4.8.3, 4.8.4, and 4.9.1 by deleting the word "permit" wherever it occurs and inserting in lieu thereof the word "license" and by deleting the word "permits" wherever it occurs and inserting in lieu thereof the word "licenses."

Add the following new section:

4.2.4 A person who has a current, valid permit to use explosives, which has been issued by a sheriff or police chief pursuant to Iowa Code section 101A.3, may purchase, possess, transport, store, and use explosive materials within the jurisdiction of the sheriff or police chief who issued the permit. Any purchase, possession, transportation, storage, or detonation of explosive materials by a person with a current, valid permit that has been issued by a sheriff or police chief is strictly limited to the conditions expressly stated in the permit. Possession of a permit creates no obligation on the part of any vendor of explosive materials to supply such materials to the holder of the permit.

Amend Section 8.4.6 to read as follows:

8.4.6 Any person who stores explosive materials shall notify the local fire department having jurisdiction for fire safety in the locality in which the explosive materials are being stored of the type, magazine capacity, and location of each site where such explosive materials are stored. Such notification shall be made orally before the end of the day on which storage of the explosive materials commenced and in writing within 48 hours from the time such storage commenced. A fire department which has received information pursuant to this section may redisseminate the information to the state fire marshal, another fire department which is responding to a fire or other incident at the location at which the explosives are stored, or to a law enforcement agency. Information received by a fire department pursuant to this section shall not be redisseminated except as provided in this section.

Amend Section 8.6.3 to read as follows:

8.6.3 Type 3 Magazines. A Type 3 magazine shall be a "day box" or portable structure used for the temporary storage of explosive materials. A Type 3 magazine shall be fire resistant, theft resistant, and weather resistant.

(1) The magazine shall be equipped with one steel padlock (which shall not be required to be protected by a steel hood) having at least five tumblers and a case-hardened steel shackle at least 9.5 mm

(3/8 in.) in diameter. Doors shall overlap the sides by at least 25.4 mm (1 in.). Hinges and hasps shall be attached by welding, riveting, or bolting (nuts on inside).

(2) The magazine shall be constructed of not less than 12-gauge [2.66-mm (0.1046-in.)] steel, lined with at least 12.7-mm (½-in.) plywood or 12.7-mm (½-in.) masonite-type hardboard.

(3) Type 3 magazines containing explosive materials shall be within line-of-site vision of a blaster or, if not within line-of-site vision of a blaster, shall be secured if in a vehicle or in a secure building, facility, or area.

This rule is intended to implement Iowa Code section 101A.5.

[Filed 9/22/05, Notice 3/16/05—published 10/12/05, effective 1/1/06]

CHAPTERS 232 to 250
Reserved

# CHAPTER 251
# FIRE FIGHTER TRAINING AND CERTIFICATION

[Prior to 9/29/04, see 661—Ch 54]

**661—251.1(100B) Definitions.** The following definitions apply to rules 661—251.1(100B) to 251.204(100B):

*"Emergency incident"* means any incident involving a fire or other hazardous situation to which personnel of a fire department respond.

*"NFPA"* means the National Fire Protection Association, Batterymarch Park, Quincy, MA 02269. References to the form "NFPA xx," where "xx" is a number, refer to the NFPA standard or pamphlet of the corresponding number.

*"Structural fire fighting"* means fire fighting in a hazardous environment which requires the use of self-contained breathing apparatus.

**661—251.2** to **251.100** Reserved.

## MINIMUM TRAINING STANDARDS

**661—251.101(100B) Minimum training standard.** On or after July 1, 2010, any member of a fire department shall have completed the training requirements identified in the job performance requirements for the fire fighter I classification in NFPA 1001, Standard for Fire Fighter Professional Qualifications, 2002 edition, chapter 5, prior to the member's engaging in structural fire fighting. Each fire department shall identify its members who are or will be engaged in structural fire fighting and shall ensure that any member engaged in structural fire fighting on or after July 1, 2010, has completed the training requirements specified in this rule prior to the member's engaging in structural fire fighting.

NOTE: A fire fighter is not required to be certified to meet this requirement. Training to meet this requirement may be provided by the fire service training bureau, a community college, a regional fire training facility, or a local fire department, or any combination thereof.

EXCEPTION 1: A fire fighter who received training which complied with the job performance requirements for the fire fighter I classification contained in an earlier edition of NFPA 1001 shall be deemed to have met this requirement, provided that records documenting the training are maintained in accordance with rule 661—251.104(100B).

EXCEPTION 2: The chief or the training officer of any fire department may apply to the fire marshal by June 1 of any year for an extension of the deadline to meet the training requirement for members of the department engaged in structural fire fighting. Any such extension shall be for one year and may be renewed annually upon application. An extension shall be granted only if the department has requested training required under this rule, with training costs to be offset through funding from the fire fighting training and equipment fund, pursuant to 661—Chapter 259, and funds to offset the cost of the training have not been available or have been inadequate to fully offset the cost of the training. The extension may be for all or some of the fire fighters in the department. The application shall be in a form specified by the fire marshal and shall list by name each fire fighter for whom an extension is requested. The extension, if granted, shall list by name the fire fighters to whom the extension applies and shall apply only to those listed.

**661—251.102(100B) Other training.** Any member of a fire department who serves in a capacity other than structural fire fighting at an emergency incident on or after July 1, 2010, shall have received training based on the duties the member might perform at an emergency incident. Training to meet this requirement may be provided by the fire service training bureau, a community college, a regional fire training facility, or a local fire department, or any combination thereof.

**661—251.103(100B) Continuing training.** After July 1, 2010, fire department members shall participate in at least 24 hours of continuing training annually, which shall be selected from the following subject areas:

- Personal protective equipment and respiratory protection
- Structural fire fighting techniques including standard operating policies or standard operating guidelines
- Ground ladders
- Hose and hose appliances
- Ventilation
- Forcible entry
- Search and rescue techniques
- Fire fighter safety
- Incident management system or incident command system
- Emergency vehicle driver-operator
- Hazardous materials first responder—operations level
- Emergency medical service (EMS) training
- Additional training based on standard operating procedures or standard operating guidelines
- Other Occupational Safety and Health Administration (OSHA)-related training, such as blood-borne pathogen protection
- Specialty training such as confined space entry, vehicle extrication, rescue techniques, wildland or agricultural fire fighting techniques
- Emergency response to terrorism
- Any other training designed to meet local training needs

NOTE: Training to meet this requirement may be provided by the fire service training bureau, a community college, a regional fire training facility, or a local fire department, or any combination thereof.

**661—251.104(100B) Record keeping.** Each fire department shall maintain training records for each individual member of the department who participates in emergency incidents. These training records shall identify, for all training completed by the individual fire fighter, the person or persons who provided the training, the dates during which the training was completed, the location or locations where the training was delivered, and a description of the content of the training.

**661—251.105** to **251.200** Reserved.

FIRE FIGHTER CERTIFICATION

**661—251.201(100B) Fire fighter certification program.** There is established within the fire service training bureau of the fire marshal division a fire fighter certification program for the state of Iowa, which shall be known as the Iowa fire service certification system. The Iowa fire service certification system is accredited by the International Fire Service Accreditation Congress to certify fire service personnel to accepted national standards. All certifications issued by the Iowa fire service certification system shall be based upon nationally accepted standards. Participation in the Iowa fire service certification system is voluntary in that state law does not require certification to work or volunteer as a fire fighter in Iowa. However, some fire departments within the state require certification for continued employment or promotion. Inquiries regarding such requirements should be directed to the hiring or employing department.

Inquiries and requests regarding the Iowa fire service certification system should be directed to Iowa Fire Service Certification System, Fire Service Training Bureau, 3100 Fire Service Road, Ames, Iowa 50010-3100. The bureau can be contacted by telephone at (888)469-2374 (toll-free) or at (515)294-6817, by fax at (800)722-7350 (toll-free) or (515)294-2156, or by electronic mail at fstbinfo@dps.state.ia.us. Further information can be found on the Web site for the fire service training bureau at www.state.ia.us/government/dps/fm/fstb.

**251.201(1)** *Eligibility.* Any person seeking certification through the Iowa fire service certification system shall be a current member of a fire, emergency, or rescue organization within the state of Iowa and shall be at least 18 years of age.

EXCEPTION: Persons not meeting the requirement of membership in a fire, emergency, or rescue organization may be granted exceptions to this requirement on an individual basis. Individuals seeking such exceptions shall address these requests to the fire service training bureau.

**251.201(2)** *Application.* Application forms for each level of fire fighter certification may be obtained from the fire service training bureau, or on the bureau's Web site at www.state.ia.us/government/dps/fm/fstb. In order to enter the certification program, an applicant shall submit a completed application, accompanied by the required fee, to the fire service training bureau. The fee must accompany the application form, although a purchase order from a public agency or private organization may be accepted in lieu of prior payment. The application and fee shall be submitted no less than two weeks prior to the date of any examination in which the applicant wishes to participate.

**661—251.202(100B) Certification standards.** Standards for Iowa fire fighter certification are based upon nationally recognized standards established by the National Fire Protection Association (NFPA), 1 Batterymarch Park, P.O. Box 9101, Quincy, Massachusetts 02269-9101. Certification at each level in the Iowa fire service certification system results in national certification as well.

**251.202(1)** *Fire fighter.*

*a.* *Fire fighter I.* Certification as a fire fighter I is based upon the requirements for fire fighter I certification established in NFPA 1001, "Standard for Fire Fighter Professional Qualifications," 2002 edition, chapter 5.

*b.* *Fire fighter II.* Certification as a fire fighter II is based upon the requirements for fire fighter II certification established in NFPA 1001, "Standard for Fire Fighter Professional Qualifications," 2002 edition, chapter 6.

**251.202(2)** *Driver/operator.*

*a.* *Driver/operator (pumper).* Certification as a driver/operator (pumper) is based upon the requirements for fire department vehicle driver/operator (pumper) certification established in NFPA 1002, "Standard for Fire Vehicle Driver/Operator Professional Qualifications," 2002 edition, chapter 5.

*b.* *Driver/operator (aerial).* Certification as a driver/operator (aerial) is based upon the requirements for fire department vehicle driver/operator (aerial) certification established in NFPA 1002, "Standard for Fire Vehicle Driver/Operator Professional Qualifications," 2002 edition, chapter 6.

**251.202(3)** *Fire officer.*

*a.* *Fire officer I.* Certification as a fire officer I is based upon the requirements for fire officer I certification established in NFPA 1021, "Standard for Fire Officer Professional Qualifications," 2003 edition, chapter 4.

*b.* *Fire officer II.* Certification as a fire officer II is based upon the requirements for fire officer II certification established in NFPA 1021, "Standard for Fire Officer Professional Qualifications," 2003 edition, chapter 5.

**251.202(4)** *Fire inspector.* Certification as a fire inspector I is based upon the requirements for certification as a fire inspector I established in NFPA 1031, "Standard for Professional Qualifications for Fire Inspector and Plans Examiner," 2003 edition, chapter 4.

**251.202(5)** *Fire investigator.* Certification as a fire investigator is based upon the requirements for certification as a fire investigator established in NFPA 1033, "Standard for Professional Qualifications for Fire Investigator," 2003 edition, chapter 4.

**251.202(6)** *Fire service instructor.*

*a.* *Fire service instructor I.* Certification as a fire service instructor I is based upon the requirements for certification as a fire service instructor I established in NFPA 1041, "Standard for Fire Service Instructor Professional Qualifications," 2002 edition, chapter 4.

*b.* *Fire service instructor II.* Certification as a fire service instructor II is based upon the requirements for certification as a fire service instructor II established in NFPA 1041, "Standard for Fire Service Instructor Professional Qualifications," 2002 edition, chapter 5.

**251.202(7)** *Responder to hazardous materials incidents.*

*a. Responder to hazardous materials incidents (awareness).* Certification as a responder to hazardous materials incidents (awareness) is based upon the requirements for certification as a responder to hazardous materials incidents (awareness) established in NFPA 472, "Standard for Professional Competence of Responders to Hazardous Materials Incidents," 2002 edition, chapter 4.

*b. Responder to hazardous materials incidents (operations).* Certification as a responder to hazardous materials incidents (operations) is based upon the requirements for certification as a responder to hazardous materials incidents (operations) established in NFPA 472, "Standard for Professional Competence of Responders to Hazardous Materials Incidents," 2002 edition, chapter 5.

**661—251.203(100B) Fees.** Current certification application fees and any other fees related to participation in the certification process shall be listed in the publication Certification Procedures Guide for each level of certification, published by the fire service training bureau and available on request from the fire service training bureau. The information in each guide shall be effective upon publication until superseded by publication of a later edition. Prospective candidates who are considering application for a particular level of certification should contact the fire service training bureau for the latest date of publication of the Certification Procedures Guide.

Fees may be paid by personal check made payable to Iowa Department of Public Safety—Fire Service Training Bureau, credit card, purchase order from a public agency or private organization, check or draft from a public agency or private organization, or money order. The check, credit card information, purchase order, money order or draft shall be submitted with the application.

**661—251.204(100B) Certification, denial, and revocation of certification.**

**251.204(1)** *Certification.* Upon completion of the requirements for certification, the applicant's name shall be entered into the Iowa certification database maintained by the fire service training bureau for the respective level of certification and into the National Certification Data Base maintained by the International Fire Service Accreditation Congress. Individuals who successfully complete the certification requirements shall also receive an individualized certificate awarding national certification from the fire service training bureau, which will bear a numbered seal from the International Fire Service Accreditation Congress, and additional insignia from the fire service training bureau.

**251.204(2)** *Denial of certification.* Certification shall be denied to any applicant who fails to meet all of the requirements for the type of certification, who knowingly submits false information to the fire service training bureau, or who engages in fraudulent activity during the certification process.

**251.204(3)** *Revocation.* The fire marshal may revoke the certification of any individual who is found to have knowingly provided false information to the fire service training bureau during the certification process or to have engaged in fraudulent activity during the certification process.

**251.204(4)** *Appeals.* Any person who is denied certification or whose certification is revoked may appeal the denial or revocation. An appeal of a denial or revocation of certification shall be made to the commissioner of public safety within 30 days of the issuance of the denial or revocation using the contested case procedures specified in 661—Chapter 10.

These rules are intended to implement Iowa Code chapter 100B.

[Filed emergency 6/22/00—published 7/12/00, effective 7/1/00]
[Filed 3/2/01, Notice 7/12/00—published 3/21/01, effective 5/1/01]
[Filed 9/9/04, Notice 4/14/04—published 9/29/04, effective 12/1/04]
[Filed 5/18/05, Notice 7/7/04—published 6/8/05, effective 8/1/05]

CHAPTERS 252 to 258
Reserved

# CHAPTER 259
# FIRE FIGHTER TRAINING AND EQUIPMENT FUNDS
[Prior to 1/5/05, see 661—Ch 55]

**661—259.1** to **259.100** Reserved.

## DIVISION I
## VOLUNTEER FIRE FIGHTER TRAINING AND EQUIPMENT FUND

**661—259.101(17A,77GA,ch1222) Establishment of fund.** There is established in the fire marshal division the volunteer fire fighter training and equipment fund. The fund, to the extent of appropriations made available in each state fiscal year, shall provide support for the training and equipment needs of volunteer fire fighters. Funding is available to individual fire departments for equipment and to organizations or individuals delivering training to support courses available at no cost to volunteer fire fighters receiving the training or to their respective departments.

**259.101(1)** Advisory committee. The fire marshal may establish a volunteer fire fighter training and equipment fund advisory committee of persons knowledgeable about the training and equipment needs of volunteer fire fighters and volunteer fire departments to advise on allocation of moneys from the volunteer fire fighter training and equipment fund, including the selection of recipients in competitive situations.

**259.101(2)** Reserved.

**661—259.102(17A,77GA,ch1222) Allocations.**

**259.102(1)** *Administrative allocation.* Each year, the fire marshal shall allocate a portion of the funds appropriated to the volunteer fire fighter training and equipment fund for administration of the fund, including personnel expenses. A portion of the administrative allocation shall be made available to the fire service training bureau to defray the cost of maintaining records of course attendance and completion by volunteer fire fighters and for related expenses.

**259.102(2)** *Allocation to fire service training bureau.* The fire marshal may allocate a portion of the moneys appropriated to the volunteer fire fighter training and equipment fund in any year to the fire service training bureau for the purpose of delivering training courses offered by the fire service training bureau to volunteer fire fighters at no cost to the volunteer fire fighters or their respective fire departments.

**259.102(3)** *Allocation for equipment purchases.* The fire marshal may allocate a portion of the moneys appropriated to the volunteer fire fighter training and equipment fund in any year to equipment purchases for volunteer fire departments. Awards of funding to volunteer fire departments for equipment purchases shall be on a competitive basis within guidelines published in an announcement of the availability of these funds.

**259.102(4)** *Allocation to community college consortium.* The fire marshal may allocate a portion of the moneys appropriated to the volunteer fire fighter training and equipment fund in any year to a consortium of community colleges to deliver training to volunteer fire fighters at no cost to the fire fighters receiving this training or to their respective fire departments. These funds shall be administered in accordance with an agreement entered into between the department of public safety and community colleges pursuant to Iowa Code chapter 28E.

**661—259.103(17A,77GA,ch1222) Awards to private providers of training.** Funds appropriated each year to the volunteer fire fighter training and equipment fund which remain after the allocations set forth in rule 661—259.102(17A,77GA,ch1222) have been implemented shall be awarded on a competitive basis to private providers of training to provide training to volunteer fire fighters at no cost to the fire fighters receiving the training or to their respective fire departments.

**259.103(1)** *Funding requests.* Requests for funding of training courses instructed by private persons shall be submitted to the Volunteer Fire Fighter Training and Equipment Fund, Fire Marshal Division, Department of Public Safety, 217 East 7th, Des Moines, Iowa 50319, in a format specified by the fire

marshal. Requests for funding in any state fiscal year must be received on or before July 15 following the beginning of the fiscal year on July 1.

EXCEPTION: If moneys which have been previously unexpended become available for additional training courses during the course of a fiscal year, notice shall be given to certified fire service instructors of the availability of these moneys. In this event, the deadline for receiving applications shall be as stated in the notice of availability.

**259.103(2)** *Instructor qualifications.* Any person instructing a training course paid for by the volunteer fire fighter training and equipment fund shall be certified as a fire service instructor by the fire service training bureau or another organization recognized by the National Board on Fire Service Professional Qualifications, P.O. Box 690632, Quincy, Massachusetts 02269, or the International Fire Service Accreditation Congress, 1700 W. Tyler, Oklahoma State University, Stillwater, Oklahoma 74078-8075.

EXCEPTION: A person who has applied to the fire service training bureau for certification as a fire service instructor I and who is actively pursuing such certification may instruct a training course paid for by the volunteer fire fighter training and equipment fund, provided that the instruction is delivered under the direct supervision of a person who is currently certified as a fire service instructor I by the fire service training bureau or by another organization recognized by the National Board on Fire Service Professional Qualifications or the International Fire Service Accreditation Congress.

**259.103(3)** *Course approval.* Each course paid for by the volunteer fire fighter training and equipment fund must have previously been approved by the fire service training bureau. Any person who is certified as a fire service instructor I or who is actively pursuing certification as a fire service instructor I should contact the fire service training bureau for information about the course approval process at the following address: Fire Service Training Bureau, 3100 Fire Service Rd., Ames, Iowa 50011-3100.

**259.103(4)** *Course availability.* Any course which is approved and funded from the volunteer fire fighter training and equipment fund must be available to any volunteer fire department in the state of Iowa.

**259.103(5)** *Notification.* Each person applying for moneys from the volunteer fire fighter training and equipment fund for delivery of training to volunteer fire fighters shall receive notification indicating whether the request has been approved or denied. Any approval of a request for funding is contingent upon the execution of a contract between the department of public safety and the provider of the proposed training course or courses setting out specific terms and conditions for the delivery of the proposed course or courses. Any person whose request for funding is denied may appeal that decision to the commissioner of public safety by filing a written notice of appeal within 14 calendar days of the date on which the notice indicating denial of the request is dated. Appeals of denials of funding shall be treated as contested cases and processed according to the procedures set out in rules 661—10.301(17A) through 661—10.332(17A).

These rules are intended to implement 1998 Iowa Acts, chapter 1222, section 19(8).

**661—259.104(100B) Paul Ryan memorial fire fighter safety training fund.** Funds collected from the sale of special fire fighter license plates and deposited to the Paul Ryan memorial fire fighter safety training fund shall be utilized by the fire service training bureau to defray the cost of training provided to any fire fighter currently employed by or serving as a volunteer with any fire department in Iowa. Application of these funds shall be limited to defraying the cost of training courses approved for reimbursement from the volunteer fire fighter training and equipment fund established in rule 661—259.101(17A,77GA,ch1222).

This rule is intended to implement Iowa Code Supplement section 100B.12.

**661—259.105(80GA,ch1175) Volunteer fire fighter preparedness fund.** Funds appropriated to the volunteer fire fighter preparedness fund pursuant to 2004 Iowa Acts, Senate File 2298, section 434, shall be utilized by the fire service training bureau to defray the cost of training provided to fire fighters currently serving as volunteers with any fire department in Iowa. Application of these funds shall be

limited to defraying the cost of training courses approved for reimbursement from the volunteer fire fighter training and equipment fund established in rule 661—259.101(17A,77GA, ch1222).

This rule is intended to implement 2004 Iowa Acts, chapter 1175, section 434.

**661—259.106** to **259.200** Reserved.

DIVISION II
FIRE FIGHTING EQUIPMENT REVOLVING LOAN FUND

**661—259.201(80GA,ch177) Fire fighting equipment revolving loan fund.** There is established in the fire service training bureau in the fire marshal division the fire fighting equipment revolving loan fund.

**661—259.202(80GA,ch177) Purpose and scope.** The fire fighting equipment revolving loan fund is established to assist local fire departments to complete purchase or repairs of equipment used in the performance of the departments' fire fighting duties, when the acquisition or repair of such equipment would be impractical in the absence of assistance from the fund. Each payment of funds from the fund to a local fire department shall be a loan awarded in compliance with rules 661—259.201(80GA,ch177) to 661—259.207(80GA, ch177), and shall be for the specific purpose established in a contract entered into between the department of public safety and either the local fire department receiving the funds; or the city, county, or township of which the fire department is a part; or another legal entity authorized to enter into legally binding commitments on behalf of the fire department.

**661—259.203(80GA,ch177) Definitions.** For purposes of rules 661—259.201(80GA,ch177) to 661—259.207(80GA, ch177), the following definitions apply:

*"Default"* or *"in default"* means that more than one payment on a loan is currently due.

*"Local fire department"* means a paid, volunteer, or combination fire protection service provided by a benefited fire district under Iowa Code chapter 357B or by a county, municipality or township, or a private corporate organization that has a valid contract to provide fire protection service for a benefited fire district, county, municipality, township or governmental agency. "Local fire department" does not include a military or private industrial fire department or service.

*"NFPA"* means the National Fire Protection Association, Batterymarch Park, Quincy, MA 02269. References to the form "NFPA xx," where "xx" is a number, refer to the NFPA standard or pamphlet of the corresponding number.

*"PASS"* means personal alert safety system.

*"SCBA"* means self-contained breathing apparatus.

**661—259.204(80GA,ch177) Application process.**

**259.204(1)** *Notice of availability of funds.* Whenever funds are available for loans through the fire fighting equipment revolving loan fund, the department shall publish notice of the availability of those funds in the Iowa Administrative Bulletin and shall notify fire service organizations, including, but not limited to, the Iowa Firemen's Association, the Iowa Fire Chiefs Association, and the Iowa Association of Professional Fire Chiefs, of the availability of those funds, the procedure for applying for loans through the program, the deadline for applying for funds, and the provisions of rules 661—259.201(80GA,ch177) to 661—259.207(80GA, ch177). All local fire departments in Iowa known to the fire service training bureau shall receive notice by mail or, when available, electronic mail. In addition, notice of availability of funds and the application procedure shall be published on the department's Web site.

EXCEPTION: No separate notice of availability of funds shall be published in the Iowa Administrative Bulletin for the initial round of loan application and review. The schedule for the initial loan application and review process is as follows:

1. The application process officially opens on January 15, 2004;
2. The deadline for submitting applications to be considered in the initial round is March 1, 2004; and

3. The target date for the fire marshal to announce decisions regarding the first round of applications is April 1, 2004.

**259.204(2)** *Application.* Application for a loan from the fire fighting equipment revolving loan fund shall be made on an application form provided by the fire service training bureau. A completed application shall be submitted to the fire service training bureau by the deadline specified in the notice of availability of public funds and shall include any attached materials required in the instructions provided with the application form.

*a.* An application form shall be completed by the local fire department. The application shall include contact information, loan amount requested, purpose of the loan, statement of need, and current financial information, and any additional information specified on the application form or accompanying instructions, and shall be signed by an official authorized to enter into contracts on behalf of the local fire department.

*b.* In addition to the application, the following information will be required prior to loan approval:

(1) Documentation that the department requesting the loan meets the definition of a "local fire department."

(2) Financial statements showing income, expenses, assets, liabilities, and sources of income for the department requesting the loan for a three-year period prior to the loan request date.

(3) Verification that the match requirement will be met. A letter from the executive or chief financial officer of the agency funding the match requirement will normally be sufficient.

(4) A copy of the contract, bid specifications, or proposal for purchase of the equipment/apparatus to be purchased with the loan proceeds, or repair work order, if applicable.

**259.204(3)** *Loan application review.*

*a.* The fire marshal, or another staff member of the fire marshal division designated by the fire marshal, and the chief of the fire service training bureau, or another staff member of the fire service training bureau designated by the bureau chief, shall review each application for completeness and compliance with rules 661—259.201(80GA,ch177) to 661—259.207(80GA,ch177). The fire marshal may assign additional staff of the fire marshal division to review applications and may request assistance from other employees of the department of public safety in the review process.

*b.* The state fire service and emergency response council, or a subcommittee of the council established for this purpose, shall serve as an advisory committee to the fire marshal in the loan application review process, and shall recommend to the fire marshal funding, partial funding, or denial of each application. Recommendations regarding loan applications shall be based upon availability of funds in relation to the total funds requested by eligible applicants, documentation of need for the proposed purchase or repair, and documentation of likely ability of the local fire department applying for a loan to repay the loan.

*c.* Decisions to award or not to award loans shall be made by the fire marshal.

**259.204(4)** *Appeals.* If a local fire department's application is denied or partially funded by the fire marshal, the department may appeal the decision of the fire marshal to the commissioner of public safety using procedures for appeals set out in 661—Chapter 10.

**661—259.205(80GA,ch177) Allowable acquisitions.** Loans from the fire fighting equipment revolving loan fund may be used to acquire the following equipment or repair services with the limitations indicated:

1. Fire fighting apparatus, including pumpers, tankers, ladder trucks, hazardous materials emergency response vehicles, or rescue vehicles. Any apparatus obtained with loan funds must comply with applicable NFPA standards, as identified by the fire marshal. Loans in this category may be awarded in amounts between $25,000 and $150,000.

2. Personal protective equipment and communications equipment, including personal protective clothing (structural and wild land) that includes helmets, coats, boots, pants, eye protection, gloves, and protective hoods; SCBA with integrated PASS devices; and radio communications devices. Radio communications devices obtained with loan funds must be interoperable with equipment utilized by agencies with which the agency obtaining the equipment has mutual aid agreements, if such interoperable

equipment is available. Equipment obtained must comply with applicable NFPA standards, as identified by the fire marshal. Loans for purchase in this category are limited to amounts between $10,000 and $50,000.

3. Repairs made to apparatuses identified in paragraph "1." Loans in this category are limited to amounts between $10,000 and $50,000.

4. Purchase of accessory equipment, including fire suppression equipment such as hoses, ladders, small fireground tools, ventilation equipment, or vehicle extrication and rescue equipment. Equipment obtained with loan funds must comply with applicable NFPA standards, as identified by the fire marshal. Loans in this category are limited to amounts between $10,000 and $50,000.

5. The fire marshal, acting on the advice of the fire service and emergency response council, may establish priorities for funding through the revolving loan fund. If such priorities are established, they will be included in the notice of availability of funds and shall be utilized only if the total amount of funding requested exceeds the total of funds available to loan.

**661—259.206(80GA,ch177) Eligibility requirements and restrictions.**

**259.206(1)** Any local fire department in the state of Iowa is eligible to apply for a loan.

**259.206(2)** Loan applicants shall be required to provide a 10 percent match.

**259.206(3)** All successful loan applicants shall comply fully with the fire incident reporting requirements of the fire marshal division.

**259.206(4)** No loan shall be made to a local fire department serving a population in excess of 30,000 people which will result in excess of 50 percent of the total funds loaned at any given time being loaned to local fire departments serving populations in excess of 30,000 people, unless the fire marshal finds that there are no eligible applications pending from local fire departments serving populations of 30,000 people or less.

**259.206(5)** Following approval, loan funds will be provided only after the local fire department receiving the loan submits documentation showing that the department has either acquired, contracted for, or issued a purchase order for the equipment. Disbursement of the loan shall be in the form of a warrant payable either to the local fire department and the vendor or vendors supplying the equipment or repair services, or solely to the vendor or vendors, or, with the approval of the fire marshal, solely to the local fire department receiving the loan.

**259.206(6)** A local fire department is eligible for only one loan during any five-year period or for the duration of an existing loan from this program, whichever is longer.

**259.206(7)** A local fire department that has been in default on a loan is not eligible for additional loans through this program for a period of two years beyond the time specified in subrule 259.206(6). Any prior history of defaulting on a loan from the revolving loan fund will be taken into account in evaluating a department's ability to repay a loan, pursuant to subrule 259.204(3), paragraph *"b."*

**259.206(8)** A local fire department receiving a loan is subject to a financial audit and any operational or program audits necessary to verify compliance with any requirements or conditions of the loan.

**661—259.207(80GA,ch177) Loan origination fee and repayment schedule.**

**259.207(1)** Each approved loan shall carry an origination fee of 1 percent of the loan amount, which shall be withheld by the fire service training bureau from the original payout of the loan.

**259.207(2)** A repayment schedule for each loan shall be established at the time the loan is awarded, with a minimum of two payments per year for the duration of the loan. Generally, loans of $50,000 or less shall be repaid within a five-year period, and loans of more than $50,000 shall be repaid within a ten-year period, although the fire marshal may allow variations for good cause. There will be no penalty for early payment. Each payment shall be by warrant, check, or money order made payable to Fire Service Training Bureau, Iowa Department of Public Safety, and shall be clearly marked "Repayment of Loan from Fire Fighting Equipment Revolving Loan Fund."

**259.207(3)** During any period when a loan is in default, there shall be a penalty of 1.5 percent of the remaining unpaid principal of the loan per month added to the amount of the loan.

These rules are intended to implement 2003 Iowa Acts, chapter 177, section 11.

**661—259.208** to **259.300** Reserved.

DIVISION III
REGIONAL TRAINING FACILITY FUNDS

**661—259.301(100B) Regional training center program.**

**259.301(1)** There is established in the fire marshal division the regional emergency response training center program. The program shall operate under the authority of the fire marshal and shall operate within the fire service training bureau. Day-to-day administration of the program shall be under the supervision of the chief of the fire service training bureau.

**259.301(2)** The purposes of the regional emergency response training center program are:

*a.* To administer funds appropriated for the program as directed by the general assembly, under the direction of the fire marshal, and in cooperation with the state fire service and emergency response council.

*b.* To develop training curricula in cooperation with regional emergency response training facilities.

*c.* To encourage cooperation among regional emergency response training facilities, between regional emergency response training facilities and the fire service training bureau, and among the fire service training bureau, regional emergency response training facilities, and other providers of training to emergency responders.

**661—259.302(100B) Definitions.** The following definitions apply to rules 661—259.301(100B) through 661—259.305(100B):

*"Allocated funds"* means funds allocated by the general assembly for the construction of a particular regional emergency response training center.

*"Bureau"* means the fire service training bureau in the fire marshal division of the department of public safety.

*"Competitive funds"* means funds which are appropriated or otherwise available to the regional emergency response training center program for construction of regional emergency response training facilities, but which are not designated by the general assembly for the use of a particular regional emergency response training center.

*"Department"* means the department of public safety.

*"Division"* means the fire marshal division of the department of public safety.

*"Lead agency"* means one of the community colleges identified as lead agencies in Iowa Code section 100B.22, subsection 1.

*"Partner agency"* means one of the agencies identified as partners in Iowa Code section 100B.22, subsection 1.

*"Regional emergency response training center"* means one of the centers identified in Iowa Code section 100B.22, subsection 1.

*"Training facility"* includes, but is not limited to, the following:

1. Burn building.
2. Smokehouse.
3. Drill tower.
4. Skills building.
5. Training pads with specialized training props.
6. Maintenance facilities.

**661—259.303(100B) Availability of funds.** Lead agencies of regional emergency response training facilities, acting in concert with their respective partner agencies, may apply for and receive funds appropriated or otherwise available for construction of regional emergency response training facilities.

**661—259.304(100B) Application process.**

**259.304(1)** *Applications for funds.*

*a.* Application for either allocated funds or competitive funds shall be submitted to the fire service training bureau on a form specified by the fire marshal.

*b.* Each lead agency may submit a completed application for allocated funds.

*c.* Any lead agency may submit a completed application for competitive funds. An application for competitive funds shall be submitted separately from an application from the same lead agency for allocated funds.

*d.* Each completed application shall be signed by an official of the lead agency authorized to enter into contracts on behalf of the lead agency and shall be signed by an official of each partner of the lead agency, each of whom shall be a person authorized to enter into contracts on behalf of the partner agency.

*e.* Each application shall be accompanied by at least two letters of support from public or private agencies employing emergency responders and located in the area to be served by the regional emergency response training center.

*f.* Each application shall include signed assurances stating that the lead agency, the partner agency or agencies, if any, and the regional emergency response training center shall comply with all federal and state laws applicable to the administration of any funds awarded, the planning, design, and construction of the regional emergency response training center, and the operation of the center after construction is completed.

*g.* All information required on the application shall be completed, and all attachments required by the fire marshal shall be submitted with the application. An application shall not be considered complete unless the application is in compliance with this paragraph.

*h.* The deadline for submission of each completed application for funding during a state fiscal year is September 15 of that fiscal year.

EXCEPTION: If funds remain available for distribution through the regional emergency response training center program after all applications received by the September 15 deadline have been processed, the state fire marshal may conduct an additional application process during the same fiscal year. If such an additional application process is conducted, an announcement of the availability of funds, specifying the deadline for receipt of applications and other instructions for applying for funds, shall be provided to all regional emergency response training centers and shall be published in the Iowa Administrative Bulletin.

**259.304(2)** *Initial applications.* The initial application received from a lead agency on behalf of a regional emergency response training center shall include the following information:

*a.* Proposed location of the regional emergency response training center.

*b.* Justification for the proposed location. The justification shall include descriptions of each of the following and explanations of how each was taken into account in the selection of the location:

(1) The availability and proximity of quality classroom space with adequate audiovisual support.

(2) The availability and adequate supply from area emergency response service entities of equipment which supports training.

(3) A site where limited, safe open burning would not be challenged or prohibited due to environmental issues or community concerns.

(4) Proximity to a medical facility.

(5) The availability of water mains, roadway, drainage, electrical service, and reasonably flat terrain.

(6) Accessibility to area fire departments.

*c.* List of training facilities needed for the regional emergency response training center to provide training to fire fighters and other emergency responders. If any needed facility already exists and is owned by the lead agency or a partner agency, this fact shall be identified. Funds allocated through the regional emergency response training center program may not be used to duplicate an existing facility owned by a lead agency or any of its partners. However, funds may be used to replace a facility which is obsolete or out of repair, provided that the facility being replaced will not be used for the same purpose as a new facility constructed with these funds.

**661—259.305(100B) Processing of submitted applications.**

**259.305(1)** All completed applications received shall be reviewed by the state fire service and emergency response council or by a subcommittee of the council appointed by the fire marshal in consultation with the chair of the council. The council or subcommittee shall recommend funding, partial funding, or denial of each application to the fire marshal.

**259.305(2)** After receiving the recommendations of the council or subcommittee, the fire marshal shall make a determination as to whether funding will be awarded in whole or in part for each application or whether the application will be denied. Each applicant shall be notified promptly of the disposition of the applicant's application. If the application is denied or partial funding is awarded, the applicant shall be informed as to the reasons for the denial or partial funding. Applications for funding shall be evaluated based on the criteria for funding included in Iowa Code section 100B.22, subsection 3, and any applicable criteria for establishing priority for the funding established by the general assembly. Competitive funding may not be used for facilities the primary purpose of which is to provide advanced training.

**259.305(3)** Appeals.

*a.* An applicant who is denied funding or whose application is funded in part may appeal this decision to the fire marshal. Such an appeal shall be treated as a contested case subject to the provisions of rules 661—10.301(17A) through 661—10.322(17A), except that the request for an appeal shall be filed with the Fire Marshal Division, Department of Public Safety Building, 215 East 7th Street, Des Moines, Iowa 50319, and wherever "commissioner" or "commissioner of public safety" appears, "state fire marshal" shall be substituted.

*b.* Prior to appealing a decision, the applicant may submit a revised application to the fire marshal. If an applicant intends to submit a revised application, the applicant shall so notify the fire marshal within the time frame established for filing an appeal. Upon receipt of a revised application, the fire marshal shall cause the revised application to be processed in accordance with subrules 259.305(1) and 259.305(2). If a revised application is denied or funded in part, the applicant may appeal in accordance with paragraph *"a"* of this subrule.

These rules are intended to implement Iowa Code chapter 100B as amended by 2007 Iowa Acts, House File 911.

[Filed emergency 7/31/02 after Notice 5/29/02—published 8/21/02, effective 8/1/02]
[Filed emergency 12/4/03—published 12/24/03, effective 1/1/04]
[Filed 12/14/04, Notice 7/7/04—published 1/5/05, effective 3/1/05]
[Filed emergency 6/28/06—published 7/19/06, effective 7/1/06]
[Filed emergency 6/27/07—published 8/1/07, effective 7/1/07]

CHAPTERS 260 to 274
Reserved

# CHAPTER 275
# CERTIFICATION OF AUTOMATIC FIRE EXTINGUISHING SYSTEM CONTRACTORS

**661—275.1(100C) Establishment of program.** There is established within the fire marshal division a fire extinguishing system contractors certification program. The program is established pursuant to Iowa Code chapter 100C.

**275.1(1)** *Certification required.* No person shall act as a fire extinguishing system contractor without being currently certified as a fire extinguishing system contractor by the fire marshal, except as provided in subrule 275.1(3).

**275.1(2)** *Endorsement.* The certification of each contractor shall carry an endorsement for one or more of the following:

*a.* Automatic sprinkler system layout;

*b.* Special hazards suppression systems;

*c.* Installation of preengineered dry chemical or wet agent fire suppression systems;

*d.* Installation of preengineered water-based fire suppression systems in one- and two-family dwellings;

*e.* Testing and inspection of water-based systems; or

*f.* Any combination thereof.

Any person acting as a fire extinguishing system contractor shall do so only in relation to systems covered by the endorsements on the contractor's certification.

**275.1(3)** *Length of certification.* Certification shall normally be for one year and shall expire on March 31 each year. A certification which is effective on a date other than April 1 shall be effective on the date on which the certification is issued and shall expire on the following March 31.

*a.* Certification between July 1, 2006, and October 1, 2006. A contractor may operate without certification between July 1, 2006, and September 30, 2006, as follows:

(1) Prior to August 15, 2006, the contractor may operate as a contractor only if the contractor intends to apply for certification by August 15, 2006; a contractor operating under this subparagraph may perform contracting work only within the scope of certification for which the contractor intends to apply.

(2) On or after August 15, 2006, and before October 1, 2006, the contractor may operate as a contractor subject to this chapter only if the contractor has applied for certification under this chapter. A contractor operating under this subparagraph may perform contracting work only within the scope of certification for which the contractor has applied.

*b.* Any certification for which application is made by August 15, 2006, and accepted, shall be effective retroactive to July 1, 2006, and appropriate fees shall be collected pursuant to rule 661—275.5(100C).

**275.1(4)** *Inquiries.* Inquires regarding the fire extinguishing system contractors certification program may be addressed to:

Fire Extinguishing System Contractors Certification Program
Fire Marshal Division
Iowa Department of Public Safety
401 S.W. 7th Street, Suite N
Des Moines, Iowa 50309

Inquiries may be addressed by electronic mail to fesccp@dps.state.ia.us, by telephone to (515)281-5821, or by facsimile to (515)242-6299.

**661—275.2(100C) Definitions.** The following definitions apply to rules 661—275.1(100C) through 661—275.7(100C):

*"Automatic fire extinguishing system"* means a system of devices and equipment that automatically detects a fire and discharges an approved fire extinguishing agent onto or in the area of a fire and includes automatic sprinkler systems, carbon dioxide extinguishing systems, deluge systems, automatic dry-chemical extinguishing systems, foam extinguishing systems, and halogenated extinguishing

systems, or other equivalent fire extinguishing technologies recognized by the fire extinguishing system contractors advisory board.

*"Automatic sprinkler system"* means an integrated fire protection sprinkler system usually activated by heat from a fire designed in accordance with fire protection engineering standards and includes a suitable water supply. The portion of the system above the ground is a network of specially sized or hydraulically designed piping installed in a structure or area, generally overhead, and to which automatic sprinklers are connected in a systematic pattern.

*"Carbon dioxide extinguishing system"* means a system supplying carbon dioxide from a pressurized vessel through fixed pipes and nozzles and includes a manual or automatic actuating mechanism.

*"Clean agent"* means an electrically nonconducting, volatile, or gaseous fire extinguishant that does not leave a residue upon evaporation.

*"Deluge system"* means a sprinkler system employing open sprinklers attached to a piping system connected to a water supply through a valve that is opened by the operation of a detection system installed in the same area as the sprinklers.

*"Dry chemical"* means a powder composed of very small particles, usually sodium bicarbonate-, potassium bicarbonate-, or ammonium phosphate-based, with added particulate material supplemented by special treatment to provide resistance to packing, resistance to moisture absorption (caking), and the proper flow capabilities.

*"Dry pipe sprinkler system"* means an extinguishing system employing automatic sprinklers that are attached to a piping system containing air or nitrogen under pressure, the release of which (as from the opening of a sprinkler) permits the water pressure to open a valve known as a dry pipe valve, which allows the water to flow into the piping system and out the opened sprinklers.

*"Fire extinguishing system contractor"* or *"contractor"* means a person engaging in or representing oneself to the public as engaging in the activity or business of layout, installation, repair, alteration, addition, maintenance, or maintenance inspection of automatic fire extinguishing systems in this state.

*"Foam extinguishing system"* means a special system discharging foam made from concentrates, either mechanically or chemically, over the area to be protected.

*"Halogenated extinguishing system"* means a fire extinguishing system using one or more atoms of an element from the halogen chemical series of fluorine, chlorine, bromine, and iodine.

*"Layout"* means drawings, calculations and component specifications to achieve the specified system design installation. "Layout" does not include design.

*"Listed"* means equipment, materials, or services included in a list published by a nationally recognized independent testing organization concerned with evaluation of products or services that maintains periodic inspection of production of listed equipment or materials or periodic evaluation of services and whose listing states that either the equipment, material, or service meets appropriate designated standards or has been tested and found suitable for a specified purpose.

*"Maintenance inspection"* means periodic inspection and certification completed by a fire extinguishing system contractor. For purposes of this chapter, "maintenance inspection" does not include an inspection completed by a local building official, fire inspector, or insurance inspector, when acting in an official capacity.

*"Preengineered dry chemical or wet agent fire suppression system"* means any system having predetermined flow rates, nozzle pressures and limited quantities of either agent. These systems have specific pipe sizes, maximum and minimum pipe lengths, flexible hose specifications, number of fittings and number and types of nozzles prescribed by a nationally recognized testing laboratory. The hazards against which these systems protect are specifically limited by the testing laboratory as to the type and size based upon actual fire tests. Limitations on hazards that can be protected against by these systems are contained in the manufacturer's installation manual, which is referenced as part of the listing.

*"Preengineered water-based system"* means a packaged, water-based sprinkler system including all components connected to a water supply and designed to be installed according to pretested limitations.

*"Responsible managing employee"* means an owner, partner, officer, or manager employed full-time by a fire extinguishing system contractor who is designated as a responsible managing employee for a fire

extinguishing system contractor and who meets the requirements for a responsible managing employee established in rule 661—275.3(100C).

*"Special hazards suppression system"* means a fire extinguishing system utilizing fire detection and control methods to release an extinguishing agent, other than water connected to a dedicated fire protection water supply.

*"Wet agent"* or *"wet chemical"* means an aqueous solution of organic or inorganic salts or a combination thereof that forms an extinguishing agent.

**661—275.3(100C) Responsible managing employee.** Each fire extinguishing system contractor shall designate a responsible managing employee and may designate one or more alternate responsible managing employees. A contractor may designate more than one responsible managing employee in order to satisfy the requirements for more than one endorsement as provided in subrule 275.1(2). If more than one responsible managing employee is designated, the contractor shall indicate for which responsible managing employee each designated alternate managing employee serves as an alternate.

**275.3(1)** The responsible managing employee or employees shall be designated in the application for certification; and, if a responsible managing employee is no longer acting in that role, the contractor shall so notify the fire marshal, in writing, within 30 calendar days, on a form designated by the fire marshal.

**275.3(2)** If a responsible managing employee is no longer acting in that role and the contractor has designated an alternate responsible managing employee, the alternate responsible managing employee shall become the responsible managing employee and the contractor shall so notify the fire marshal, in writing, within 30 calendar days of the date on which the preceding responsible managing employee ceased to act in that role. If the contractor has designated more than one alternate responsible managing employee, the notice to the fire marshal shall indicate which alternate responsible managing employee has assumed the position of responsible managing employee.

**275.3(3)** If a responsible managing employee designated by a fire extinguishing system contractor is no longer acting in the role of responsible managing employee and the contractor has not designated an alternate responsible managing employee, the contractor shall designate a new responsible managing employee and shall notify the fire marshal, in writing, of the designation within six months of the date on which the former responsible managing employee ceased to act in that capacity, on a form designated by the fire marshal. If the fire marshal has not been notified of the appointment of a new responsible managing employee within six months of the date on which a responsible managing employee ceased serving in that capacity, the fire marshal shall suspend the certification of the fire extinguishing system contractor.

**275.3(4)** A responsible managing employee or an alternate responsible managing employee shall meet one of the following requirements:

*a.* Current licensure as a professional engineer by the Iowa engineering and land surveying examining board, with competence in fire extinguishing system design.

*b.* Current certification by the National Institute for Certification in Engineering Technologies at level III or above in fire protection technology, for automatic sprinkler system layout, special hazards suppression systems, or both.

(1) Prior to April 1, 2008, a fire extinguishing system contractor may receive provisional certification if the person designated as the contractor's responsible managing employee has initiated procedures for obtaining certification by the National Institute for Certification in Engineering Technologies at level III in fire protection technology for automatic sprinkler system layout, special hazards suppression systems, or both, and has satisfactorily completed testing which is offered by a third party and has been approved by the fire marshal, for competency in fire protection technology for automatic sprinkler system layout, special hazards suppression systems, or both. The contractor shall provide the fire marshal with notification and documentation of the satisfactory completion of required third-party testing within 30 days after the date on which the contractor's provisional certification was initially issued.

After one year of provisional certification of the contractor, the responsible managing employee shall have current certification by the National Institute for Certification in Engineering Technologies at level II or above in fire protection technology for automatic sprinkler system layout, special hazards suppression systems, or both. Documentation that this requirement has been met shall be provided by the contractor to the fire marshal within 30 days after the one-year anniversary of the effective date of the initial provisional certification.

Provisional certification shall not be recognized on or after April 1, 2009.

(2) Reserved.

*c.* A contractor may install preengineered dry chemical or wet agent fire suppression systems, if the responsible managing employee meets the requirements specified in subparagraph (1). Until April 1, 2009, a contractor may install preengineered dry chemical or wet agent fire suppression systems, if the responsible managing employee meets the requirements specified in subparagraph (2), and the contractor has received provisional certification prior to April 1, 2008.

(1) Certification by the National Institute for Certification in Engineering Technologies at level II or above in fire protection technology, for special hazards suppression systems; certification by the National Association of Fire Equipment Distributors in preengineered kitchen fire suppression systems or preengineered industrial fire suppression systems; or satisfactory completion of an applicable training or testing program which has been approved by the fire marshal.

(2) On or prior to April 1, 2008, a contractor may receive provisional certification with endorsement for installation of preengineered dry chemical or wet agent systems if the responsible managing employee has completed training required by a manufacturer of at least one system which the contractor installs or maintains. A contractor who is applying for provisional certification on or after April 1, 2007, shall provide documentation to the fire marshal of such training. A contractor who has received provisional certification prior to April 1, 2007, shall, by April 1, 2007, provide documentation of either training required by a manufacturer of at least one system which the contractor installs or maintains or of the training described in subparagraph (1). If satisfactory documentation is provided of the training required in subparagraph (1), the provisional status of the certification shall be removed at no cost to the contractor.

Provisional certification shall not be recognized on or after April 1, 2009.

*d.* A contractor may install preengineered water-based systems in one- or two-family dwellings if the responsible managing employee meets the following requirements:

(1) Satisfactory completion of any training required by the manufacturer for the installation of any system the contractor installs; and

(2) Satisfactory completion of an applicable training or testing program which has been approved by the fire marshal.

Until April 1, 2008, a contractor may receive provisional certification if the responsible managing employee has satisfactorily completed training required by the manufacturer for the installation of each system which the contractor installs. The provisional certification shall not be recognized on or after April 1, 2009.

*e.* A contractor may inspect and test water-based fire extinguishing systems if the responsible managing employee has current certification from the National Institute for Certification in Engineering Technologies at level III in fire protection technology, inspection and testing of water-based systems.

(1) Prior to April 1, 2008, a contractor may receive provisional certification with an endorsement for inspection and testing of water-based fire extinguishing systems if the responsible managing employee has initiated procedures for obtaining certification from the National Institute for Certification in Engineering Technologies at level III in fire protection technology, inspection and testing of water-based systems. After one year of provisional certification with an endorsement for inspection and testing of water-based fire extinguishing systems, the responsible managing employee shall have certification from the National Institute for Certification in Engineering Technologies at level II in fire protection technology, inspection and testing of water-based systems.

Provisional certification shall not be recognized on or after April 1, 2009.

(2) Reserved.

**275.3(5)** In any case in which training or testing that is offered to satisfy the requirements of this rule is required to be approved by the fire marshal, such approval is required prior to acceptance of the training or testing to meet certification requirements. Approval by the fire marshal of any training or testing to meet these requirements may be sought by the individual, firm, or organization providing the testing or training or initiated by the fire marshal. Any individual, firm or organization seeking to obtain such approval may apply to the fire marshal. An application form for approval of a testing or training program may be obtained by contacting the fire extinguishing system contractors certification program as specified in subrule 275.1(4).

**275.3(6)** Work performed by a contractor subject to these rules shall be limited to areas of competence indicated by the specific certification or certifications or other training requirements met by the responsible managing employee.

**275.3(7)** Nothing in this rule shall be interpreted to conflict with or diminish any requirement for training or certification for anyone installing or servicing a fire extinguishing system or portable fire extinguisher set forth in any rule of the fire marshal or local fire ordinance or standard adopted by reference therein.

**661—275.4(100C) Certification requirements.** A fire extinguishing system contractor shall meet all of the following requirements in order to receive certification from the fire marshal and shall continue to meet all requirements throughout the period of certification. The contractor shall notify the fire marshal, in writing, on a form designated by the fire marshal, within 30 calendar days if the contractor fails to meet any requirement for certification.

**275.4(1)** The contractor shall designate one or more responsible managing employees as provided in rule 661—275.3(100C).

**275.4(2)** The contractor shall maintain general and complete operations liability insurance for the layout, installation, repair, alteration, addition, maintenance, and inspection of automatic fire extinguishing systems in the following amounts: $500,000 per person, $1,000,000 per occurrence, and $1,000,000 property damage.

*a.* The carrier of any insurance coverage maintained to meet this requirement shall notify the fire marshal 30 days prior to the effective date of cancellation or reduction of the coverage.

*b.* The contractor shall cease operation immediately if the insurance coverage required by this subrule is no longer in force and other insurance coverage meeting the requirements of this subrule is not in force. A contractor shall not initiate any installation of a fire extinguishing system which cannot reasonably be expected to be completed prior to the effective date of the cancellation of the insurance coverage required by this subrule and of which the contractor has received notice, unless new insurance coverage meeting the requirements of this subrule has been obtained and will be in force upon cancellation of the prior coverage.

**275.4(3)** The contractor shall maintain current registration as a contractor with the labor services division of the Iowa workforce development department in compliance with Iowa Code chapter 91C and 875—Chapter 150, Iowa Administrative Code.

EXCEPTION: A contractor shall not be required to maintain registration with the labor services division of the Iowa workforce development department if the contractor does not meet the definition of "contractor" for purposes of Iowa Code chapter 91C and 875—Chapter 150, Iowa Administrative Code.

**275.4(4)** The contractor shall maintain compliance with all other applicable provisions of law related to operation in the state of Iowa and of any political subdivision in which the contractor is performing work.

**661—275.5(100C) Application and fees.**

**275.5(1)** *Application.* Any contractor seeking certification as a fire extinguishing system contractor shall submit a completed application form to the fire marshal. The application shall be filed no later than 30 days prior to the date on which certification is required or on which an existing certification expires. An application form may be obtained from the fire marshal or from the Web site of the fire extinguishing system contractors certification program. The application form shall be submitted with all required

attachments and the required application fee established in subrule 275.5(2). An application shall not be considered complete unless all required information is submitted, including required attachments and fees, and shall not be processed until it is complete.

NOTE: The Web site for the fire extinguishing system contractors certification program is: http://www.dps.state.ia.us/fm/fesccp/index.shtml.

**275.5(2)** *Certification fee.* The certification fee shall be $500 per year. If an application is denied, all except $100 of the fee may be refunded if the applicant applies to the fire marshal for a refund. No refund of the certification fee shall be made if the certification is revoked or if the denial of the certification is based on the applicant's knowingly including false or misleading information on the application.

If an application for certification provides for more than one responsible managing employee pursuant to rule 661—275.3(100C), there shall be an additional fee of $50 for each responsible managing employee beyond the first. If an application for certification provides for more than one endorsement as provided in subrule 275.1(2), there shall be an additional fee of $50 for each endorsement beyond the first.

EXCEPTION: If a certification is effective after April 1 and no later than June 30, the certification fee shall be $500. The certification fee for a certification which becomes effective between July 1 and September 30 shall be $400. The certification fee for a certification which becomes effective between October 1 and December 31 shall be $300. The certification fee for a certification which becomes effective between January 1 and March 31 shall be $200. If an application for certification provides for more than one responsible managing employee pursuant to rule 661—275.3(100C), there shall be an additional fee of $50 for each responsible managing employee beyond the first. If an application for certification provides for more than one endorsement as provided in subrule 275.1(2), there shall be an additional fee of $50 for each endorsement beyond the first.

**275.5(3)** *Payment.* The certification fee shall be submitted by draft, check, or money order in the applicable amount payable to the Fire Extinguishing System Contractors Certification Program. If the application is denied, the certification fee less $100 shall be returned to the applicant, except as provided in subrule 275.5(2).

**275.5(4)** *Amended certification fee.* The fee for issuance of an amended certification is $100. The fee shall be submitted with the request for an amended certification. A contractor shall request and the fire marshal shall issue an amended certificate for any of the items listed in paragraphs *"a," "b,"* and *"c"*:

*a.* A change in the designation of a responsible managing employee;

*b.* A change in insurance coverage; or

*c.* A change in any other material information included in or with the initial or renewal application.

A change in the address of the business is a material change. However, if the request for an amended certificate is solely a change of business address, the address of the business to which the certificate being amended was sent is in an area subject to a disaster emergency proclamation issued by the governor pursuant to Iowa Code section 29C.6, and the relocation occurs as a result of flooding or storm damage or other conditions which form a basis for the issuance of the disaster emergency proclamation, the fee shall not apply, although an amended certificate shall be issued.

*d.* Other changes in the information required in the application form, including renewal of insurance coverage with a new expiration date, shall be reported to the fire marshal but shall not require issuance of an amended certification or payment of the amended certification fee.

**275.5(5)** *Attachments.* Required attachments to the application for certification include, but are not limited to, the following:

*a.* Documentation verifying that the contractor has in force the insurance coverage required by subrule 275.4(2). The documentation shall include an acknowledgment that the contractor's insurance coverage extends to any work performed by the contractor within the scope of certification pursuant to this chapter. The documentation may consist of a letter from the insurance carrier or a copy of the insurance certificate with an endorsement showing the required information.

*b.* Documentation verifying that the person designated as the responsible managing employee and any persons designated as alternate responsible managing employees have met the applicable certification requirements.

**661—275.6(100C) Complaints.** Complaints regarding the performance of any certified contractor, failure of a certified contractor to meet any of the requirements established in Iowa Code chapter 100C or this chapter or any other provision of law, or operation as a fire extinguishing system contractor without certification may be filed with the fire marshal. Complaints should be addressed as follows:

Fire Extinguishing System Contractors Certification Program
Fire Marshal Division
Iowa Department of Public Safety
401 S.W. 7th Street, Suite N
Des Moines, Iowa 50309

Complaints may be submitted by electronic mail to fesccp@dps.state.ia.us or by facsimile to (515)242-6299.

Complaints should be as specific as possible and shall clearly identify the contractor against whom the complaint is filed. A form which may be used to file complaints is available on the Web site of the fire extinguishing system contractors certification program. Complaints may be filed without using the complaint form provided, but shall be submitted in writing. A complaint may be submitted anonymously, but if the name and contact information of the complainant are provided, the complainant will be notified of the disposition of the complaint.

NOTE: The Web site for the fire extinguishing system contractors certification program is: http://www.dps.state.ia.us/fm/fesccp/index.shtml.

**661—275.7(100C) Denial, suspension, or revocation of certification; civil penalties; and appeals.** The fire marshal may deny, suspend or revoke the certification of a contractor, or assess a civil penalty to the contractor, if any provision of these rules or any other provision of law related to operation as a fire extinguishing system contractor is violated.

**275.7(1)** *Denial.* The fire marshal may deny an application for certification:

*a.* If the applicant makes a false statement on the application form or in any other submission of information required for certification. "False statement" means providing false information or failing to include material information, such as a previous criminal conviction or action taken by another jurisdiction, when requested on the application form or otherwise in the application process.

*b.* If the applicant fails to meet all of the requirements for certification established in this chapter.

*c.* If the applicant is currently barred for cause from acting as a fire extinguishing system contractor in another jurisdiction.

*d.* If an applicant has previously been barred for cause from operating in another jurisdiction as a fire extinguishing system contractor and if the basis of that action reflects upon the integrity of the applicant in operating as a fire extinguishing system contractor. If an applicant is found to have been previously barred for cause from operating as a fire extinguishing system contractor in another jurisdiction and is no longer barred from doing so, the fire marshal shall evaluate the record of that action with regard to the likelihood that the applicant would operate with integrity as a certified contractor. If an applicant is denied under this provision, the applicant shall be notified of the specific reasons for the denial.

*e.* If the applicant has been convicted of a crime which reflects upon the integrity of the applicant in operating as a fire extinguishing system contractor. If an applicant is found to have a criminal record, the fire marshal shall evaluate that record with regard to the likelihood that the applicant would operate with integrity as a certified contractor. If an applicant is denied under this provision, the applicant shall be notified of the specific reasons for the denial.

**275.7(2)** *Suspension.* A suspension of a certification may be imposed by the fire marshal for any violation of these rules or Iowa Code chapter 100C or for a failure to meet any legal requirement to operate as a fire extinguishing system contractor in this state. Failure to provide any notice to the fire

marshal as provided in these rules shall be grounds for suspension. An order of suspension shall specify the length of the suspension and shall specify that correction of all conditions which were a basis for the suspension is a condition of reinstatement of the certification even after the period of the suspension.

**275.7(3)** *Revocation.* A revocation is a termination of a certification. A certification may be revoked by the fire marshal for repeated violations or for a violation which creates an imminent danger to the safety or health of individuals protected by a fire extinguishing system incorrectly installed by a certified contractor or when information comes to the attention of the fire marshal which, if known to the fire marshal when the application was being considered, would have resulted in denial of the certification.

A new application for certification from a contractor whose certification had previously been revoked shall not be considered for a period of one year after the effective date of the revocation and, in any event, until every condition which was a basis for the revocation has been corrected. The fire marshal may specify in the revocation order a longer period than one year before a new application for certification may be considered. When a new application for certification from a contractor whose certification was previously revoked is being considered, the applicant may be denied certification based upon the same information which was the basis for revocation even after any such period established by the fire marshal has expired.

**275.7(4)** *Civil penalties.* The fire marshal may impose a civil penalty of up to $500 per day during which a violation has occurred and for every day until the violation is corrected. A civil penalty may be imposed in lieu of or in addition to a suspension or may be imposed in addition to a revocation. A civil penalty shall not be imposed in lieu of a revocation.

**275.7(5)** *Suspension or revocation for nonpayment of child support.* The following procedures shall apply to actions taken by the department on a certificate of noncompliance received from the Iowa department of human services pursuant to Iowa Code chapter 252J:

*a.* The notice required by Iowa Code section 252J.8 shall be served upon the certified contractor by restricted certified mail, return receipt requested, or personal service in accordance with Iowa Rule of Civil Procedure 1.305. Alternatively, the contractor may accept service personally or through authorized counsel.

*b.* The effective date of revocation or suspension of certification of a contractor, as specified in the notice required by Iowa Code section 252J.8, shall be 60 days following service upon the contractor.

*c.* Contractors shall keep the fire marshal informed of all court actions and all child support recovery unit actions taken under or in connection with Iowa Code chapter 252J and shall provide the fire marshal with copies, within 7 days of filing or issuance, of all applications filed with the district court pursuant to Iowa Code section 252J.9, all court orders entered in such actions, and withdrawals of certificates of noncompliance by the child support recovery unit.

*d.* All applicable fees for an application or reinstatement must be paid by the contractor before a certificate will be issued, renewed, or reinstated after the fire marshal has denied the issuance or renewal of a certification or has suspended or revoked a certification pursuant to Iowa Code chapter 252J.

*e.* In the event a contractor files a timely district court action following service of a notice pursuant to Iowa Code sections 252J.8 and 252J.9, the fire marshal shall continue with the intended action described in the notice upon the receipt of a court order lifting the stay, dismissing the action, or otherwise directing the department to proceed. For the purpose of determining the effective date of revocation or suspension of the certification, the department shall count the number of days before the action was filed and the number of days after the action was disposed of by the court.

*f.* Suspensions or revocations imposed pursuant to this subrule may not be appealed administratively within the department of public safety.

NOTE: The procedures established in subrule 275.7(5) implement the requirements of Iowa Code chapter 252J. The provisions of Iowa Code chapter 252J establish mandatory requirements for an agency which administers a certification program, such as the one established in this chapter, and provide that actions brought under these provisions are not subject to contested case procedures established in Iowa Code chapter 17A, but must be appealed directly to district court.

**275.7(6)** *Appeals.* Any denial, suspension, or revocation of a certification, or any civil penalty imposed upon a certified contractor under this rule, other than one imposed pursuant to subrule

275.7(5), may be appealed by the contractor within 14 days of receipt of the notice. Appeals of actions taken by the fire marshal under this rule shall be to the commissioner of public safety and shall be treated as contested cases, following the procedures established in rules 661—10.301(17A) through 661—10.332(17A).

These rules are intended to implement Iowa Code chapter 100C.

[Filed 5/5/06, Notice 3/29/06—published 5/24/06, effective 7/1/06]
[Filed emergency 9/20/06—published 10/11/06, effective 10/1/06]
[Filed emergency 3/22/07—published 4/11/07, effective 4/1/07]
[Filed emergency 6/30/08—published 7/30/08, effective 7/1/08]

CHAPTERS 276 to 290
Reserved

# CHAPTER 291
# VOLUNTEER EMERGENCY SERVICES PROVIDER DEATH BENEFITS

[Prior to 1/5/05, see 661—Ch 59]

**661—291.1(100B) Volunteer emergency services provider death benefit program.** There is established within the fire marshal division a volunteer emergency services provider death benefit program with responsibility for administering the payment of death benefits to beneficiaries of volunteer emergency services providers who die in the line of duty, as provided in Iowa Code section 100B.11.

Information about the program may be obtained by mail from the Volunteer Emergency Services Provider Death Benefit Program, Fire Marshal Division, Department of Public Safety, 401 S.W. 7th Street, Suite N, Des Moines, Iowa 50309, by telephone at (515)281-5821, or by electronic mail at fminfo@dps.state.ia.us.

**661—291.2(100B) Eligibility.** The beneficiary of a volunteer emergency services provider who is killed in the line of duty is eligible for a lump-sum payment of $100,000 from the volunteer emergency services provider death benefit program, provided that application is made to the program in accordance with requirements established in this chapter and all eligibility criteria are satisfied.

**291.2(1)** *Application.* Application forms for the volunteer emergency services provider death benefit program may be obtained on request from the fire marshal division. The fire marshal may accept a legible copy of a completed application for the federal Public Safety Officers' Benefits Program as an application for payment of benefits from the volunteer emergency services provider death benefit program. Completed application forms shall be mailed or delivered to the Volunteer Emergency Services Provider Death Benefit Program, Fire Marshal Division, Department of Public Safety, 401 S.W. 7th Street, Suite N, Des Moines, Iowa 50309. A completed application form shall be accompanied by a letter from the chief or other responsible supervisory official of the department in which the volunteer emergency services provider was serving at the time of the line-of-duty death, certifying that the death of the volunteer was the direct and proximate result of a traumatic personal injury incurred in the line of duty as a volunteer. Any evidence or proof available to the chief or responsible supervisory official to support the claim shall accompany the letter.

**291.2(2)** *Definitions.* The following definitions apply to the volunteer emergency services provider death benefit program.

*"Beneficiary"* means the surviving spouse of the volunteer emergency services provider who died in the line of duty. If there is no surviving spouse, and there is a surviving child or surviving children of the volunteer emergency services provider, then "beneficiary" means the surviving child of the member. If there is more than one surviving child, the children are cobeneficiaries who shall share equally in the lump-sum payment of the death benefit. If there is no surviving spouse or child of the volunteer emergency services provider, "beneficiary" means the surviving father or mother of the volunteer emergency services provider if either or both survives at the time of the line-of-duty death of the volunteer emergency services provider. If both the mother and father of the volunteer emergency services provider survive at the time of the line-of-duty death of the volunteer emergency services provider, then the father and mother are cobeneficiaries who shall share equally in the lump-sum payment. If there is no surviving spouse, child, or parent at the time of the line-of-duty death of the volunteer emergency services provider, then "beneficiary" means the estate of the deceased volunteer emergency services provider.

*"Line-of-duty death"* means the death of a volunteer emergency services provider which was the direct and proximate result of a traumatic personal injury incurred in the line of duty as a volunteer. The death is not a line-of-duty death if any of the following apply:

1. The death resulted from stress, strain, occupational illness, or a chronic, progressive, or congenital illness including, but not limited to, a disease of the heart, lungs, or respiratory system, unless a traumatic personal injury was a substantial contributing factor to the volunteer emergency services provider's death.

However, if the death was the direct and proximate result of a heart attack or stroke, the volunteer emergency services provider shall be presumed to have died as a result of a traumatic personal injury if the provider engaged in a nonroutine stressful or strenuous physical activity within the scope of the provider's duties and the death resulted while engaging in that activity, while still on duty after engaging in that activity, or not later than 24 hours after engaging in that activity, and the presumption is not overcome by competent medical evidence to the contrary. For purposes of this paragraph, "nonroutine stressful or strenuous physical activity" includes, but is not limited to, nonroutine stressful or strenuous physical law enforcement, fire suppression, rescue, hazardous material response, emergency medical services, prison security, disaster relief, emergency response, and training exercise activities. "Nonroutine stressful or strenuous physical activity" does not include activities of a clerical, administrative, or nonmanual nature.

2. The death was caused by the intentional misconduct of the volunteer emergency services provider or by such provider's intent to cause the provider's own death.

3. The volunteer emergency services provider was voluntarily intoxicated at the time of death.

4. The volunteer emergency services provider was performing the provider's duties in a grossly negligent manner at the time of death.

5. A beneficiary who would otherwise be entitled to a benefit under this chapter was, through the beneficiary's actions, a substantial contributing factor to the volunteer emergency services provider's death.

**661—291.3(100B) Determination.** After receiving an application for benefits from the volunteer emergency services provider death benefit program, the fire marshal shall make a determination as to whether or not the application meets the requirements for payment of benefits. The fire marshal may require the beneficiary or the chief or responsible supervisory official who has certified that the death is a line-of-duty death to submit any additional information that the fire marshal deems material to making the determination. If the determination is that the requirements for payment of benefits have been met, the fire marshal shall so notify the beneficiary or cobeneficiaries and shall request that the department of revenue issue a warrant payable to the beneficiary in the amount of the lump-sum payment provided or, if there are cobeneficiaries, that the department of revenue issue warrants in equal shares of the lump-sum amount payable to each of the cobeneficiaries.

**291.3(1)** *Denial and notification.* If the fire marshal determines that the eligibility criteria have not been met, the fire marshal shall notify in writing the beneficiary or cobeneficiaries and the chief or responsible supervisory official who certified that the death occurred in the line of duty of the determination and of the reason or reasons for the denial.

**291.3(2)** *Appeals.* If an application for payment from the volunteer emergency services provider program is denied, the beneficiary or any cobeneficiary may appeal that decision to the commissioner of public safety by filing an appeal in writing to the commissioner of public safety within 30 days of the date of the denial of the application by the fire marshal. Appeals shall be processed in accordance with contested case procedures specified in 661—Chapter 10.

These rules are intended to implement Iowa Code section 100B.11 as amended by 2004 Iowa Acts, chapter 1063.

[Filed emergency 6/22/00—published 7/12/00, effective 7/1/00]
[Filed 3/2/01, Notice 7/12/00—published 3/21/01, effective 5/1/01]
[Filed emergency 6/17/04—published 7/7/04, effective 7/1/04]
[Filed 12/14/04, Notice 7/7/04—published 1/5/05, effective 3/1/05]

CHAPTERS 292 to 299
Reserved

# CHAPTER 300
# STATE BUILDING CODE—ADMINISTRATION

[Prior to 12/21/05, see rules 661—16.1(103A) to 661—16.500(103A)]

**661—300.1(103A) State building code promulgated.** Iowa Code section 103A.7 assigns to the building code commissioner authority to promulgate the state building code, with the approval of the building code advisory council, except that adoption of the state historic building code requires the approval of the state historical society board of trustees, rather than the building code advisory council.

The state building code, as authorized by Iowa Code section 103A.7, includes 661—Chapters 16, 300, 301, 302, and 303. The state historic building code is set forth in 661—Chapter 350.

**661—300.2(103A) Building code commissioner.** The building code commissioner appointed by the commissioner of public safety pursuant to Iowa Code section 103A.4 shall serve as the chief of the building code bureau. The building code commissioner shall adopt, and amend as needed, the state building code, with the approval of the building code advisory council, and the state historic building code, with the approval of the state historical society board. The building code commissioner also shall appoint the board of review from among the council membership. The building code commissioner shall consider any request for the use of alternate materials or methods of construction submitted to the building code bureau pursuant to Iowa Code section 103A.13, and shall either disapprove each such request or shall recommend approval of the request to the building code advisory council.

**661—300.3(103A) Building code advisory council.** The building code advisory council appointed by the governor pursuant to Iowa Code section 103A.14 shall consider amendments to the state building code proposed by the building code commissioner, other than amendments to the state historic building code. The council shall approve or disapprove any changes to the state building code proposed by the building code commissioner. The council shall also consider and approve or disapprove any requests for use of alternate materials or methods of construction, the approval of which has been recommended to the council by the building code commissioner.

**661—300.4(103A) Plan reviews.**

**300.4(1)** *Plans and specifications review—approvals.*

*a.* Submissions to the building code commissioner of architectural technical documents, engineering documents, and plans and specifications are the responsibility of the owner of the building or facility, although the actual submission may be completed by an authorized agent of the owner or the responsible design professional.

*b.* "Responsible design professional" means a registered architect or licensed professional engineer who signs the documents submitted.

*c.* Plans, specifications and other supporting information shall be sufficiently clear and complete to show in detail that the proposed work will comply with the requirements of the applicable provisions of the state building code and with sections 106.1 and 106.1.1 of the International Building Code, 2006 edition.

*d.* In sections 106.1 and 106.1.1 of the International Building Code, 2006 edition, the word "permit" shall be replaced by the words "plan review."

*e.* Submittals to the commissioner shall be certified or stamped and signed as required by Iowa Code chapters 542B and 544A unless the applicant has certified on the submittal to the applicability of a specific exception under Iowa Code section 544A.18 and the submittal does not constitute the practice of professional engineering as defined by Iowa Code section 542B.2.

*f.* Plans and specifications for projects with a construction cost of $1 million or more or projects subject to inspection by the commissioner shall be submitted in an electronic format.

EXCEPTION: For projects with a construction cost of less than $1 million that are subject to inspection by the commissioner, two identical sets of plans and specifications may be submitted in lieu of electronic submittal.

NOTE: The electronic submission of plans and specifications for projects that are not subject to inspection by the commissioner and with a construction cost of less than $1 million is strongly encouraged but not required.

*g.* Any person planning to submit documents electronically shall contact the bureau for written instructions.

*h.* Architectural technical submissions, engineering documents, and plans and specifications for construction, renovation, or remodeling of all state-owned buildings or facilities, including additions to existing buildings, shall be submitted to the commissioner for review and comment. Subsequently, a written response by the design professional indicating corrective measures taken to address the commissioner's plan review comments shall be submitted to and approved by the commissioner prior to the issuance of construction documents for bidding. Bidding may commence on a project after the preliminary meeting provided for in subrule 300.4(3) if all items on the preliminary meeting checklist have been resolved to the satisfaction of the commissioner.

*i.* Architectural technical submissions, engineering documents, and plans and specifications for the initial construction of any building or facility that will not, when completed, be wholly owned by the state or an agency of the state shall be submitted to the commissioner for review and comment, if the construction is financed in whole or in part with funds appropriated by the state and there is no local building code in effect in the local jurisdiction in which the construction is planned or, if there is such a local building code in effect, it is not enforced through a system which includes both plan reviews and inspections. Subsequently, a written response by the design professional indicating corrective measures taken to address the commissioner's plan review comments shall be submitted to and approved by the commissioner prior to the issuance of construction documents for bidding. Bidding may commence on a project after the preliminary meeting provided for in subrule 300.4(3) if all items on the preliminary meeting checklist have been resolved to the satisfaction of the commissioner.

*j.* Architectural technical submissions, engineering documents, and plans and specifications for construction, renovation, or remodeling of all buildings or facilities, including additions to existing buildings, to which the state building code applies, other than those subject to paragraph *"h"* or *"i,"* shall be submitted to the commissioner for review and comment, unless applicability of the state building code is based upon a local ordinance enacted pursuant to Iowa Code section 103A.12. Subsequently, a written response by the design professional indicating corrective measures taken to address the commissioner's plan review comments shall be submitted to and approved by the commissioner prior to the issuance of construction documents for bidding. Bidding may commence on a project after the preliminary meeting provided for in subrule 300.4(3) if all items on the preliminary meeting checklist have been resolved to the satisfaction of the commissioner.

*k.* If the state building code applies to a construction project based upon a local ordinance adopting the state building code, the submission shall be made to the local jurisdiction, provided that the local jurisdiction has established a building department, unless the local jurisdiction requires submission to the commissioner. Review and approval of such documents by the commissioner shall be at the discretion of the commissioner based upon available resources.

*l.* No project for which a life cycle cost analysis is required to be completed pursuant to Iowa Code section 470.2 shall be approved for construction prior to receipt by the commissioner of the life cycle cost analysis, final approval of the life cycle cost analysis by the commissioner and the department of natural resources pursuant to Iowa Code section 470.7, and the completion of all applicable requirements established in Iowa Code section 470.7.

*m.* No project for which an energy review is required pursuant to subrule 303.1(3) shall be approved for construction prior to the receipt by the commissioner of the energy review.

NOTE: Compliance with the requirements of paragraphs *"l"* and *"m"* at the earliest practical time is strongly recommended. In no case shall the submission occur later than specified in the applicable statutory provisions and provisions of the state building code.

*n.* Any submission to the commissioner of architectural technical submissions, engineering documents, or plans and specifications for construction, except for plans to renovate or remodel

residential buildings of one or two units, shall include a statement that the construction will comply with all applicable energy conservation requirements.

**300.4(2)** *Copies and fees.* See 661—Chapters 16, 302, and 303 for fees pertaining to factory-built structures.

*a.* Copies of the state building code or any portion thereof are available through the Web site of the department of public safety.

NOTE: Codes and standards adopted by reference in the state building code which are published by other organizations, including, but not limited to, the American National Standards Institute, the International Code Council, the International Association of Plumbing and Mechanical Officials, and the National Fire Protection Association, may be purchased from the publishing organization. A copy of each code or standard adopted by reference in the state building code has been deposited in the Iowa state law library.

*b.* The fees for plan reviews completed by the building code bureau shall be calculated as follows:

| **Estimated Construction Costs** | **Calculation of Plan Review Fee** |
|---|---|
| Up to and including $1 million | $.58 per thousand dollars or fraction thereof (minimum fee $200) |
| More than $1 million | $580 for the first $1 million plus $.32 for each additional thousand dollars or fraction thereof |
| The plan review fees for fire suppression systems and fire alarm systems are separate fees and shall be calculated as follows: | |
| **Fire Protection System Costs** | **Plan Review Fee** |
| Fire suppression systems whose construction cost for materials and installation is calculated to be up to and including $5,000 | $100 |
| Fire suppression systems whose construction cost for materials and installation is calculated to be more than $5,000 and up to and including $20,000 | $200 |
| Fire suppression systems whose construction cost for materials and installation is estimated to be more than $20,000 | $400 |
| Fire alarm systems whose construction cost for materials and installation is calculated to be up to and including $5,000 | $100 |
| Fire alarm systems whose construction cost for materials and installation is calculated to be more than $5,000 and up to and including $20,000 | $200 |
| Fire alarm systems whose construction cost for materials and installation is estimated to be more than $20,000 | $400 |

Payment of the assigned fee shall accompany each plan when submitted for review. Payment shall be made by money order, check or draft made payable to the Treasurer, State of Iowa.

*c.* A person who has submitted a plan for review for which a fee has been assessed pursuant to paragraph *"b"* is eligible to receive a refund of the fee if the plan has not been approved or rejected within 60 calendar days of its receipt by the building code bureau. A person who believes that a refund is due shall notify the building code commissioner who shall provide a form to the person who submitted the plan for review to request a refund. If the request for refund is approved, the building code commissioner shall cause a check for the amount of the refund to be issued to the individual or organization that originally paid the fee. If the original submission of the plan is incomplete, the fee shall be refunded only if the plan has not been approved or rejected within 60 days of a full and complete submission of the plan. "Approved or rejected within 60 days" means that a letter approving or rejecting the plan has been presented or mailed to the submitter within 60 days of the date of receipt by the building code bureau, within the meaning of "time" as defined in Iowa Code section 4.1.

**300.4(3)** *Preliminary meeting.* The responsible design professional for a project shall schedule a preliminary meeting with the building code bureau to discuss code compliance issues early in the design development phase. The responsible design professional shall contact the bureau to schedule the preliminary meeting. There is no separate fee for a preliminary meeting. If the responsible design professional plans to request approval to bid the project as part of the preliminary meeting, the responsible design professional shall request a copy of the document "Preliminary Meeting Checklist" at the time the meeting is scheduled and shall be prepared to address all applicable issues identified on the checklist at the preliminary meeting. Approval to bid the project shall not be given unless all applicable issues identified on the checklist have been addressed to the satisfaction of the commissioner.

**300.4(4)** *Requests for staged approvals.*

*a.* Requests for approval to begin foundation work shall be submitted to the building code bureau in writing and may be transmitted by mail, E-mail or fax or in person. Foundation approval may be granted by the bureau in writing, following a preliminary meeting, if the construction plans and specifications are found to be in compliance with the requisite code provisions.

*b.* Requests for approval to continue construction beyond the foundation, up to and including the shell of the building, shall be submitted to the bureau in writing and may be transmitted by mail, E-mail or fax or in person. These requests will be evaluated on a case-by-case basis, and approval or denial of the requests will be transmitted to the submitter in a written form.

**300.4(5)** *Fast-track projects.* While fast-track projects are not encouraged, fast-track projects may be considered by the commissioner on a case-by-case basis. If a fast-track project is initially approved, a written plan of submittal, review and approval will be developed for each project. All projects approved for fast-track review must be submitted in an electronic format that is acceptable to the commissioner.

NOTE: Fast-track projects are not encouraged and will be approved only on the basis of good cause shown.

**661—300.5(103A) Inspections.**

**300.5(1)** Any building or facility for which construction is subject to a plan review by the commissioner, except construction involving any building or facility owned by the board of regents or by any institution subject to the authority of the board of regents, shall be subject to inspection by the commissioner or staff of the bureau or division at the direction of the commissioner or by a third party with whom the commissioner contracts to conduct inspections of buildings and facilities subject to the state building code.

**300.5(2)** Any construction involving any building or facility owned by the board of regents or by an institution subject to the authority of the board of regents shall be subject to inspection by the commissioner or staff of the bureau or division at the direction of the commissioner.

EXCEPTION: Construction which is limited to building additions, renovations or repairs shall not be subject to inspection by the commissioner.

**300.5(3)** Buildings subject to inspection by the state building code commissioner, except construction involving any building or facility owned by the board of regents or by any institution subject to the authority of the board of regents, shall pay an inspection fee based upon the construction cost of the project. The inspection fee shall be calculated as follows:

| Construction Cost | Base Inspection Fee |
|---|---|
| Up to $100,000 | $598 |
| $100,001 to $1,000,000 | $645 |
| $1,000,001 to $10,000,000 | $722 |
| $10,000,001 and above | $783 |
| Follow-up inspection | $214 |

The base inspection fee shall cover three inspections—a foundation, rough-in and final. The base inspection fee shall be due and payable at the time completed construction documents are submitted for review. The plan review will not be conducted until the proper base inspection fee is paid. Checks should

be made payable to the Treasurer, State of Iowa, and delivered to the bureau office. This fee is separate and distinct from the plan review fee established in subrule 300.4(2).

Additional inspections may occur for any of the following reasons:

*a.* During one of the three base inspections, code violations are identified that require that a follow-up inspection be conducted to verify that the violations have been corrected.

*b.* Upon arrival, the inspector finds that the project is not ready for the type of inspection requested.

*c.* By special request of the project designer, contractor or owner.

*d.* Upon order of the building code commissioner (no additional charge).

The fee for each additional inspection shall be calculated individually as follows:

One hour on site = $206

One to two hours on site = $240

Two to three hours on site = $273

Three to four hours on site = $307

Four to five hours on site = $341

Five to six hours on site = $374

Additional inspection fees will be billed to the responsible architect or building contractor on a monthly basis. The building may receive only temporary approval for occupancy if unpaid inspection fees remain at the time of final inspection.

Inspection fees and standard operating procedures for construction involving any building or facility owned by the board of regents or by any institution subject to the authority of the board of regents shall be established through a written agreement between the commissioner and the board of regents.

**300.5(4)** Any person who performs a building code inspection on behalf of the building code commissioner shall have and maintain one of the following: (1) current certification as a commercial building inspector by the International Code Council, or (2) other equivalent certification approved by the building code commissioner. An employee of the department who performs an inspection on behalf of the building code commissioner shall, in addition, meet any requirements for the job class in which the employee is classified as established by the department of administrative services, pursuant to Iowa Code chapter 8A, subchapter IV, part 2.

EXCEPTION: An employee of the department who performs inspections on behalf of the building code commissioner may perform such inspections for no more than six months prior to obtaining the required certification.

**661—300.6(103A) Local code enforcement.** Provisions of the state building code applicable statewide or applicable in a local jurisdiction which has adopted the state building code by local ordinance may be enforced by the local jurisdiction.

Any local jurisdiction which adopts the state building code by local ordinance may further adopt provisions for the administration and enforcement of the building code by the local jurisdiction. These provisions may include administrative provisions contained in the codes adopted by reference as part of the state building code and may include other provisions at the discretion of the local jurisdiction.

**300.6(1)** *Creation of department.* There may be established within the governmental subdivision a "building department" which shall be under the jurisdiction of the building official designated by the appointing authority. Within the state building code, including publications adopted by reference within the state building code, the terms "administrative authority," "authority having jurisdiction," and "authorized representative" shall mean the building official.

**300.6(2)** *Powers and duties of building official.* The building official in those governmental subdivisions establishing a building department shall enforce all the provisions of any applicable building code as prescribed by local law or ordinance and as outlined by Iowa Code section 103A.19.

**300.6(3)** *Permits only.* Any governmental subdivision that has not established a building department but requires a permit to construct or an occupancy permit or both shall be known as the "issuing authority."

**300.6(4)** *Statement of compliance with energy conservation requirements.* Any application for a building permit, except for applications to renovate or remodel residential buildings of one or two units,

shall include a statement that the construction will comply with all applicable energy conservation requirements.

These rules are intended to implement Iowa Code chapter 103A.

[Filed 12/2/05, Notice 9/14/05—published 12/21/05, effective 4/1/06]
[Filed 11/2/06, Notice 9/27/06—published 11/22/06, effective 1/1/07]
[Filed without Notice 11/2/06—published 11/22/06, effective 1/1/07]
[Filed 10/31/07, Notice 9/12/07—published 11/21/07, effective 1/1/08]
[Filed emergency 6/11/08—published 7/2/08, effective 6/15/08]

# CHAPTER 301
# STATE BUILDING CODE—GENERAL PROVISIONS

[Prior to 12/21/05, see rules 661—16.1(103A) to 661—16.500(103A)]

**661—301.1(103A) Scope and applicability.** The provisions of this chapter apply generally to:

1. Buildings and facilities owned by the state of Iowa;
2. The initial construction of any building or facility not wholly owned by the state of Iowa or any department or agency of the state of Iowa which is financed in whole or in part with funds appropriated by the state, if there is no local building code in effect in the jurisdiction in which the construction is located or if there is a local building code in effect in the jurisdiction, and the local building code is not enforced through a system of plan reviews and inspections;
3. Buildings and facilities subject to the state building code, pursuant to a provision of state or federal law other than Iowa Code chapter 103A; and
4. Buildings and facilities in local jurisdictions which have adopted the state building code by local ordinance in accordance with the provisions of Iowa Code section 103A.12.

**661—301.2(103A) Definitions.** The following definitions apply to 661—Chapters 300, 301, 302, and 303.

*"Appropriated by the state of Iowa"* means funds which are included in a bill enacted by the Iowa general assembly and signed by the governor or which are appropriated in a provision of the Iowa Code.

*"Board of appeals"* means the local board of appeals as created by local ordinance.

*"Board of review"* or *"board"* means the state building code board of review created by Iowa Code section 103A.15. The three members of the board of review are appointed by the building code commissioner from among the membership of the building code advisory council.

*"Building"* means a combination of materials, whether portable or fixed, to form a structure affording facilities or shelter for persons, animals or property. The word "building" includes any part of a building unless the context clearly requires a different meaning. This definition does not apply to 661—Chapter 302.

*"Building code advisory council"* or *"council"* means the seven-member council appointed by the governor, pursuant to Iowa Code section 103A.14, to advise and confer with the commissioner on matters relating to the state building code and to approve provisions of the state building code adopted by the commissioner.

*"Building component"* means any part, subsystem, subassembly, or other system designed for use in, or as a part of, a structure, including but not limited to: structural, electrical, mechanical, fire protection, or plumbing systems, and including such variations thereof as are specifically permitted by regulation, and which variations are submitted as part of the building system or amendment thereof.

*"Building department"* means an agency of any governmental subdivision charged with the administration, supervision, or enforcement of building regulations, prescribed or required by state or local building regulations.

*"Building system"* means plans, specifications and documentation for a system of manufactured factory-built structures or buildings or for a type or a system of building components, including but not limited to: structural, electrical, mechanical, fire protection, or plumbing systems, and including such variations thereof as are specifically permitted by regulation, and which variations are submitted as part of the building system or amendment thereof.

*"Bureau"* means the building code bureau of the fire marshal division of the department of public safety.

*"Commissioner"* means the state building code commissioner appointed by the commissioner of public safety pursuant to Iowa Code section 103A.4.

*"Construction"* means the construction, erection, reconstruction, alteration, conversion, repair, equipping of buildings, structures or facilities, and requirements or standards relating to or affecting materials used in connection therewith, including provisions for safety and sanitary conditions.

*"Construction cost"* means the total cost of the work to the owner of all elements of the project designed or specified by the design professional including the cost at current market rates of labor and materials furnished by the owner and equipment designed, specified or specifically provided by the design professional. Construction costs shall include the costs of management or supervision of construction or installation provided by a separate construction manager or contractor, plus a reasonable allowance for each construction manager's or contractor's overhead and profit.

*"Division"* means the fire marshal division of the department of public safety.

*"Enforcement authority"* means any state agency or political subdivision of the state that has the authority to enforce the state building code.

*"Equipment"* means plumbing, heating, electrical, ventilating, conditioning, refrigeration equipment, and other mechanical facilities or installations.

*"Governmental subdivision"* means any state, city, town, county or combination thereof.

*"Label"* means an approved device affixed to a factory- built structure or building, or building component, by an approved agency, evidencing code compliance.

*"Listing agency"* means an agency approved by the commissioner which is in the business of listing or labeling and which maintains a periodic inspection program on current production of listed models, and which makes available timely reports of such listing including specific information verifying that the product has been tested to approved standards and found acceptable for use in a specified manner.

*"State plumbing code"* means the state plumbing code adopted by the Iowa department of public health, pursuant to Iowa Code section 135.11, subsection 5.

NOTE: As of January 1, 2007, the state plumbing code is found in 641—Chapter 25.

*"Structure"* means that which is built or constructed, an edifice or building of any kind, or any piece of work artificially built up or composed of parts joined together in some definite manner except transmission and distribution equipment of public utilities. "Structure" includes any part of a structure unless the context clearly requires a different meaning.

**661—301.3(103A) General provisions.** The provisions of the International Building Code, 2006 edition, published by the International Code Council, 5203 Leesburg Pike, Suite 600, Falls Church, VA 22041, are hereby adopted by reference as the general requirements for building construction, with the following amendments:

Delete sections 101 through 115 except for sections 106.1, 106.1.1, and 106.1.1.1.

Add the following new section 1100:

1100. Any building or facility which is in compliance with the applicable requirements of 661—Chapter 302 shall be deemed to be in compliance with any applicable requirements contained in the International Building Code concerning accessibility for persons with disabilities.

Delete chapter 29.

Amend section 3001.2 by adding the following new unnumbered paragraph after the introductory paragraph:

Notwithstanding the references in Chapter 35 to editions of national standards adopted in this section, any editions of these standards adopted by the elevator safety board in 875—Chapter 72 are hereby adopted by reference. If a standard is adopted by reference in this section and there is no adoption by reference of the same standard in 875—Chapter 72, the adoption by reference in this section is of the edition identified in Chapter 35.

Amend section 3401.3 by deleting "International Private Sewage Disposal Code" and inserting in lieu thereof "567 Iowa Administrative Code Chapter 69."

Delete appendices A through K.

Delete all references to the "International Plumbing Code" and insert in lieu thereof "state plumbing code."

Delete all references to the "ICC Electrical Code" and insert in lieu thereof "National Electrical Code, 2005 edition."

**301.3(1)** *Hospitals and health care facilities.*

*a.* A hospital, as defined in rule 661—205.1(100), that is required to meet the provisions of the state building code shall be deemed to be in compliance with the fire safety requirements of the state building code if the hospital is in compliance with the provisions of rule 661—205.5(100). In any other case in which an applicable requirement of the Life Safety Code, 2000 edition, is inconsistent with an applicable requirement of the state building code, the hospital shall be deemed to be in compliance with the state building code requirement if the Life Safety Code requirement is met.

*b.* A nursing facility or hospice, as defined in rule 661—205.1(100), that is required to meet the provisions of the state building code shall be deemed to be in compliance with the fire safety requirements of the state building code if the nursing facility or hospice is in compliance with the provisions of rule 661—205.10(100). In any other case in which an applicable requirement of the Life Safety Code, 2000 edition, is inconsistent with an applicable requirement of the state building code, the nursing facility or hospice shall be deemed to be in compliance with the state building code requirement if the Life Safety Code requirement is met.

*c.* An intermediate care facility for the mentally retarded, as defined in rule 661—205.1(100), or intermediate care facility for persons with mental illness that is required to meet the provisions of the state building code shall be deemed to be in compliance with the fire safety requirements of the state building code if the intermediate care facility is in compliance with the provisions of rule 661—205.15(100). In any other case in which an applicable requirement of the Life Safety Code, 2000 edition, is inconsistent with an applicable requirement of the state building code, the intermediate care facility shall be deemed to be in compliance with the state building code requirement if the Life Safety Code requirement is met.

*d.* An ambulatory health care facility, as defined in rule 661—205.1(100), that is required to meet the provisions of the state building code shall be deemed to be in compliance with the fire safety requirements of the state building code if the ambulatory health care facility is in compliance with the provisions of rule 661—205.20(100). In any other case in which an applicable requirement of the Life Safety Code, 2000 edition, is inconsistent with an applicable requirement of the state building code, the ambulatory health care facility shall be deemed to be in compliance with the state building code requirement if the Life Safety Code requirement is met.

*e.* A religious nonmedical health care institution that is required to meet the provisions of the state building code shall be deemed to be in compliance with the provisions of the state building code if the institution is in compliance with the provisions of rule 661—205.25(100). In any other case in which an applicable requirement of the Life Safety Code, 2000 edition, is inconsistent with an applicable requirement of the state building code, the religious nonmedical health care institution shall be deemed to be in compliance with the state building code requirement if the Life Safety Code requirement is met.

**301.3(2)** Reserved.

**661—301.4(103A) Mechanical requirements.** The provisions of the International Mechanical Code, 2006 edition, published by the International Code Council, 5203 Leesburg Pike, Suite 600, Falls Church, VA 22041, are hereby adopted by reference as the requirements for the design, installation, maintenance, alteration, and inspection of mechanical systems that are permanently installed and utilized to provide control of environmental conditions and related processes within buildings, with the following amendments:

Delete chapter 1.

Delete section 403 and insert in lieu thereof the following new section:

SECTION 403

MECHANICAL VENTILATION

Mechanical ventilation systems shall be designed in accordance with the provisions of ASHRAE Standard 62.1-2004, "Ventilation for Acceptable Indoor Air Quality," published by the American Society of Heating, Refrigerating and Air-Conditioning Engineers, 1791 Tullie Circle, N.E., Atlanta, GA 30329.

Delete appendices A and B.

Delete all references to the "International Plumbing Code" and insert in lieu thereof "state plumbing code."

Delete all references to the "ICC Electrical Code" and insert in lieu thereof "National Electrical Code, 2005 edition."

**661—301.5(103A) Electrical requirements.** The provisions of the National Electrical Code, 2005 edition, published by the National Fire Protection Association, 1 Batterymarch Park, Quincy, MA 02169-7471, are hereby adopted by reference as the requirements for electrical installations, with the following amendments:

Delete appendices A through G.

Delete all references to the "International Plumbing Code" and insert in lieu thereof "state plumbing code."

**661—301.6(103A) Plumbing requirements.** Provisions of the state plumbing code, 641—Chapter 25, adopted by the Iowa department of public health pursuant to Iowa Code chapter 135, apply to plumbing installations in cities or which are connected to municipal water systems or municipal wastewater treatment systems.

Private sewage disposal systems shall comply with 567—Chapter 69.

**301.6(1)** Plumbing installations which are not subject to the state plumbing code, 641—Chapter 25, and which are in buildings or facilities subject to the state building code shall comply either with the state plumbing code or with the International Plumbing Code, 2006 edition, published by the International Code Council, 5203 Leesburg Pike, Suite 600, Falls Church, VA 22041, except that any assembly occupancy, restaurant, pub or lounge constructed on or after January 1, 1991, shall comply with the provisions of subrule 301.6(2) regarding the provision of minimum plumbing facilities.

If the International Plumbing Code, 2006 edition, is used, section 708.3.3 is deleted and the following new section is inserted in lieu thereof:

708.3.3 Changes of direction. Cleanouts shall be installed at each fitting with a change of direction greater than 45 degrees (0.79 rad) in the building sewer, building drain and horizontal waste or soil lines. Where more than one change of direction occurs in a run of piping, only one cleanout shall be required for each 40 feet (12 192 mm) of developed length of the drainage piping.

**301.6(2)** Places of public assembly, restaurants, pubs and lounges constructed on or after January 1, 1991, shall provide at least the numbers of plumbing facilities required in the Uniform Plumbing Code, 2000 edition, Table 4-1, published by the International Association of Plumbing and Mechanical Officials, 5001 E. Philadelphia St., Ontario, CA 91761. Additions to, or adding seating capacity in, these types of occupancies shall require the installation of additional fixtures based upon the added number of occupants unless it can be shown that the existing facilities comply for the total number of occupants including the additional occupants.

All water closets installed pursuant to this subrule shall be water-efficient water closets complying with requirements of the U.S. Department of Energy.

This subrule is intended to implement Iowa Code section 104B.1.

**301.6(3)** Fuel gas piping shall comply with the requirements established in 661—Chapter 51.

**661—301.7(103A) Existing buildings.**

**301.7(1)** *Definition.* "Existing building" means a building erected prior to January 1, 2007, or for which plans have received approval from the building code bureau of the fire marshal division of the department of public safety prior to January 1, 2007.

**301.7(2)** *Adoption.* The provisions of the International Existing Building Code, 2006 edition, published by the International Code Council, 5203 Leesburg Pike, Suite 600, Falls Church, VA 22041, are hereby adopted by reference as the requirements for repair, alteration, change of occupancy, addition, and relocation of existing buildings, with the following amendments:

Delete chapter 1.

Delete section 605.

Delete section 806.

Delete section 912.8.

Delete chapters A1 through A5.

Adopt appendix B, with the following amendments:

Delete section B101 and insert in lieu thereof the following new section:

Any building or facility subject to this rule shall comply with the provisions of 661—Chapter 302.

Delete sections B102, B103, and B104.

Delete resource A.

Delete all references to the "International Plumbing Code" and insert in lieu thereof "state plumbing code."

Delete all references to the "ICC Electrical Code" and insert in lieu thereof "National Electrical Code, 2005 edition."

**661—301.8(103A) Residential construction requirements.** The provisions of the International Residential Code, 2006 edition, published by the International Code Council, 5203 Leesburg Pike, Suite 600, Falls Church, VA 22041, are hereby adopted by reference as the requirements for construction, alteration, movement, enlargement, replacement, repair, equipment, use and occupancy, location, removal, and demolition of detached one- and two-family dwellings and multiple single-family dwellings (townhouses) not more than three stories in height with a separate means of egress and their accessory structures, with the following amendments:

Delete chapters 1 and 11.

Delete all references to the "International Plumbing Code" and insert in lieu thereof "state plumbing code."

Delete section R310.1 and insert in lieu thereof the following new section:

R310.1 Emergency escape and rescue required. Basements and every sleeping room shall have at least one operable emergency and rescue opening. Such opening shall open directly into a public street, public alley, yard or court. Where basements contain one or more sleeping rooms, emergency egress and rescue openings shall be required in each sleeping room, but shall not be required in adjoining areas of the basement. Where emergency escape and rescue openings are provided they shall have a sill height of not more than 44 inches (1118 mm) above an adjacent permanent interior standing surface. The adjacent permanent interior standing surface shall be no less than 36 inches wide and 18 inches deep and no more than 24 inches high. Where a door opening having a threshold below the adjacent ground elevation serves as an emergency escape and rescue opening and is provided with a bulkhead enclosure, the bulkhead enclosure shall comply with section R310.3. The net clear opening dimensions required by this section shall be obtained by the normal operation of the emergency escape and rescue opening from the inside. Emergency escape and rescue openings with a finished sill height below the adjacent ground elevation shall be provided with a window well in accordance with section R310.2. Emergency escape and rescue openings shall open directly into a public way, or to a yard or court that opens to a public way.

EXCEPTION: Basements used only to house mechanical equipment and not exceeding total floor area of 200 square feet (18.58 $m^2$).

Amend section R324.1.6 by striking the words "Chapter 3 of the International Private Sewage Disposal Code" and inserting in lieu thereof "567 Iowa Administrative Code Chapter 69."

Add the following new sections:

P2500. Chapter 25 shall not apply to construction of a residence if the residence is within the boundaries of an incorporated municipality or if the plumbing in the residence is connected to a municipal water system or a municipal wastewater treatment system.

P2600. Chapter 26 shall not apply to construction of a residence if the residence is within the boundaries of an incorporated municipality or if the plumbing in the residence is connected to a municipal water system or a municipal wastewater treatment system.

P2700. Chapter 27 shall not apply to construction of a residence if the residence is within the boundaries of an incorporated municipality or if the plumbing in the residence is connected to a municipal water system or a municipal wastewater treatment system.

P2800. Chapter 28 shall not apply to construction of a residence if the residence is within the boundaries of an incorporated municipality or if the plumbing in the residence is connected to a municipal water system or a municipal wastewater treatment system.

P2900. Chapter 29 shall not apply to construction of a residence if the residence is within the boundaries of an incorporated municipality or if the plumbing in the residence is connected to a municipal water system or a municipal wastewater treatment system.

P3000. Chapter 30 shall not apply to construction of a residence if the residence is within the boundaries of an incorporated municipality or if the plumbing in the residence is connected to a municipal water system or a municipal wastewater treatment system.

P3100. Chapter 31 shall not apply to construction of a residence if the residence is within the boundaries of an incorporated municipality or if the plumbing in the residence is connected to a municipal water system or a municipal wastewater treatment system.

P3200. Chapter 32 shall not apply to construction of a residence if the residence is within the boundaries of an incorporated municipality or if the plumbing in the residence is connected to a municipal water system or a municipal wastewater treatment system.

Delete appendices A through Q.

These rules are intended to implement Iowa Code chapter 103A.

[Filed 12/2/05, Notice 9/14/05—published 12/21/05, effective 4/1/06]
[Filed 11/2/06, Notice 9/27/06—published 11/22/06, effective 1/1/07]
[Filed 10/31/07, Notice 9/12/07—published 11/21/07, effective 1/1/08]

# CHAPTER 302
# STATE BUILDING CODE—ACCESSIBILITY OF BUILDINGS AND FACILITIES AVAILABLE TO THE PUBLIC

[Prior to 12/21/05, see rules 661—16.700(103A,104A) to 661—16.720(103A,104A)]

**661—302.1(103A,104A) Purpose and scope.** Rules 661—302.1(103A,104A) through 661—302.20(103A,104A) are intended to ensure that buildings and facilities used by the public are accessible to, and functional for, persons with disabilities. Rules 661—302.1(103A,104A) through 661—302.11(103A,104A) apply statewide to new construction, renovation, and rehabilitation projects on existing buildings and facilities when local or state building codes require compliance with standards for new construction.

Some requirements contained in rules 661—302.1(103A,104A) through 661—302.11(103A,104A) are not readily enforceable through the plan review process and may not be enforced through this means. Any of the requirements may be enforced during inspections in jurisdictions which inspect construction projects for compliance with building code requirements. Owners and operators of buildings and facilities subject to the provisions of rules 661—302.1(103A,104A) through 661—302.11(103A,104A) are responsible for compliance with any applicable requirements contained within these rules regardless of whether those requirements are enforced through plan reviews or inspections.

Rules 661—302.2(103A,104A) through 661—302.11(103A,104A) are based upon the federal Americans with Disabilities Act Accessibility Guidelines (ADAAG) and in many instances adopt the language of ADAAG by reference. However, state and local building officials charged with enforcement of rules 661—302.2(103A,104A) through 661—302.11(103A,104A) are unable to warrant the acceptance of any interpretation of ADAAG language by federal agencies or any other state. A state or local official's decision to approve a building plan under rules 661—302.2(103A,104A) through 661—302.11(103A,104A) does not prevent the federal government or another state from making a different decision under ADAAG or other applicable law, notwithstanding any similarities among such laws.

NOTE A: See rule 661—302.20(103A,104A) for specific requirements within the individual dwelling units and public and common use spaces of multiple dwelling unit buildings.

NOTE B: Other federal and state laws address requirements for accessibility for persons with disabilities and may be applicable to buildings and facilities subject to rules 661—302.1(103A,104A) through 661—302.20(103A, 104A). Nothing in these rules should be interpreted as limiting the applicability of other provisions of state or federal law. These provisions include, but are not limited to, the following:

1. Iowa Code chapter 216, the Iowa Civil Rights Act of 1965.
2. Iowa Code chapter 216C, which enumerates the rights of persons who are blind or partially blind and persons with physical disabilities.
3. Iowa Code chapter 321L and 661—Chapter 18, which relate to requirements for parking for persons with disabilities.
4. The federal Architectural Barriers Act of 1968 (Public Law 90-480).
5. The federal Rehabilitation Act of 1973 (Public Law 93-112).
6. The federal Fair Housing Act of 1968 (Public Law 90-284), the federal Fair Housing Amendments Act of 1988 (Public Law 100-430), and related regulations, including 24 CFR 100, Subpart D.

**661—302.2(103A,104A) Definitions.** The following definitions are adopted for purposes of rules 661—302.1(103A,104A) through 661—302.20(103A,104A).

NOTE: Many of these definitions have been taken from or adapted from ADAAG.

*"Access aisle"* means an accessible pedestrian space between elements, such as parking spaces, seating, and desks, which provides clearances appropriate for use of the elements.

*"Accessible"* describes a site, building, facility, or portion thereof that complies with rules 661—302.1(103A,104A) through 661—302.20(103A,104A).

*"Accessible element"* means an element specified by and which complies with rules 661—302.1(103A,104A) through 661—302.20(103A,104A).

*"Accessible route"* means a continuous unobstructed path connecting all accessible elements and spaces of a building or facility. Interior accessible routes may include corridors, floors, ramps, elevators, lifts, and clear floor space at fixtures. Exterior accessible routes may include parking access aisles, curb ramps, crosswalks at vehicular ways, walks, ramps, and lifts.

*"Accessible space"* means space that complies with rules 661—302.1(103A,104A) through 661—302.20(103A,104A).

*"ADA"* means the federal Americans with Disabilities Act, Public Law 101-336.

*"ADAAG"* means Americans with Disabilities Act Accessibility Guidelines for Buildings and Facilities, 28 CFR Part 36, Appendix A, as revised through July 1, 1994. Persons wishing to obtain copies of ADAAG may access the following Web site: www.adaproject.org/Publications.html for a downloadable copy.

*"Adaptability"* means the ability of certain building spaces and elements, such as kitchen counters, sinks, and grab bars, to be added or altered so as to accommodate the needs of individuals with or without disabilities or to accommodate the needs of persons with different types or degrees of disability.

*"Addition"* means an expansion, extension, or increase in the gross floor area of a building or facility.

*"Administrative authority"* means the governmental agency that adopts or enforces regulations and guidelines for the design, construction, or alteration of buildings and facilities.

*"Alteration"* means a change to a building or facility that affects or could affect the usability of the building or facility or part thereof. Alterations include, but are not limited to, remodeling, renovation, rehabilitation, reconstruction, historic restoration, resurfacing of circulation paths or vehicular ways, changes in or rearrangement of the structural parts of elements, and changes in or rearrangement of the plan configuration of walls and full-height partitions. Normal maintenance, reroofing, painting or wallpapering, or changes to mechanical and electrical systems, are not alterations unless they affect the usability of the building or facility.

*"Area of rescue assistance"* means an area, which has direct access to an exit, where people who are unable to use stairs may remain temporarily in safety to await further instructions or assistance during emergency evacuation.

*"Assembly area"* means a room or space accommodating a group of individuals for recreational, educational, political, social, civic, or amusement purposes, or for the consumption of food and drink.

*"Automatic door"* means a door equipped with a power-operated mechanism and controls that open and close the door automatically upon receipt of a momentary actuating signal. The switch that begins the automatic cycle may be a photoelectric device, floor mat, or manual switch. See "power-assisted door."

*"Building"* means any structure used and intended for supporting or sheltering any use or occupancy.

*"Circulation path"* means an exterior or interior way of passage from one place to another for pedestrians including, but not limited to, walks, hallways, courtyards, stairways, and stair landings.

*"Clear"* means unobstructed.

*"Clear floor space"* means the minimum unobstructed floor or ground space required to accommodate a single, stationary wheelchair and occupant.

*"Closed circuit telephone"* means a telephone with dedicated line(s) such as a house telephone, courtesy telephone or telephone that must be used to gain entrance to a facility.

*"Common use"* refers to those interior and exterior rooms, spaces, or elements that are made available for the use of a restricted group of people (for example, occupants of a homeless shelter, the occupants of an office building, or the guests of such occupants).

*"Cross slope"* means the slope that is perpendicular to the direction of travel. See "running slope."

*"Curb ramp"* means a short ramp cutting through a curb or built up to it.

*"Detectable warning"* means a standardized surface feature built in or applied to walking surfaces or other elements to warn visually impaired people of hazards on a circulation path.

*"Educational occupancy"* means any building primarily used to deliver instruction in a classroom setting to students enrolled in primary or secondary schools or postsecondary institutions.

*"Egress, means of"* refers to a continuous and unobstructed way of exit travel from any point in a building or facility to a public way. A means of egress comprises vertical and horizontal travel and may include intervening room spaces, doorways, hallways, corridors, passageways, balconies, ramps, stairs, enclosures, lobbies, horizontal exits, courts and yards. An accessible means of egress is one that complies with rules 661—302.1(103A,104A) through 661—302.20(103A,104A) and does not include stairs, steps, or escalators. Areas of rescue assistance or evacuation elevators may be included as part of accessible means of egress.

*"Element"* means an architectural or mechanical component of a building, facility, space, or site. Examples of elements include, but are not limited to, telephones, curb ramps, doors, drinking fountains, seating, or water closets.

*"Entrance"* means any access point to a building or portion of a building or facility used for the purpose of entering. An entrance includes the approach walk, the vertical access leading to the entrance platform, the entrance platform itself, vestibules if provided, the entry door(s) or gate(s), and the hardware of the entry door(s) or gate(s).

*"Equivalent facilitation"* means the use of alternative designs and technologies which provide for substantially greater or equivalent access to and usability of a facility than is provided by technologies and designs which comply with the requirements of rules 661—302.1(103A,104A) through 661—302.20(103A,104A). Departures from particular technical and scoping requirements of rules 661—302.1(103A,104A) through 661—302.20(103A,104A) are permitted where the alternative designs and technologies used will provide equivalent facilitation.

*"Facility"* means all or any portion of buildings, structures, site improvements, complexes, equipment, roads, walks, passageways, parking lots, or other real or personal property located on a site.

*"Government facility"* means a structure accessible to the public which is owned or used by the state of Iowa or a political subdivision.

*"Ground floor"* means any occupiable floor less than one story above or below grade with direct access to grade. A building or facility always has at least one ground floor and may have more than one ground floor as where a split-level entrance has been provided or where a building is built into a hillside.

*"Marked crossing"* means a crosswalk or other identified path intended for use by pedestrians in crossing a vehicular way.

*"Mezzanine"* or *"mezzanine floor"* means that portion of a story which is an intermediate floor level placed within the story and having occupiable space above and below its floor.

*"Multifamily dwelling"* or *"multiple dwelling unit building"* means an apartment building containing four or more dwelling units. Rule 661—302.20(103A,104A) establishes accessibility requirements for multifamily dwellings of four or more units.

*"Occupiable"* describes a room or enclosed space designed for human occupancy in which individuals congregate for amusement, educational or similar purposes, or in which occupants are engaged at labor, and which is equipped with means of egress, light, and ventilation.

*"Operable part"* means a part of a piece of equipment or appliance used to insert or withdraw objects, or to activate, deactivate, or adjust the equipment or appliance (for example, coin slot, push button, handle).

*"Power-assisted door"* means a door used for human passage with a mechanism that helps to open the door, or relieves the opening resistance of a door, upon the activation of a switch or a continued force applied to the door itself.

*"Private facility"* means a place of public accommodation or commercial facility which is not owned or used by the state of Iowa or a political subdivision and which is subject to Title III of the ADA and 28 CFR Part 36 or which is a transportation facility subject to Title III of the ADA and 49 CFR 37.45.

*"Public facility"* means a facility or portion of a facility constructed by, on behalf of, or for the use of a public entity subject to Title II of the ADA and 28 CFR Part 35 or to Title II of the ADA and to either 49 CFR 37.41 or 49 CFR 37.43.

*"Public use"* describes interior or exterior rooms or spaces that are made available to the general public. Public use may be provided at a building or facility that is privately or publicly owned.

*"Ramp"* means a walking surface which has a running slope greater than 1:20.

*"Running slope"* means the slope that is parallel to the direction of travel. See "cross slope."

*"Service entrance"* means an entrance intended primarily for delivery of goods or services.

*"Signage"* means displayed verbal, symbolic, tactile, and pictorial information.

*"Site"* means a parcel of land bounded by a property line or a designated portion of a public right-of-way.

*"Site improvement"* means landscaping, paving for pedestrian and vehicular ways, outdoor lighting, recreational facilities, and the like, added to a site.

*"Sleeping accommodations"* means rooms whose primary use is for people to sleep including, but not limited to, dormitory and hotel or motel guest rooms or suites.

*"Space"* means an identifiable area. Examples of spaces include, but are not limited to, rooms, toilet rooms, halls, assembly areas, entrances, storage rooms, alcoves, courtyards, and lobbies.

*"Story"* means that portion of a building included between the upper surface of a floor and upper surface of the floor or roof next above. If such portion of a building does not include occupiable space, it is not considered a story for purposes of rules 661—302.1(103A,104A) through 661—302.20(103A,104A). There may be more than one floor level within a story as in the case of a mezzanine or mezzanines.

*"Structural frame"* means columns and the girders, beams, trusses and spandrels having direct connections to the columns and all other members which are essential to the stability of the building as a whole.

*"Tactile"* describes an object that can be perceived using the sense of touch.

*"TDD"* means a telecommunication device for the deaf. See "text telephone (TTT)."

*"Technically infeasible"* means, with respect to an alteration of a building or a facility, that the alteration has little likelihood of being accomplished because existing structural conditions would require removing or altering a load-bearing member which is an essential part of the structural frame; or because other existing physical or site constraints prohibit modification or addition of elements, spaces, or features which are in full and strict compliance with the minimum requirements for new construction and which are necessary to provide accessibility.

*"Text telephone (TTT)"* means machinery or equipment that employs interactive text-based communications through the transmission of coded signals across the standard telephone network. Text telephones include devices known as TDDs (telecommunication display devices or telecommunication devices for deaf persons) or computers with special modems. Text telephones are also called TTYs, an abbreviation for teletypewriter.

*"Transient lodging"* means a building, facility, or portion thereof, excluding inpatient medical care facilities and residential facilities, that contains sleeping accommodations. Transient lodging may include, but is not limited to, resorts, group homes, hotels, motels, and dormitories.

*"Vehicular way"* means a route intended for vehicular traffic, such as a street, driveway, or parking lot.

*"Walk"* means an exterior pathway with a prepared surface intended for pedestrian use, including general pedestrian areas such as plazas and courts.

**661—302.3(103A,104A) Plan review procedures.** Prior to the commencement of construction of a facility which is required to comply with rules 661—302.1(103A,104A) through 661—302.20(103A,104A), the owner of the property, or a contractor, architect, or other design professional authorized to do so by law, acting on behalf of the owner of the property, shall submit an application for approval of the construction plans. The application shall be on a form required by the building code commissioner and shall be submitted to the local building authority, if there is one. If there is no local building authority, the application shall be submitted to the building code bureau. The application shall be accompanied by a copy of the construction plans and payment of the applicable fee.

**661—302.4(103A,104A) Site development.**

**302.4(1)** *Development.* Proper attention to site development in the early stages of design is the most practical and economical way of making a site accessible and providing accessible entrances to buildings.

The siting of facilities, grading, parking, and the routes of walks shall provide convenience, safety and unrestricted circulation of persons with disabilities and their vehicles.

**302.4(2)** *Grading.* The site shall be graded, even contrary to existing topography, so that it attains a level with all primary entrances, making the building or facility accessible to persons with physical disabilities.

**302.4(3)** *Accessible routes.* ADAAG section 4.3 is adopted by reference as the requirements for accessible routes in and around facilities required to comply with rules 661—302.1(103A,104A) through 661—302.20(103A,104A).

**302.4(4)** *Parking and passenger loading zones.* Parking spaces, parking lots and passenger loading zones shall comply with 661—Chapter 18.

**661—302.5(103A,104A) Building elements and spaces accessible to the physically handicapped.** ADAAG chapter 4 is adopted by reference as the requirements for accessible building elements and spaces for buildings and facilities required to comply with rules 661—302.1(103A,104A) through 661—302.20(103A,104A), with the following amendments:

Delete section 4.3.

NOTE: ADAAG section 4.3 is adopted by reference in subrule 302.4(3).

Delete section 4.34.

**661—302.6(103A,104A) Restaurants and cafeterias.** ADAAG chapter 5 is adopted by reference as the accessibility requirements for restaurants and cafeterias.

**661—302.7(103A,104A) Medical care facilities.** ADAAG chapter 6 is adopted by reference as the accessibility requirements for medical care facilities which are required to comply with rules 661—302.1(103A,104A) through 661—302.20(103A,104A) with the following amendments:

Delete section 6.1, subsection (1), and insert in lieu thereof the following new subsection (1):

(1) Hospitals—general purpose hospitals, psychiatric facilities, detoxification facilities—All patient bedrooms and toilets, and all public use and common use areas are required to be designed and constructed to be accessible.

Delete section 6.1, subsection (3), and insert in lieu thereof the following new subsection (3):

(3) Long-term care facilities, nursing homes—All patient bedrooms and toilets, and all public use and common use areas are required to be designed and constructed to be accessible.

**661—302.8(103A,104A) Business and mercantile facilities.** ADAAG chapter 7 is adopted by reference as the accessibility requirements for business and mercantile facilities which are required to comply with rules 661—302.1(103A,104A) through 661—302.20(103A,104A).

**661—302.9(103A,104A) Libraries.** ADAAG chapter 8 is adopted by reference as the accessibility requirements for libraries which are required to comply with rules 661—302.1(103A,104A) through 661—302.20(103A,104A).

**661—302.10(103A,104A) Transient lodging facilities.** ADAAG chapter 9 is adopted by reference as the requirements for accessible transient lodging in facilities which are required to comply with rules 661—302.1(103A,104A) through 661—302.20(103A,104A).

**661—302.11(103A,104A) Transportation facilities.** ADAAG chapter 10 is adopted by reference as the accessibility requirements for transportation facilities which are required to comply with rules 661—302.1(103A,104A) through 661—302.20(103A,104A).

Rules 302.1(103A,104A) through 302.11(103A,104A) are intended to implement Iowa Code sections 103A.7, 103A.9, and 104A.1.

**661—302.12** to **302.19** Reserved.

**661—302.20(103A,104A) Making apartments accessible and functional for persons with disabilities.**

**302.20(1)** Multiple dwelling unit buildings. This rule shall apply to all multiple dwelling unit buildings that consist of four or more dwelling units, if such buildings have one or more elevators. In such buildings without an elevator, all ground floor units must be accessible. The requirements of this rule shall apply to the individual dwelling units and the common use spaces which are accessible to persons with disabilities in multiple dwelling unit buildings.

EXCEPTION 1: A multiple dwelling unit building shall be deemed to be in compliance with this rule if it is located in a local jurisdiction which has enacted accessibility rules which have been recognized by the U.S. Department of Housing and Urban Development as providing a safe harbor for compliance with the accessibility requirements established in the federal Fair Housing Act and if the building has been found to be in compliance with those requirements, unless the building is required to comply with the requirements of the Uniform Federal Accessibility Standards, or other applicable standards which may be more restrictive than the provisions of this rule.

EXCEPTION 2: Certain multiple dwelling unit buildings are required to comply with the Uniform Federal Accessibility Standards, published by the U.S. Access Board, 1988. Compliance with the provisions of this rule does not substitute for compliance with any applicable provision of the Uniform Federal Accessibility Standards, or any other applicable standards which may be more restrictive than the provisions of this rule.

NOTE: Compliance with the Uniform Federal Accessibility Standards is generally required for buildings and facilities constructed with federal financial assistance.

*"Dwelling unit"* means a single unit of residence for a household of one or more persons. Examples of a dwelling unit covered by these rules include a condominium, an apartment unit within an apartment building, and another type of dwelling in which sleeping accommodations are provided but toilet or cooking facilities are shared by occupants of more than one room or portion of the dwelling. Examples of the latter include dormitory rooms and sleeping accommodations in shelters intended for occupancy as a residence for homeless persons.

*"Ground floor"* means a floor of a building with a building entrance on an accessible route. A building may have one or more ground floors. Where the first floor containing dwelling units in a building is above grade, all units on that floor must be served by a building entrance on an accessible route. This floor will be considered to be a ground floor.

*a.* The individual dwelling units shall contain an accessible route into and through the unit.

(1) All doors intended for use as passage through the dwelling unit shall have a clear opening of at least 32″ nominal width with the door open 90 degrees, measured between the face of the door and the stop. Openings more than 24″ in depth are not considered doorways.

NOTE: A 34″ door, hung in the standard manner, provides an acceptable 32″ opening.

(2) Except at doorways, the minimum clear width of the accessible route shall be at least 36″ wide.

(3) In single-story units, special features such as lofts or sunken or raised areas are not required to be on an accessible route provided the areas do not interrupt the accessible route through the remainder of the dwelling unit.

(4) In multistory dwelling units in buildings with elevators, the story of the unit that is served by the building elevator shall be the primary entry to the unit and such entry/accessible floor shall comply with the requirements of subparagraphs (1), (2) and (3) above. The entry/accessible floor shall contain a bathroom or powder room which complies with paragraph *"c"* below.

(5) Exterior deck, patio, or balcony surfaces shall be no more than ½″ below the floor level of the interior of the dwelling unit, unless they are constructed of impervious material such as concrete, brick or flagstone. In such case, the surface shall be no more than 4″ below the floor level of the interior or lower if required by local building code.

(6) Thresholds at exterior doors, including sliding tracks, shall be no higher than ¾″. Thresholds and changes in elevations as in subparagraph (5) above shall be beveled with a slope no greater than 1:2.

*b.* Kitchens shall meet or be adaptable to meet the following:

(1) A clear floor space at least 30″ × 48″ that allows a parallel approach by a person in a wheelchair must be provided at the range or cooktop and the sink. Either a parallel or forward approach must be provided at the oven, dishwasher, refrigerator/freezer or trash compactor.

(2) Clearance between counters and all opposing base cabinets, countertops, appliances or walls must be at least 40″. In U-shaped kitchens with a sink or cooktop at the base of the "U," the base cabinets must be removable at that location or a 60″ turning radius must be provided.

*c.* All bathrooms of covered multifamily dwelling units shall comply with provisions of subparagraph (1) of this paragraph or at least one bathroom in the dwelling unit shall comply with provisions of subparagraph (2) of this paragraph and all other bathrooms and powder rooms within the dwelling unit must be on an accessible route with usable entry doors in accordance with paragraph *"a"* above.

However, in multistory dwelling units, only those bathrooms on the accessible level are subject to these requirements. Where the powder room is the only facility provided on the accessible level of a multistory dwelling unit, the powder room must comply with the provisions of subparagraph (1) or (2) of this paragraph.

(1) Sufficient maneuvering space shall be provided within the bathroom for a person using a wheelchair or other mobility aid to enter and close the door, use the fixtures, reopen the door and exit. Doors may swing into the clear floor space provided at any fixture if the maneuvering space is provided. Maneuvering space may include any knee space or toe space available below the bathroom fixtures.

Clear floor space at fixtures may overlap.

If the shower stall is the only bathing facility provided in the covered dwelling unit, the shower stall shall measure at least 36″ × 36″.

NOTE: Cabinets under lavatories are acceptable provided the bathroom has space to allow a parallel approach by a person in a wheelchair; if parallel approach is not possible within the space, any cabinets provided would have to be removable to afford the necessary knee clearance for forward approach.

(2) Where the door swings into the bathroom, there shall be a clear space (2′6″ × 4′0″) within the room to position a wheelchair or other mobility aid clear of the path of the door as it is closed and to permit the use of the fixtures. This clear space can include any knee space and toe space available below the bathroom fixtures.

Where the door swings out, a clear space shall be provided within the bathroom for a person using a wheelchair or other mobility aid to position the wheelchair such that the person is allowed use of the fixtures. There also shall be a clear space to allow persons using wheelchairs to reopen the door to exit.

When both tub and shower fixtures are provided in the bathroom, at least one fixture shall be made accessible. When two or more lavatories are provided in a bathroom, at least one shall be made accessible.

Toilets shall be located within bathrooms in a manner that permits a grab bar to be installed on one side of the fixture. In locations where toilets are adjacent to walls or bathtubs, the centerline of the fixture shall be a minimum of 1′6″ from the obstacle. The other (nongrab bar) side of the toilet fixture shall be a minimum of 1′3″ from the finished surface of the adjoining walls, vanities, or the edge of a lavatory.

Vanities and lavatories shall be installed with the center line of the fixture a minimum of 1′3″ horizontally from an adjoining wall or fixture. The top of the fixture rim is a maximum height of 2′10″ above the finished floor. If knee space is provided below the vanity, the bottom of the apron is at least 2′3″ above the floor. If provided, full knee space (for front approach) is at least 1′5″ deep.

Bathtubs and tub/showers located in the bathroom shall provide a clear access aisle adjacent to the lavatory that is at least 2′6″ wide and extends for a length of 4′0″ (measured from the head of the bathtub).

Stall showers in the bathroom may be of any size or configuration. A minimum clear floor space 2′6″ wide × 4′0″ deep should be available outside the stall. If the shower stall is the only bathing facility provided in the covered dwelling unit, or on the accessible level of a covered multistory unit, and measures a nominal 36″ × 36″, the shower stall must have reinforcing to allow for installation of an optional wall-hung bench seat.

*d.* Walls in bathrooms which are to be adaptable shall be reinforced to allow later installation of grab bars around toilet, tub, shower stall and shower seat where provided.

Where the toilet is not placed adjacent to a side wall, provision shall be made for floor-mounted foldaway or similar alternative grab bars. Where the powder room is the only toilet facility located on an accessible level of a multistory dwelling unit, it must comply with this requirement for reinforced walls for grab bars. "Powder room" means a room with a toilet and sink.

NOTE: A tub may have shelves or benches at either end; or a tub may be installed without surrounding walls, if there is provision for alternative mounting of grab bars. For example, a sunken tub placed away from walls could have reinforced areas for installation of floor-mounted grab bars. The same principle applies to shower stalls, e.g., glass-walled stalls could be planned to allow floor-mounted grab bars to be installed later.

Reinforcement for grab bars may be provided in a variety of ways (for example, by plywood or wood blocking) so long as the necessary reinforcement is placed so as to permit later installation of appropriate grab bars.

*e.* Public and common use areas shall be readily accessible to and usable by persons with disabilities.

*f.* Light switches, electrical outlets, thermostats and other environmental controls shall be located no higher than 48″, and no lower than 15″, above the floor. If the reach is over an obstruction (for example, an overhanging shelf) between 20″ and 25″ in depth, the maximum height is reduced to 44″ for forward approach; or 46″ for side approach, provided the obstruction (for example, a kitchen base cabinet) is no more than 24″ in depth. Obstructions should not extend more than 25″ from the wall beneath a control. (See ADAAG Figure 5.)

NOTE: Controls or outlets that do not satisfy these specifications are acceptable provided that comparable controls or outlets (i.e., that perform the same functions) are provided within the same area and are accessible.

**302.20(2)** Elevators. An elevator shall be required in any apartment building of four or more stories. An elevator required by this subrule shall meet the requirements established for accessible elevators in rule 661—302.5(103A,104A), which adopts by reference section 4.10 of the Americans with Disabilities Act Accessibility Guidelines (28 CFR Part 36, Appendix A).

NOTE: Elevators are not required in apartment buildings of three or fewer stories; however, the Uniform Federal Accessibility Standards, or any other applicable standard, may require the installation of an elevator. If an elevator is not required to be installed by this rule, then the elevator is not subject to the requirements of rule 661—302.5(103A,104A).

**302.20(3)** Any covered units within a multiple unit dwelling which comply with a code or standard which has been certified as a safe harbor for compliance with the accessibility requirements of the federal Fair Housing Act by the U.S. Department of Housing and Urban Development shall be deemed to be in compliance with rule 661—302.20(103A,104A), unless the covered units are required to comply with the Uniform Federal Accessibility Standards or any other applicable requirements which may be more restrictive than the provisions of this rule.

Rule 302.20(103A,104A) is intended to implement Iowa Code sections 103A.7(5) and 104A.2.

[Filed 12/2/05, Notice 9/14/05—published 12/21/05, effective 4/1/06]

# CHAPTER 303
# STATE BUILDING CODE—REQUIREMENTS FOR ENERGY CONSERVATION IN CONSTRUCTION

[Prior to 12/21/05, see rules 661—16.800(103A) to 661—16.802(103A)]

**661—303.1(103A) Scope and applicability of energy conservation requirements.**

**303.1(1)** *Scope.* Rules 661—303.1(103A) through 303.3(103A) establish thermal energy efficiency standards for the design of new buildings and structures or portions thereof, additions to existing buildings, and renovation and remodeling of existing buildings, except for residential buildings of one or two dwelling units, which are intended for human occupancy and which are heated or cooled by regulating their exterior envelopes and selection of their heating, ventilation, and air-conditioning systems, service water heating systems and equipment for the efficient use of energy, and lighting efficiency standards for buildings intended for human occupancy which are lighted.

**303.1(2)** *Applicability.* Rules 661—303.1(103A) through 661—303.3(103A) apply to design and construction of buildings which are intended for human occupancy throughout the state of Iowa. Any construction of buildings or facilities which are intended for human occupancy and which are heated or cooled is covered, with the exception of renovation and remodeling of residential buildings of one or two dwelling units, which are not covered. Rule 661—303.2(103A) establishes standards for design and construction of residential buildings of three or fewer stories. Rule 661—303.3(103A) establishes standards for design and construction of commercial buildings and residential buildings of four or more stories. The occupancy of any building covered by this chapter shall be determined based upon the occupancy definitions in chapter 3 of the International Building Code, 2006 edition.

**303.1(3)** *Review by architect or engineer.*

*a.* *Review required.* The plans and specifications for all buildings to be constructed which exceed a total volume of 100,000 cubic feet of enclosed space that is heated or cooled shall be reviewed by a registered architect or licensed professional engineer for compliance with applicable energy efficiency standards.

*b.* *Statement of review.* A statement that a review has been accomplished and that the design is in compliance with the energy efficiency standards shall be signed and sealed by the responsible registered architect or licensed professional engineer. This statement shall be filed with the commissioner or a local building official on a form approved by the commissioner prior to construction or before obtaining any local permits. The statement shall be filed with the commissioner for any project which is subject to plan review by the building code bureau.

*c.* *Additional buildings.* If the plans and specifications relating to energy efficiency for a specific structure have been approved, additional buildings may be constructed from those same plans and specifications without need of further approval if construction begins within five years of the date of approval. Alterations of a structure which has been previously approved shall not require a review because of these changes, provided the basic structure remains unchanged and no additional energy is required for heating, cooling or lighting.

*d.* *Changes to approved plans.* Prior to the completion of construction, no changes shall be made to any approved plan or specifications which increase the amount of energy used for heating, cooling, or lighting, unless the changes are approved by the responsible registered architect or licensed professional engineer in writing and notice has been filed with the commissioner or a local building official. The commissioner or a local building official shall be notified of any change which is anticipated to decrease the amount of energy used. Notification pursuant to this paragraph shall be to the commissioner for any project which is subject to plan review by the building code bureau.

**661—303.2(103A) Residential energy code.** The International Energy Conservation Code, 2006 edition, is adopted by reference as the residential energy code of the state of Iowa building code, applicable to residential construction limited to three or fewer stories throughout the state of Iowa, with the following amendments:

1. Delete sections 101, 103, 104, 105, and 106, and all sections contained within each of these.

2. Strike section 403.2.2 and adopt the following new section 403.2.2 in lieu thereof:

403.2.2 Sealing. All ducts, air handlers, filter boxes, and building cavities used as ducts shall be sealed. Joints and seams shall comply with Section M1601.3.1 of the International Residential Code. Air handlers with a manufacturer's designation for an air leakage of no more than 2 percent of the design air flow rate when tested at an air pressure of 1–inch water gauge when all air inlets, air outlets, and condensate drain port(s) are sealed shall be deemed sealed. Air handlers with filter boxes shall be tested with the filter box in place.

3. Delete chapter 5.

**661—303.3(103A) Adoption of nonresidential energy code.** The International Energy Conservation Code, 2006 edition, published by the International Code Council, 5203 Leesburg Pike, Suite 600, Falls Church, VA 22041, is hereby adopted by reference as the nonresidential energy code of the state building code, applicable to commercial construction or residential construction of four or more stories within the state of Iowa, with the following amendments:

1. Delete sections 101, 103, 104, 105, and 106, and all sections contained within each of these.
2. Delete chapter 4.

**661—303.4(470) Life cycle cost analysis.**

**303.4(1)** *Submission required.* Any public agency as defined by Iowa Code section 470.1 shall prepare a life cycle cost analysis for any new construction having 20,000 square feet of usable floor space which is heated or cooled by a mechanical or electrical system or for any renovation where additions or alterations exceed 50 percent of the value of the facility and affect an energy system. The life cycle cost analysis shall be prepared in compliance with Iowa Code chapter 470 and shall be submitted to the state building code commissioner before construction commences.

**303.4(2)** *Notification by state agency.* Any public agency which is a state agency as defined in Iowa Code section 7D.34 shall, within 60 days of final selection of a design architect or engineer, notify the commissioner and the department of natural resources of the methodology to be used to perform the life cycle cost analysis. Notice shall be given on the forms provided by the department of natural resources for this purpose. A life cycle cost analysis prepared by a state agency shall be submitted in sufficient time ahead of the release of plans for bids to allow for revisions or additions which may be made to the plans. Public funds shall not be used for the construction or renovation of a facility unless the design for the work is prepared in accordance with Iowa Code chapter 470 and the actual construction or renovation is consistent with the design.

**303.4(3)** *Exemptions from implementation.* Any public agency responsible for construction or renovation of a public facility shall implement the recommendation of the life cycle cost analysis except as provided in this subrule.

*a.* A public agency responsible for construction or renovation of a public facility may apply to the commissioner for exemption from any recommendation of the life cycle cost analysis.

*b.* The public agency shall implement all recommendations of the life cycle cost analysis except those which have been approved for exemption by the commissioner and the director of natural resources.

EXCEPTION: The public agency is not required to implement any recommendation which would result in a violation of any other provision of law. If the public agency determines that compliance with any recommendation of the life cycle cost analysis would result in a violation of law, the public agency shall so notify the commissioner.

*c.* The commissioner and the director of natural resources shall evaluate each request for an exemption on a case-by-case basis.

*d.* The commissioner and the director of natural resources shall consider the following factors in determining whether or not to grant an exemption:

(1) The purpose of the facility or renovation;
(2) Preservation of historic architectural features;
(3) Site considerations;
(4) Health and safety concerns;

(5) Compliance with any other provisions of law; and

(6) The technical feasibility of implementing the recommendation. "Technically feasible" means that a recommendation may be implemented without altering major structural features of an existing facility.

**661—303.5(103A) Energy review fee.** The fee for filing an energy review shall be $25. Payment of the fee, by money order, check, or warrant made payable to Treasurer, State of Iowa, shall be included with the submission of documents for an energy review.

These rules are intended to implement Iowa Code chapter 103A.

[Filed 12/2/05, Notice 9/14/05—published 12/21/05, effective 4/1/06]
[Filed emergency 6/9/06—published 7/5/06, effective 7/1/06]
[Filed 10/5/06, Notice 7/5/06—published 10/25/06, effective 1/1/07]
[Filed 10/31/07, Notice 9/12/07—published 11/21/07, effective 1/1/08]
[Filed emergency 6/11/08—published 7/2/08, effective 6/15/08]

CHAPTERS 304 to 321
Reserved

# CHAPTER 322
# STATE BUILDING CODE —
# MANUFACTURED HOUSING SUPPORT AND ANCHORAGE SYSTEMS

[Prior to 7/2/08, see rules 661—16.625(103A) and 661—16.626(103A)]

**661—322.1** Reserved.

**661—322.2(103A) Definitions.** The definitions in 661—subrule 16.620(4) apply to the rules in this chapter.

**661—322.3** to **322.10** Reserved.

**661—322.11(103A) Support and anchorage of manufactured homes.**

**322.11(1)** Manufactured homes shall be installed in accordance with one of the following paragraphs, as applicable:

*a.* Homes manufactured prior to October 20, 2008, shall be installed with support and anchorage as recommended by the manufacturer and as required by 24 CFR Part 3280, Manufactured Home Construction and Safety Standards, as published April 1, 2004; or

*b.* Homes manufactured on or after October 20, 2008, shall be installed in accordance with 24 CFR Part 3285, Model Manufactured Home Installation Standards, as published October 19, 2007; or

*c.* With a support and anchorage system designed by a licensed professional engineer; or

*d.* With a support and anchorage system that complies with subrules 322.11(2) and 322.11(3). This option shall apply only if the manufacturer's instructions are not available or the unit was manufactured before June 15, 1976. "The manufacturer's instructions are not available" means that the installer has requested and been unable to obtain the instructions from the manufacturer or its successor company and has requested and been unable to obtain the instructions from the building code bureau.

EXCEPTION: Minor adjustments in pier locations may be necessary to avoid utility and service lines. Additional supports may be needed to ensure that the maximum allowed distance between supports and anchors is not exceeded.

*e.* Only in areas subject to a disaster emergency proclamation issued by the governor pursuant to Iowa Code section 29C.6, in compliance with subrule 322.11(4).

**322.11(2)** Requirements for support system installations.

*a.* Piers placed on foundations shall be installed and centered directly under the main frame longitudinal beams. The piers should not be farther apart than 10 feet on centers for manufactured homes 12 feet wide or less and not more than 8 feet on centers for manufactured homes over 12 feet wide to less than 16 feet wide and no more than 6 feet on centers for manufactured homes 16 feet wide or more. The main frame, front or back, should not extend farther than 2 feet beyond the centerline of the end piers.

NOTE: When making excavations for footings and piers on private property, installers shall take precautions to ensure that no telephone, electrical, plumbing or water lines are contacted. Utility line locations shall be verified with the property owner or property owner's representative.

*b.* Pier foundations shall be placed below the frostline on level, undisturbed soil, or on controlled fill that is free of grass and organic materials. (A small amount of sand may be of use to provide a level surface.) All pier foundations shall be set level, and piers must be installed plumb. The pier foundation shall be at least a 16″ × 16″ × 4″ solid concrete pad, precast or poured in place, or other approved material. Two nominal 4″ × 8″ × 16″ solid concrete blocks may be used provided that the joint between the blocks is parallel to the main frame longitudinal beam. Concrete used in foundations shall have a 28-day compressive strength of not less than 3,000 pounds per square inch (3,000 psi).

*c.* Unless otherwise directed by the owner of the site, the soil-bearing capacity of the site may be assumed to be 2,000 pounds per square foot. The acceptable construction under this subrule is based upon a soil-bearing capacity of 2,000 pounds per square foot. Sites with less soil-bearing capacity will require increased-size footings.

EXPLANATION: The permissible footing sizes and pier spacing are based upon a combined live and dead load of 65 pounds per square foot of unit. This assumes that the full snow and internal live load will not be present at the same time.

*d.* Piers may be constructed of concrete or undamaged nominal 8″ × 8″ × 16″ concrete blocks, open-celled or solid, placed on the pier foundation. All open-celled concrete block shall be installed with the cells of the block in a vertical position. Nominal 2″ × 8″ × 16″ or nominal 4″ × 8″ × 16″ solid concrete blocks may be utilized as needed to achieve the necessary heights of the piers for a particular installation. A nominal 2″ × 8″ × 16″ wood plate, or equivalent, shall be placed on top of each pier, unless there is at least 4 inches of solid block, with shims fitted and driven between the wood plate or solid block and the main frame longitudinal beam. The wood blocking shall not occupy more than a nominal 2 inches of vertical space, and shims shall not occupy more than 1 inch of vertical space. Shims which have a thickness of more than 3/8″ shall be hardwood.

(1) Piers up to 40 inches in height, except corner piers over three blocks high (a nominal 24″), may be of single-block construction and shall be installed transverse (right angle) to the main frame longitudinal beam.

(2) Piers over 40 inches in height but not exceeding 80 inches in height and corner piers over three blocks high shall be of double-block construction with every other course either parallel or transverse (right angle) to the main frame longitudinal beam. These piers shall be capped with a nominal 16″ × 16″ × 4″ solid concrete block or equivalent. Wood blocking and hardwood shims shall be installed accordingly.

(3) Piers over 80 inches in height shall be of reinforced concrete or of double-block construction and installed exactly according to the procedure given in subparagraph (2) above. Only celled concrete blocks shall be used (with open cells vertical) with 3/8″ diameter or larger steel reinforcing rods placed in the pier corners and all cells filled with 3,000 psi concrete. Wood blocking and shims shall be installed accordingly.

**322.11(3)** Requirements for anchorage systems. When instructions are not provided by the manufacturer, ties shall be attached vertically and diagonally to a system of ground anchors in a manner as illustrated in Figures 4 and 5. The minimum number of ties required are listed in Table 6–A. There shall be a diagonal tie between the ground anchors and the unit at each vertical tie. Additional diagonal ties may be required between vertical ties. The ties shall be as evenly spaced as practicable along the length of the unit with not over 8 feet open on each end.

*a.* Ties may be either steel cable, steel strapping, or other materials that meet the requirements of 322.11(3)*"f."* Ties are to be fastened to ground anchors and drawn tight with galvanized turnbuckles or yoke-type fasteners and tensioning devices. Turnbuckles shall be ended with jaws of forged or welded eyes (hook ends are not approved).

*b.* When continuous straps (over-the-top tie-downs) are provided as vertical ties, they should be positioned at rafters and studs to prevent structural damage. Where a vertical tie and diagonal tie are located at the same place, both ties may be connected to a single doublehead ground anchor provided that the anchor used is capable of carrying the combined loads and the anchor is included on a list of approved products maintained by the commissioner.

*c.* Cable used for ties shall be either galvanized steel or stainless steel and shall have a breaking strength of at least 4,725 pounds. Cable should be either 7/32″ diameter or greater (7 × 7) steel cable or ¼″ diameter or greater (7 × 19) aircraft cable. All cable ends should be secured with at least two I-bolt-type cable clamps or other nationally approved fastening devices.

*d.* When flat steel straps are used as ties, they shall be type 1, class B, grade 1, 1¼″ wide and 0.035″ thick, conforming with federal standard QQ-S-781-F, with a breaking strength of at least 4,725 pounds. Zinc coating (weather protection) shall be a minimum of 0.30 ounces per square foot of surface. Steel strap ties shall terminate with D-rings, bolts, or other nationally approved fastening devices that will not cause distortion or reduce the breaking strength of the ties.

*e.* The direction of pull of the diagonal ties should be at a right angle to the main frame longitudinal beam. Connection of the diagonal tie to the main frame longitudinal beam should be in accordance with anchor system instructions for those fastening devices. When steel strap ties are used, care should be exercised that the minimum bending radius is adhered to so the breaking strength is not reduced.

*f.* The anchorage materials shall be capable of resisting an allowable minimum working load of 3,150 pounds (pullout in a vertical direction) with no more than 2 percent elongation and shall withstand a 50 percent overload. All anchorage materials shall be resistant to weathering deterioration at least equivalent to that provided by a coating of zinc on steel strapping of not less than 0.30 ounces per square foot surface coated. Anchors to reinforced concrete slab or to rock shall be of comparable strength as provided within this paragraph.

Each ground anchor, when installed, shall be capable of resisting an allowable working load at least equal to 3,150 pounds in the direction of the ties plus a 50 percent overload (4,750 pounds total) without failure. Failure shall be considered to have occurred when the point of connection between the tie and anchor moves more than 2 inches at 4,750 pounds in the direction of the vertical tie when anchoring equipment is installed in accordance with the anchorage manufacturer's instructions. Those ground anchors which are designed to be installed so that the loads on the anchor are other than direct withdrawal shall be designed and installed to resist an applied design load of 3,150 pounds at 45° from horizontal without displacing the anchor more than 4 inches horizontally at the point where the tie attaches to the anchor.

Anchors designed for connection of multiple ties shall be capable of resisting the combined working load and overload consistent with the intent expressed in this paragraph.

*g.* Ground anchors shall be installed so that the load-carrying portion of the anchor in its final working position is below the frost depth (42 inches), and the anchor head shall be at ground level. Total anchor length shall be more than 42 inches as necessary.

NOTE: When installing ground anchors on private property, installers shall take precautions to ensure that no telephone, electrical, plumbing or water lines are contacted. Utility line locations shall be verified with the property owner or property owner's representative.

TABLE 6–A
MINIMUM NUMBER OF TIEDOWNS
REQUIRED FOR SINGLEWIDE MOBILE HOMES

| MOBILE HOME BOX LENGTH NOT EXCEEDING | MINIMUM NUMBER OF TIEDOWNS PER SIDE | |
|---|---|---|
| | DIAGONAL TIES | VERTICAL TIES* |
| 40′–0″ | 3 | 2 |
| 54′–0″ | 3 | 2 |
| 73′–0″ | 4 | 2 |
| 84′–0″ | 5 | 2 |

*If more than the minimum number of vertical or diagonal ties have been supplied, they shall all be used.

NOTES:

1. Doublewide mobile homes shall comply with Table 6–A except that no vertical ties are required.
2. Wherever a vertical tie and a diagonal tie lie in a plane that is vertical and transverse to the main longitudinal beam, both ties may be connected to the same ground anchor, providing that particular anchor withstands both loadings.
3. This table shall be used only if there are no manufacturer's approved installation requirements.

FIGURE 4

MOBILE HOME TIEDOWN

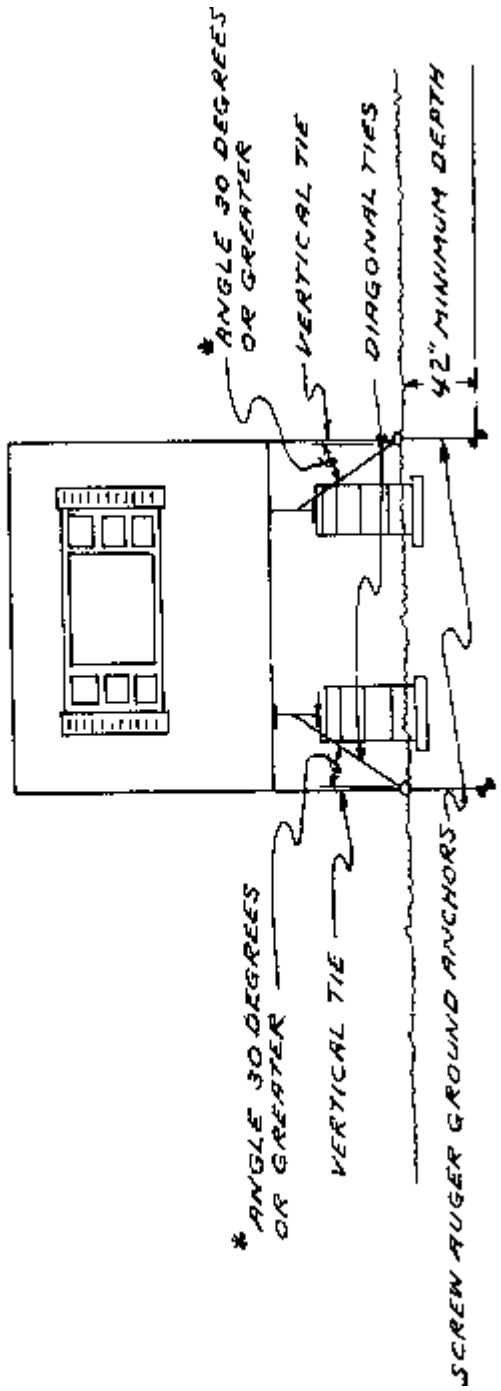


*DIAGONAL TIE SHALL DEVIATE FROM A VERTICAL DIRECTION 30 DEGREES OR MORE.

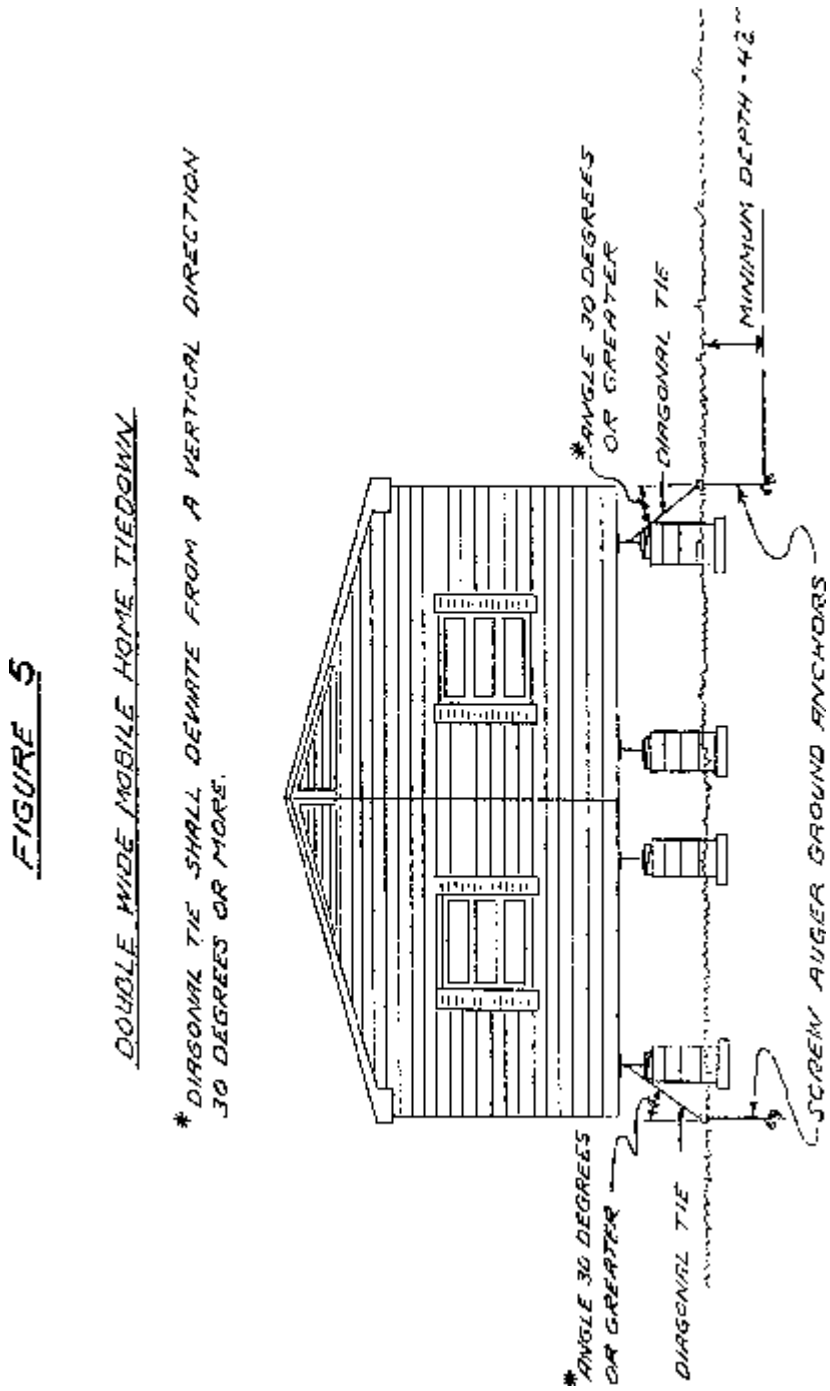


**322.11(4)** In an area subject to a disaster emergency proclamation issued by the governor pursuant to Iowa Code section 29C.6, a manufactured home may be installed without a permanent support system provided that all of the following apply:

*a.* The installation complies with anchorage requirements and aboveground support requirements specified by the manufacturer or specified in subrule 322.11(3) as applicable;

*b.* A government agency or a third-party contractor is contractually obligated to regularly inspect the home while it is occupied and to loosen the ties or straps used in the anchoring system as needed between November 15 of each year and April 15 of the following year, in order to prevent frost heave from affecting the home, and to retighten the ties or straps on or after April 15 and prior to May 15 of the following year; and

*c.* The home shall be vacated within 18 months after installation without a support system which is fully compliant with subrules 322.11(1), 322.11(2), and 322.11(3). A home installed in compliance with this subrule may continue to be occupied if it has been reinstalled in compliance with the provisions of this rule that would apply in the absence of a proclaimed disaster emergency.

**661—322.12(103A) Suspension of installation requirements in proclaimed disaster emergencies.** The commissioner may suspend any requirement established in this chapter or 661—Chapter 16 for the installation of manufactured homes, provided that all of the following apply:

1. The installation is within an area that is currently subject to a disaster emergency proclamation issued by the governor.
2. The commissioner finds that suspension of the requirement or requirements presents no imminent threat to the health or safety of any individual and specifically of any person who may occupy a manufactured home installed while the suspension is in effect.
3. Any manufactured home whose installation is subject to a suspension of any requirement shall be occupied only for the duration of the disaster emergency proclamation and for no more than 180 days after the expiration of the proclamation, or for a shorter time specified by the commissioner, unless the home has been installed or reinstalled in compliance with all requirements of this chapter and 661—Chapter 16 prior to the expiration of the period specified for suspension of the requirements.

**661—322.13** to **322.19** Reserved.

**661—322.20(103A) Fees.**

**322.20(1)** All remittances of fees shall be made by check or money order payable to Iowa Department of Public Safety — Building Code Bureau. Fees shall be remitted to the Building Code Bureau, Fire Marshal Division, Iowa Department of Public Safety, 215 East 7th Street, Des Moines, Iowa 50319.

**322.20(2)** The following table sets out the fee schedule for the manufactured home program.

| | |
|---|---|
| Installation Seal | $25 |
| Installation Seal Replacement | $10 |
| Verification Inspections Requested by Installer or Owner | No Charge |
| Ground Support and Anchoring System Approval | $100 |

These rules are intended to implement Iowa Code section 103A.9.

[Filed emergency 6/12/08—published 7/2/08, effective 7/1/08]
[Filed emergency 6/25/08—published 7/16/08, effective 7/1/08]
[Filed emergency 7/8/08—published 7/30/08, effective 7/10/08]

# CHAPTER 323
# TEMPORARY EMERGENCY USE OF FACTORY-BUILT STRUCTURES-COMMERCIAL USE

**661—323.1(103A) Temporary factory-built structures for commercial use.** A factory-built structure, as defined in Iowa Code section 103A.3, may be installed and used as a temporary location for a business or commercial operation, provided that all of the following apply:

**323.1(1)** The installation is in an area currently subject to a disaster emergency proclamation issued by the governor pursuant to Iowa Code section 29C.6.

EXCEPTION: If outside any area covered by a current disaster emergency proclamation, the installation is approved in writing by the building code commissioner provided that all of the other requirements of this rule are met.

**323.1(2)** The structure was manufactured to be installed without a permanent foundation.

**323.1(3)** The installation fully complies with all applicable installation requirements established by the manufacturer.

EXCEPTION: If specifications provided by the manufacturer provide for the use of both a support system and an anchoring system, a structure may be installed without a permanent support system, provided that an anchoring system is installed in compliance with specifications provided by the manufacturer and the owner or occupant ensures that straps or ties are loosened to prevent the structure from suffering damage from frost heave as needed between November 15 of any year during which it is in use and April 15 of the following year. The straps or ties must be retightened on or after April 15 and no later than May 15 of the following year.

**323.1(4)** The owner ensures full compliance with all maintenance requirements established by the manufacturer.

**323.1(5)** The structure meets all requirements of other applicable codes for the use of the structure, except that a structure installed in compliance with this rule is not required to display an Iowa seal as otherwise required by 661—subrules 16.610(21), 16.610(22), and 16.610(24).

**323.1(6)** The structure is not used as a private residence.

**323.1(7)** The structure is vacated within 18 months of installation.

**323.1(8)** No portion of the structure is used as an educational occupancy, unless written permission for such use has been issued by the state fire marshal and the state building code commissioner.

**323.1(9)** No portion of the structure is used as a health care facility or portion of a health care facility unless written permission for such use has been issued by the state fire marshal and the state building code commissioner.

This rule is intended to implement Iowa Code section 103A.9.

[Filed emergency 7/8/08—published 7/30/08, effective 7/10/08]

CHAPTERS 324 to 349
Reserved

# CHAPTER 350
# STATE HISTORIC BUILDING CODE

**661—350.1(103A) Scope and definition.**

**350.1(1)** *Scope.* This chapter applies to buildings which meet the requirements for placement on the National Register of Historic Places. This chapter is an alternative to the state building code or local building codes for the buildings to which it applies.

*"Historic building"* means any building or structure that is listed in the state or National Register of Historic Places; that is designated as a historic property under local or state designation law or survey; that is certified as a contributing resource within a National Register-listed or locally designated historic district; or that has an opinion or certification that the property is eligible to be listed on the state or National Register of Historic Places either individually or as a contributing building to a historic district by the state historic preservation officer pursuant to Iowa Code section 103A.42 or the Keeper of the National Register of Historic Places.

**350.1(2)** *Administration.* The provisions of 661—Chapter 300 are adopted by reference.

**350.1(3)** *Adoption.* The provisions of the International Existing Building Code, 2006 edition, published by the International Code Council, 5203 Leesburg Pike, Suite 600, Falls Church, VA 22041, are hereby adopted as the alternative requirements for rehabilitation, preservation, restoration, and relocation of historic buildings, with the following amendments:

Delete chapter 1.

Delete the definition of "historic building."

Delete section 503.3.1.

Delete appendix A, chapters A1 through A5, and appendix B.

Delete resource A.

Delete all references to the "International Plumbing Code" and insert in lieu thereof "state plumbing code."

Delete all references to the "ICC Electrical Code" and insert in lieu thereof "National Electrical Code, 2005 edition."

NOTE 1: International Existing Building Code, 2006 edition, Resource A, provides guidelines for evaluating fire ratings of archaic materials and assemblies which may be used by designers and code officials when evaluating compliance with provisions of this chapter.

NOTE 2: Except for elevators excluded from the jurisdiction of the Iowa division of labor services by the provisions of Iowa Code section 89A.2, each elevator is required to comply with any applicable requirements established by the Iowa division of labor services and is subject to enforcement of any applicable regulations by the Iowa division of labor services.

NOTE 3: Except for boilers and pressure vessels excluded from the jurisdiction of the Iowa division of labor services by the provisions of Iowa Code section 89.4, each boiler or pressure vessel is required to comply with any applicable requirements established by the Iowa division of labor services and is subject to enforcement of any applicable regulations by the Iowa division of labor services.

Any boiler which is subject to requirements established by the Iowa department of natural resources is required to comply with any such requirements and is subject to enforcement of any applicable regulations by the Iowa department of natural resources.

This rule is intended to implement Iowa Code sections 103A.41 through 103A.45.

[Filed 12/2/05, Notice 9/14/05—published 12/21/05, effective 4/1/06]
[Filed 11/1/06, Notice 9/27/06—published 11/22/06, effective 1/1/07]

CHAPTERS 351 to 371
Reserved

# CHAPTER 372
# MANUFACTURED OR MOBILE HOME RETAILERS, MANUFACTURERS, AND DISTRIBUTORS

**661—372.1(103A) Definitions.** The definitions in 2006 Iowa Acts, Senate File 2394, section 1, are made part of this chapter. In addition, the following words and phrases when used in this chapter shall have these meanings respectively ascribed to them, except when the context otherwise requires.

*"Bureau"* means the Building Code Bureau, Fire Marshal Division, Iowa Department of Public Safety, 401 S.W. 7th Street, Suite N, Des Moines, Iowa 50309.

*"Certificate of title"* means a document issued by the appropriate official which contains a statement of the owner's title, the name and address of the owner, a description of the vehicle, a statement of all security interests and additional information required under the laws or rules of the jurisdiction in which the document was issued, and which is recognized as a matter of law as a document evidencing ownership of the vehicle described. The terms "title certificate," "title only," and "title" are synonymous with the term "certificate of title."

*"Commissioner"* means the building code commissioner.

*"Department"* means the Iowa department of public safety.

*"Manufacturer's certificate of origin"* means a certification signed by the manufacturer or importer that the manufactured or mobile home described has been transferred to the person or retailer named and that the transfer is the first transfer of the manufactured or mobile home in ordinary trade and commerce. The description shall include the make, model year, vehicle identification number, and other information which may be required by statute or rule. The terms "manufacturer's statement," "importer's statement or certificate," "MSO" and "MCO" are synonymous with the term "manufacturer's certificate of origin."

*"Model year"* means the year of original manufacture or the year certified by the manufacturer.

**661—372.2(103A) Criteria for obtaining a manufactured or mobile home retailer's license.**

**372.2(1)** *Licensing information.* Information concerning license requirements may be obtained from the Building Code Bureau, Fire Marshal Division, Iowa Department of Public Safety, 401 S.W. 7th Street, Suite N, Des Moines, Iowa 50309.

**372.2(2)** *Application.* A manufactured or mobile home retailer shall file a completed application form at least 30 days prior to the expiration of a current license or, if the application is for an initial license, 30 days prior to the date on which the retailer anticipates doing business. A retailer may not operate without a current license.

**372.2(3)** *Expiration.* Each license expires on January 1 of the calendar year following the year in which the license is issued, except that a license issued in December of any year shall cover the following calendar year.

**372.2(4)** *Fees.* The license fee established by statute is $100 annually or for any portion of a year, except that a license issued in December of any year is valid for the following calendar year and any retailer with a license valid for a particular calendar year may continue to operate under that license until the end of January of the following calendar year.

**372.2(5)** *Surety bond.* The applicant shall obtain a surety bond in the amount of $50,000. The original bond shall be filed with the department. The bond shall provide for a 30-day notice to the bureau, prior to cancellation. The bureau shall notify the bonding company of any violations of Iowa Code chapter 103A or these rules by the license holder. The bureau shall notify the retailer by mail or personal service that the retailer's license shall be revoked the same date the bond is canceled unless the bond is reinstated or a new bond is filed.

**372.2(6)** *Place of business.* The applicant shall maintain a place of business at a designated location. A manufactured or mobile home may be used as an office if the home's taxes are current. The place of business shall include telephone service and an office area in which are kept the business records, manufacturer's certificates of origin, certificates of title or other evidence of ownership of each manufactured or mobile home offered for sale.

**372.2(7)** *Separate place of business.* A separate retailer's license shall be obtained for each county in which the applicant maintains a place of business.

**661—372.3(103A) Operation under distinct name.** A manufactured or mobile home retailer shall not represent or advertise the business under any name other than the name that appears on the retailer's license.

**661—372.4(103A) Supplemental statements.** A manufactured or mobile home retailer shall file with the commissioner a written statement upon change of name or change of location of the retailer's place of business. The written statement shall be filed within ten days of the change with a fee of $100 in payment for a new license reflecting the change.

**661—372.5(103A) Denial, suspension, or revocation—civil penalties.**

**372.5(1)** The commissioner may deny the issuance or renewal of a license if the applicant has committed any violation of any provision of law applicable to the operation of a business required to be licensed pursuant to this chapter.

**372.5(2)** The commissioner may suspend or revoke a license for any violation of this chapter or of any other provision of law applicable to the operation of a business required to be licensed pursuant to this chapter.

**372.5(3)** The commissioner may impose a civil penalty for any violation of this chapter or of Iowa Code chapter 103A relating to the manufacture of a manufactured or mobile home. A civil penalty may be imposed in addition to a denial of the issuance or renewal of a license, a suspension of a license, or a revocation of a license. A civil penalty shall not be imposed in lieu of a denial of the issuance or renewal of a license or of a revocation of a license. A civil penalty shall not exceed $1,000 for each offense. Each violation involving a separate manufactured or mobile home, or a separate failure or refusal to allow an act to be performed or to perform an act as required by this chapter or Iowa Code chapter 103A, constitutes a separate offense. However, the maximum amount of civil penalties which may be assessed for any series of violations occurring within one year from the date of the first violation shall not exceed $1 million.

**372.5(4)** Suspension or revocation for nonpayment of child support. The following procedures shall apply to actions taken by the building code commissioner on a certificate of noncompliance received from the Iowa department of human services pursuant to Iowa Code chapter 252J:

*a.* The notice required by Iowa Code section 252J.8 shall be served upon the licensee by restricted certified mail, return receipt requested, or personal service in accordance with Iowa Rule of Civil Procedure 1.305. Alternatively, the licensee may accept service personally or through authorized counsel.

*b.* The effective date of revocation or suspension of certification of a licensee, as specified in the notice required by Iowa Code section 252J.8, shall be 60 days following service upon the licensee.

*c.* Licensees shall keep the building code commissioner informed of all court actions and all child support recovery unit actions taken under or in connection with Iowa Code chapter 252J and shall provide the building code commissioner with copies, within 7 days of filing or issuance, of all applications filed with the district court pursuant to Iowa Code section 252J.9, all court orders entered in such actions, and withdrawals of certificates of noncompliance by the child support recovery unit.

*d.* All applicable fees for an application or reinstatement must be paid by the licensee before a license will be issued, renewed, or reinstated after the building code commissioner has denied the issuance or renewal of a license or has suspended or revoked a license pursuant to Iowa Code chapter 252J.

*e.* In the event a licensee files a timely district court action following service of a notice pursuant to Iowa Code sections 252J.8 and 252J.9, the building code commissioner shall continue with the intended action described in the notice upon the receipt of a court order lifting the stay, dismissing the action, or otherwise directing the department to proceed. For the purpose of determining the effective date of

revocation or suspension of the certification, the building code commissioner shall count the number of days before the action was filed and the number of days after the action was disposed of by the court.

*f.* Suspensions or revocations imposed pursuant to this subrule may not be appealed administratively within the department of public safety.

NOTE: The procedures established in subrule 372.5(4) implement the requirements of Iowa Code chapter 252J. The provisions of Iowa Code chapter 252J establish mandatory requirements for an agency which administers a licensure program, such as the one established in this chapter, and provide that actions brought under these provisions are not subject to contested case procedures established in Iowa Code chapter 17A, but must be appealed directly to district court.

**372.5(5)** Appeals. Any denial, suspension, or revocation of a certification, or any civil penalty imposed upon a licensee under this rule, other than one imposed pursuant to subrule 372.5(4), may be appealed by the licensee within 14 days of receipt of the notice. Appeals of actions taken by the building code commissioner under this rule shall be to the commissioner of public safety and shall be treated as contested cases, following the procedures established in rules 661—10.301(17A) through 661—10.332(17A).

**661—372.6(103A,321) Sale or transfer of manufactured or mobile homes.** The following criteria apply to the sale or transfer of manufactured or mobile homes.

**372.6(1)** *Retailer sales.*

*a.* A manufactured home, which was manufactured on or after June 15, 1976, and which is owned by a retailer, shall not be offered for sale unless the retailer has a properly assigned manufacturer's certificate of origin or a certificate of title, a seal from the United States Department of Housing and Urban Development properly attached, a data plate attached by the manufacturer, and a manufacturer's installation manual for the home, if the manual is available to the retailer. A retailer shall not sell a manufactured or mobile home owned by the retailer without delivering to the transferee a manufacturer's certificate of origin or a certificate of title duly assigned to the transferee.

*b.* A used manufactured or mobile home with an Iowa title assigned to the retailer shall not be reassigned by the retailer. After acquiring the used home, the retailer shall obtain a new certificate of title as required by law.

**372.6(2)** *Transfers.* A manufactured or mobile home not owned by a retailer may be offered for sale and sold by a retailer under the following conditions:

*a.* The manufactured or mobile home owner and retailer shall enter into a written listing agreement, signed by the owner or by one owner of a manufactured or mobile home owned jointly by more than one person, and signed by the retailer, which shall be dated and include the following provisions:

(1) The make, model year, and vehicle identification number.

(2) The period of time that the agreement shall remain in force.

(3) The commission or other remuneration that the retailer is entitled to receive.

(4) The price for which the manufactured or mobile home shall be sold.

(5) The name and address of the secured party, if the manufactured or mobile home is subject to a security interest.

(6) Any additional terms to which the owner(s) and retailer agree.

*b.* If current taxes have not been paid, the taxes and penalties shall be paid from the proceeds of the sale.

*c.* The retailer shall inform a prospective purchaser of a manufactured or mobile home that the home is not owned by the retailer and, if requested by a prospective purchaser, provide the name and address of the owner(s).

*d.* An offer to purchase a manufactured or mobile home shall be in writing.

*e.* The retailer shall make a written disclosure to the purchaser of the description of the manufactured or mobile home; the name and address of the owner; if the home is subject to a security interest, the name and address of the secured party; and, if the current taxes have not been paid, the amount of taxes and penalties due. The disclosure statement shall be signed and dated by the transferee.

The disclosure statement shall be in duplicate. The original shall be given to the transferee and the duplicate retained by the retailer, at the retailer's principal place of business, for a period of three years.

*f.* The documents required pursuant to this subrule shall be made available to the commissioner or any designee of the commissioner for inspection upon request.

**661—372.7(103A) Right of inspection.** The commissioner or any designee of the commissioner shall have the authority to inspect manufactured or mobile homes, business records, manufacturer's certificates of origin, certificates of title or other evidence of ownership of each manufactured or mobile home offered for sale.

**661—372.8(103A) Criteria for obtaining a manufactured or mobile home manufacturer's or distributor's license.** Information concerning license requirements may be obtained from the Building Code Bureau, Fire Marshal Division, Iowa Department of Public Safety, 401 S.W. 7th Street, Suite N, Des Moines, Iowa 50309.

**372.8(1)** *Application.* A manufactured or mobile home manufacturer or distributor shall file a completed application form at least 30 days prior to the expiration of a current license, or if the application is for an initial license, 30 days prior to the date on which the manufacturer or distributor anticipates doing business. A manufacturer or distributor may not operate without a current license.

**372.8(2)** *Expiration.* Each license expires on January 1 of the calendar year following the year in which it is issued, except that a license issued in December of any year shall cover the following calendar year.

**372.8(3)** *Fees.* The license fee established by statute is $100 annually or for any portion of a year, except that a license issued in December of any year is valid for the following calendar year and any manufacturer or distributor with a license valid for a particular calendar year may continue to operate under that license until the end of January of the following calendar year.

**372.8(4)** *Notification.* Manufactured or mobile home manufacturers and distributors shall, within ten days of the fact, notify the bureau in writing of:

*a.* Any change in the name, method of doing business or location of the place of business as shown on the license and shall include a fee of $100 in payment of a new license reflecting the change. However, a change in the location of the place of business when the original location is in an area subject to a disaster emergency proclamation issued by the governor pursuant to Iowa Code section 29C.6 and when the relocation results from flooding, storm damage, or other conditions which form a basis for issuance of the disaster emergency proclamation shall not require the issuance of a new license. In these circumstances, an amended license shall be furnished to the licensee at no charge to the licensee.

*b.* Issuance of a contract with a person in this state to sell new manufactured or mobile homes at retail.

*c.* Any change in the trade names of manufactured or mobile homes being manufactured for delivery in this state.

**372.8(5)** *Required acts.* Manufactured or mobile home manufacturers and distributors shall furnish sample manufacturer's certificates of origin to the commissioner for each make of manufactured or mobile home assembled by the manufacturer for delivery in this state.

**661—372.9(17A,103A) Waivers.** Applications for waivers of the provisions of the rules in this chapter may be submitted and shall be considered under the procedures and criteria established in rule 661—10.222(17A), except for the following:

1. Petitions for waivers shall be addressed to:

Building Code Commissioner
Fire Marshal Division
Iowa Department of Public Safety
401 S.W. 7th Street, Suite N
Des Moines, Iowa 50309

2. Consideration of and determinations regarding requests for waivers of any provision of this chapter shall be the responsibility of the building code commissioner. Any reference to "department" in rule 661—10.222(17A) shall be replaced, for purposes of this rule, with "building code commissioner."

These rules are intended to implement Iowa Code chapter 103A as amended by 2006 Iowa Acts, Senate File 2394.

[Filed 11/2/06, Notice 9/27/06—published 11/22/06, effective 1/1/07]
[Filed emergency 11/29/06—published 12/20/06, effective 1/1/07]
[Filed emergency 6/30/08—published 7/30/08, effective 7/1/08]

# CHAPTER 373
Reserved

# CHAPTER 374
# MANUFACTURED HOUSING INSTALLER CERTIFICATION

[Prior to 7/2/08, see rule 661—16.622(103A)]

**661—374.1(103A) Certification program.** There is established in the building code bureau of the fire marshal division a manufactured housing installer certification program. The program may be contacted by E-mail at mhinfo@dps.state.ia.us, by telephone at (515)725-6145, or by mail at the following address:

Manufactured Housing Installer Certification Program
Building Code Bureau
Fire Marshal Division
Iowa Department of Public Safety
215 East 7th Street
Des Moines, Iowa 50319

**661—374.2(103A) Certified installer required.** There shall be at least one person certified as a manufactured housing installer present at the installation of any manufactured home in Iowa. The installation of a manufactured home shall be under the direct supervision of a certified manufactured housing installer, who shall be present at all times at the installation site while any installation work is proceeding.

EXCEPTION: Installation of a manufactured home may be completed by the owner of the home, if the home is the primary residence of the person completing the work, whether or not the person is certified as a manufactured housing installer, provided that the work is inspected as required and that a state-certified installer certifies compliance with appropriate provisions of this chapter, 661—Chapter 16, and 661—Chapter 322.

**661—374.3(103A) Requirements for installer certification.** An applicant for certification must meet all of the following requirements:

**374.3(1)** The applicant must be at least 18 years old.

**374.3(2)** The applicant must have a minimum of one year of experience in the installation, construction or inspection of manufactured homes. Proof of experience shall be submitted on a notarized affidavit submitted with the application to the commissioner.

**374.3(3)** The applicant must successfully complete a minimum of eight hours of training approved by the commissioner. Training shall be based on the manufactured housing installation standards published by the U.S. Department of Housing and Urban Development and material approved by the commissioner.

**374.3(4)** The applicant must have received a passing grade on an examination approved by the commissioner.

**661—374.4(103A) Certification fee.** The certification fee shall be $300, payable at the time of application, and shall cover certification for three years. Fees shall be remitted in the form of a check or money order, payable to the Iowa Department of Public Safety – Building Code Bureau. The following should be written in the memo portion of the check: "Manufactured Housing Installer Certification." Applications and fees received after July 1 of any year will cover the remainder of the fiscal year in which they are received and the following two state fiscal years. Applications and fees received prior to July 1 of any year shall cover the period through June 30 of the third year following.

EXCEPTION: If as of June 1, 2009, statutory language regarding fees collected for certification and recertification of manufactured housing installers does not clearly provide that any such fees collected are exempt from reversion to the state treasury pursuant to Iowa Code section 8.33, then all current certificate holders who paid the $300 fee shall have $200 of the fee refunded.

**661—374.5(103A) Certification period.** Installer certifications and recertifications shall be issued for three years and shall expire on June 30 of the third year of the certification period. Certifications and

recertifications issued after July 1 shall cover the remainder of the fiscal year in which they are issued and the following two state fiscal years.

EXCEPTION: If as of June 1, 2009, statutory language regarding fees collected for certification and recertification of manufactured housing installers does not clearly provide that any such fees collected are exempt from reversion to the state treasury pursuant to Iowa Code section 8.33, then all current certificates shall be modified to expire after one year rather than three years from their effective dates.

**661—374.6(103A) Review of application for certification.** Upon receipt of an application for certification or recertification, staff of the building code bureau shall review the application and recommend approval or denial to the building code commissioner. If an application is approved, the certificate shall be issued to the applicant. If an application is denied, the applicant shall be notified and given an explanation of the reason or reasons for denial. Denials of applications by the building code commissioner may be appealed according to the contested case provisions of 661—Chapter 10. An appeal may be filed as a request for contested case proceeding as provided in rule 661—10.304(17A). An appeal must be filed within 30 days of the date of the denial.

**661—374.7(103A) Certification renewal and continuing education.**

**374.7(1)** A certification may be renewed if the installer applying for recertification has completed 12 hours of continuing education, approved by the commissioner, during the three-year certification period. Such training shall be submitted to the commissioner for review and approval prior to the date the training is received. Requests for approval shall be submitted on a form supplied by the commissioner, with supporting documentation.

**374.7(2)** Any installer who has not been recertified by the expiration date of the installer's certification shall not be allowed to work as an installer until a valid certification is obtained.

**374.7(3)** Failure to renew a certification within 60 days of its expiration shall require successful completion of an approved examination.

**374.7(4)** The recertification fee shall be $300, payable at the time of application. Fees shall be remitted in the form of a check or money order, payable to the Iowa Department of Public Safety – Building Code Bureau. The following shall be written in the memo portion of the check: "Manufactured Housing Installer Certification." Applications and fees received after July 1 shall cover the remainder of the fiscal year in which they are received and the following two years.

**661—374.8(103A) Suspension or revocation of certification.** An installer certification may be suspended or revoked for cause pursuant to a recommendation by the staff of the building code bureau to the building code commissioner. Suspension or revocation of an installer certification may be appealed subject to the provisions of 661—Chapter 10 for contested case proceedings. An appeal may be filed as a request for contested case proceeding as provided in rule 661—10.304(17A). An appeal must be filed within 30 days of the date of the suspension or revocation.

**661—374.9(103A) Civil penalties.** In addition to possible suspension or revocation of a certification, a person who violates the rules governing manufactured housing installation may be subject to civil penalties. Civil penalties may be assessed by the building code commissioner based on recommendation from staff of the building code bureau. Assessments of civil penalties may be appealed subject to the provisions of 661—Chapter 10 for contested case proceedings. An appeal may be filed as a request for contested case proceeding as provided in rule 661—10.304(17A). An appeal must be filed within 30 days of the date of the assessment of the civil penalty.

**661—374.10(103A) Inspections.**

**374.10(1)** The installation of any manufactured home as defined in Iowa Code section 103A.51 shall be subject to inspection by a representative of the building code bureau.

**374.10(2)** Any person planning to install a manufactured home shall notify the building code bureau of the person's intent to install a home at least three business days prior to the date of installation.

**374.10(3)** A manufactured home shall not be occupied until approval has been given by the building code bureau. If the inspection of the home is not completed within the three-business-day notification period, approval may be given by the building code bureau to proceed with the installation.

**661—374.11(103A) Temporary certification during proclaimed disaster emergencies.** The commissioner may issue a temporary certification which shall be valid for a period of 90 days only, for use only in areas which are currently subject to a disaster emergency proclamation issued by the governor pursuant to Iowa Code section 29C.6. The fee for a temporary emergency certification shall be $50. The following conditions must be met in order for a certification to be issued.

**374.11(1)** The applicant must be at least 18 years old.

**374.11(2)** The applicant must have general and complete operations liability insurance in the amount of at least $1 million for all work performed that requires certification pursuant to this chapter.

*a.* The carrier of any insurance coverage maintained by a certificate holder to meet this requirement shall notify the board 30 days prior to the effective date of cancellation or reduction of the coverage.

*b.* The certificate holder shall cease operation immediately if the insurance coverage required by this subrule is no longer in force and other insurance coverage meeting the requirements of this subrule is not in force. A certificate holder shall not initiate any installation work which cannot reasonably be expected to be completed prior to the effective date of the cancellation of the insurance coverage required by this subrule and of which the certificate holder has received notice, unless new insurance coverage meeting the requirements of this subrule has been obtained and will be in force upon cancellation of the prior coverage.

**374.11(3)** The applicant shall submit a completed application form to the certification program as specified in rule 661—374.1(103A), accompanied by a cover letter stating that the applicant is seeking temporary emergency certification and the applicant is certified or licensed to install manufactured homes in another state or states, and proof of insurance as required by subrule 374.11(2). The other state or states in which the applicant is certified or licensed shall be specified in the letter.

**374.11(4)** The application shall be accompanied by a check or money order for $50 to cover the certification fee. This fee is nonrefundable. The check or money order shall be made out to "Iowa Department of Public Safety," and the memo portion of the check or money order shall say "Manufactured Housing Installer Certification."

**374.11(5)** The application shall be accompanied by a copy of each license or certificate from other states cited in the letter required by subrule 374.11(1). The copy shall clearly display the name of the applicant and any unique identifying number assigned to the certificate or license.

**374.11(6)** A temporary emergency certificate may be renewed once, and the renewal certification shall be valid for 90 days beyond the expiration of the original temporary emergency certificate. The renewal application shall comply with subrules 374.11(1), 374.11(2), and 374.11(3). If a renewal application is received for a holder of a temporary emergency certificate which has previously been renewed once, the application shall be denied.

**374.11(7)** A holder of a temporary emergency certificate may apply at any time for a regular certificate issued pursuant to rules 661—374.2(103A) through 661—374.4(103A) by complying with all of the provisions of those rules.

**374.11(8)** A temporary emergency certificate may be suspended or revoked pursuant to rule 661—374.8(103A) or if the certificate holder fails to maintain compliance with any provision of this rule.

**374.11(9)** A decision to deny, suspend, or revoke a temporary emergency certificate may be appealed as provided in rule 661—374.8(103A).

These rules are intended to implement Iowa Code section 103A.59.

[Filed emergency 6/11/08—published 7/2/08, effective 7/1/08]

[Filed emergency 6/25/08—published 7/16/08, effective 7/1/08]

CHAPTERS 375 to 399
Reserved

# CHAPTER 400
# PEACE OFFICERS' RETIREMENT, ACCIDENT, AND DISABILITY SYSTEM—GOVERNANCE AND ADMINISTRATION

[Prior to 10/27/04, see 581—Ch 24]

**661—400.1(97A) Establishment of system.** The Iowa department of public safety peace officers' retirement, accident, and disability system is established by Iowa Code chapter 97A. The administrative rules governing the system are found in this chapter and in 661—Chapters 401, 402, 403, and 404.

**661—400.2(97A) Definitions.** The following definitions apply to 661—Chapters 400 through 404.

*"Active member," "actively engaged member"* or *"member in service"* means a currently employed peace officer of the Iowa department of public safety who is not reemployed pursuant to Iowa Code section 97A.3, subsection 3.

*"Board"* means the board of trustees of the peace officers' retirement system.

*"Commissioner"* means the commissioner of the Iowa department of public safety who also serves as the chairperson of the board of trustees.

*"Department"* means the Iowa department of public safety.

*"Line-of-duty death"* means the death of a member in service which was the direct and proximate result of a traumatic personal injury incurred in the line of duty. Line-of-duty death does not include the death of a member which resulted from stress, strain, occupational illness, or a chronic, progressive, or congenital illness, including, but not limited to, a disease of the heart, lungs, or respiratory system, unless a traumatic personal injury was a substantial contributing factor to the member's death. Line-of-duty death does not include the death of a member if the death results in eligibility for payment of a line-of-duty death benefit pursuant to Iowa Code section 100B.11 and 661—Chapter 291.

*"Medical board"* means a board of three physicians appointed by the board of trustees pursuant to Iowa Code section 97A.5, subsection 8.

*"Peace officers' retirement system,"* also referred to as *"the system,"* means the Iowa department of public safety peace officers' retirement, accident, and disability system.

*"Retired member"* means a person formerly employed as a peace officer of the Iowa department of public safety who is currently receiving or has received pension benefits from the system.

*"Secretary"* means an employee of the administrative services division of the Iowa department of public safety designated by the division director to provide staff support to the board.

*"Temporary"* means no more than 12 consecutive months in duration.

*"Temporary incapacity"* means a condition in which a member in service becomes unable to perform assigned duties as a natural and proximate result of an injury, disease, or exposure incurred or aggravated while in the actual performance of duty at some definite time and place.

**661—400.3(97A) Governance.** The system is governed by a board of trustees, appointed and elected as provided in Iowa Code section 97A.5, subsection 1. The board of trustees shall have five members, including the commissioner of public safety, who shall serve as chairperson of the board, the treasurer of state, an actively engaged member of the system, a retired member of the system, and a person appointed by the governor.

**400.3(1)** *Terms of office.* Terms of office of members of the board of trustees are as follows:

*a.* The commissioner of public safety shall serve a term that is concurrent with appointment as commissioner of public safety.

*b.* The treasurer of state shall serve a term that is concurrent with the term of treasurer of state.

*c.* The actively engaged member of the system shall serve a two-year term commencing on July 1 of an odd-numbered year and terminating on June 30 of the next odd-numbered year.

*d.* The retired member of the system shall serve a two-year term commencing on July 1 of an even-numbered year and terminating on June 30 of the next even-numbered year.

*e.* The member appointed by the governor shall serve a two-year term commencing on May 1 of the year of appointment and terminating on April 30 in the year of expiration.

**400.3(2)** *Election of board members.*

*a.* The actively engaged member shall be elected by secret ballot of the actively engaged members of the system. The retired member shall be elected by secret ballot of the retired members of the system. The actively engaged member shall be elected in odd-numbered years, and the retired member shall be elected in even-numbered years.

*b.* At least 90 days prior to the start of the term of office for the actively engaged member or the retired member, the secretary shall distribute by regular mail a write-in nomination ballot to each member of the system who is eligible to vote. The deadline for return of the ballots shall be established by the secretary at no less than 30 days nor more than 35 days after the date of distribution of the ballots and shall be printed on each ballot. In order to record a nomination, a member shall return the nomination ballot with a postmark or by personal delivery prior to the deadline specified on the ballot, filled in with the name of the member whom the member casting the ballot wishes to nominate.

*c.* The secretary shall contact each of the nominees who receive the three highest numbers of nominations to determine if each nominee is willing to serve if elected. For each nominee contacted who is unwilling to serve, the secretary shall contact the next nominee in descending order of nominations until three nominees willing to serve are identified.

*d.* The names of those three eligible members willing to serve if elected who receive the highest number of write-in nominations shall be placed on an election ballot.

*e.* The secretary shall distribute by regular mail election ballots to the members of the system who are eligible to vote. The deadline for return of the ballots shall be established by the secretary at no less than 30 days nor more than 35 days after the date of distribution of the ballots and shall be printed on each ballot. Any eligible member who receives a ballot and wishes to vote shall return the ballot to the secretary with a postmark or by personal delivery prior to the deadline printed on the ballot with a choice of one of the three candidates listed indicated. The candidate who receives the highest number of votes shall serve as the actively engaged member or the retired member of the system on the board of trustees.

*f.* In the event that two of the three candidates tie with the highest number of votes, a new election ballot with the names of the two candidates who tied shall be distributed by regular mail by the secretary to all members who are eligible to vote. The deadline for return of the ballots shall be established by the secretary at no less than 30 days nor more than 35 days after the date of distribution of the ballots and shall be printed on each ballot. Any eligible member who wishes to vote shall return the ballot to the secretary prior to the deadline with the member's preference indicated. The candidate who receives the highest number of votes shall serve as the actively engaged member or the retired member on the board of trustees.

*g.* In the event that all three candidates receive the same number of votes in the initial election balloting or that the two remaining candidates receive the same number of votes in an election held to break a tie between two candidates, the selection of the board member shall be determined by drawing of lots under the supervision of the commissioner of public safety, acting as chairperson of the board of trustees.

**400.3(3)** *Vacancies.* A vacancy in a position held by an elected member shall be filled in the same manner as the original election, and the newly elected member shall serve for the balance of the original term for the position filled.

**661—400.4(97A) Meetings of board of trustees.** The board of trustees shall meet at least quarterly, or upon the call of the chairperson. A quorum of the board shall consist of three members, and three concurring votes shall be necessary for a decision by the board. For purposes of a quorum or for voting, a member may participate in person, by audio conference or by videoconference.

**661—400.5(97A) Administrative support.** The department provides administrative support to the system, through the administrative services division. The secretary shall be an employee of the department. Employees of the system shall be under the administrative supervision of the director of the administrative services division. Additional administrative support may be provided by other employees of the department at the direction of the commissioner of public safety.

**661—400.6(97A) Forms and information.** Persons who wish to obtain forms or information about the peace officers' retirement, accident, and disability system shall address requests to:

Secretary
Peace Officers' Retirement System
Iowa Department of Public Safety
Wallace State Office Building
Des Moines, Iowa 50319
(515)281-8843
asdinfo@dps.state.ia.us

**661—400.7(97A) Annual statements.**

**400.7(1)** As soon as practical after the close of each fiscal year, a statement of account shall be furnished to each actively engaged member, which shall include the member's contribution for the year.

**400.7(2)** As soon as practical after the end of a calendar year, and in any event within any deadlines for this purpose established by the Internal Revenue Service or the Iowa department of revenue, a Form 1099, W2-P or an equivalent shall be prepared for and mailed to each person who received benefits during the year. The form shall detail the total pension paid during the year and shall comply with any applicable requirements established by the Internal Revenue Service and the Iowa department of revenue.

**661—400.8(97A) Books of account.** The following books of account shall be maintained by the secretary.

**400.8(1)** Self-balancing combination journal that records all receipts, disbursements and necessary adjustments.

**400.8(2)** Self-balancing ledger of control accounts.

**400.8(3)** Schedules at the close of the fiscal year which shall detail all control accounts except:

*a.* Pension reserve account.

*b.* Pension accumulation account.

**661—400.9(97A) Investments.** Investments of assets of the system shall be administered through the office of the treasurer of state. The board of trustees has the authority to direct the investment of funds, including, but not limited to, the execution of contracts with appropriately qualified individuals or firms to provide advice regarding investments.

**661—400.10(97A) Medical board.**

**400.10(1)** The medical board shall consist of three physicians, including at least one occupational medicine specialist, with the knowledge and experience to adequately evaluate the fitness for duty of a peace officer.

**400.10(2)** The board of trustees shall ratify the composition of the medical board and all subsequent changes to the composition of the medical board. The board of trustees may review the composition of the medical board at any time.

These rules are intended to implement Iowa Code chapter 97A.

[Filed 10/5/04, Notice 8/18/04—published 10/27/04, effective 12/1/04]
[Filed emergency 6/26/06—published 7/19/06, effective 7/1/06]
[Filed 9/20/06, Notice 7/19/06—published 10/11/06, effective 12/1/06]

# CHAPTER 401
# PEACE OFFICERS' RETIREMENT, ACCIDENT, AND DISABILITY SYSTEM—ADMINISTRATIVE PROCEDURES

[Prior to 10/27/04, see 581—Ch 24]

**661—401.1(97A) Applications.** Applications for benefits under Iowa Code chapter 97A shall be filed with the secretary on forms provided by the secretary. Applications for service retirement shall be made not more than 90 days nor less than 30 days in advance of the date of retirement. Applications for service retirement, ordinary or accidental disability, or temporary incapacity shall be reviewed by the secretary for completeness and then forwarded to the board of trustees.

**401.1(1)** *Manner of review for ordinary or accidental disability or for temporary incapacity.* The secretary shall compile the following materials, if available and applicable, for the board's review of a claim:

*a.* The application;

*b.* Any materials provided by the applicant;

*c.* Any available medical information in the possession of the board or the state;

*d.* Any information available through any workers' compensation claims made by the applicant; and

*e.* Recommendations and reports from the medical board.

NOTE: This subrule does not impose a responsibility on the secretary to discover documents or evidence not in the secretary's possession. It is only intended to outline the types of evidence the secretary should provide to the board if available.

**401.1(2)** *Commissioner's application.* The commissioner may file an application for ordinary or accidental disability on behalf of a member in service. The secretary shall review such applications in the same manner as those filed by a member. The fact that the commissioner has filed an application on a member's behalf shall not prevent the commissioner or the board from denying the application. All applications for accidental disability benefits shall be deemed cross-filed by the commissioner for the purpose of considering disability benefits. Nothing in this rule prevents the board from denying any application.

**661—401.2(97A) Determination on initial review.**

**401.2(1)** *Board approval.* The board may approve or deny the application as presented or may direct the applicant to provide further medical information.

**401.2(2)** *Denial and appeal.* A decision by the board to deny the application may be appealed by the applicant. Written notice of a denial shall be provided to the applicant by certified mail. The written notice shall disclose the applicant's right to appeal, the procedure for filing an appeal, and the deadline for filing an appeal. An appeal must be filed in writing with the secretary within 30 calendar days after the applicant receives written notice of the decision of the board. The board may extend the deadline for filing an appeal. At a minimum, an appeal shall include a short and concise statement of the basis for the appeal.

**661—401.3** to **401.100** Reserved.

PROCEDURE FOR RULE MAKING

**661—401.101(17A) Applicability.** Except to the extent otherwise expressly provided by statute, all rules adopted by the board are subject to the provisions of Iowa Code chapter 17A and the provisions of this chapter.

**661—401.102(17A) Advice on possible rules before notice of proposed rule adoption.** In addition to seeking information by other methods, the board may, before publication of a Notice of Intended Action, solicit comments from the public on a subject or subjects of possible rule making by the board by causing notice to be published in the Iowa Administrative Bulletin of the subject matter and indicating where,

when, and how persons may comment, or by otherwise publicizing the interest of the board in soliciting comment on a subject or subjects of possible rule making. Any such effort shall include publication of the interest of the board on the department of public safety's Web site and may include publication in any other venue deemed appropriate by the board or officials or staff of the department.

**661—401.103(17A) Public rule-making docket.** Pursuant to Executive Order 9, the department maintains a current public rule-making docket. All rule-making activity of the board of trustees of the peace officers' retirement, accident, and disability system shall be included in the rule-making docket of the department, including a rule making which has formally commenced with a Notice of Intended Action and an anticipated rule making identified by the board or staff. The rule-making docket is maintained on the Web site of the department.

**661—401.104(17A) Notice of proposed rule making.**

**401.104(1)** *Contents.* At least 35 days before the adoption of rules, the agency rules administrator of the department shall cause Notice of Intended Action to be published in the Iowa Administrative Bulletin. The Notice of Intended Action shall include:

*a.* A brief explanation of the purpose of the proposed rules;

*b.* The specific legal authority for the proposed rules;

*c.* Except to the extent impracticable, the text of the proposed rules;

*d.* Where, when, and how persons may present their views on the proposed rules; and

*e.* The date, time and place of an oral proceeding at which any interested party may comment on the proposed rules, or where, when, and how persons may demand an oral proceeding on the proposed rules if the notice does not already provide for one.

Where inclusion of the complete text of a proposed rule in the Notice of Intended Action is impracticable, the department shall include in the notice a statement fully describing the specific subject matter of the omitted portion of the text of the proposed rule, the specific issues to be addressed by that omitted text of the proposed rule, and the range of possible choices being considered by the board for the resolution of each of those issues.

**401.104(2)** *Incorporation by reference.* A proposed rule may incorporate other materials by reference.

**661—401.105(17A) Public participation.**

**401.105(1)** *Written comments.* For at least 20 days after publication of the Notice of Intended Action, persons may submit argument, data, and views, in writing, on the proposed rule. Such written submissions should identify the proposed rule to which they relate and should be submitted to the Agency Rules Administrator, Department of Public Safety, Wallace State Office Building, Des Moines, Iowa 50319, or to the person or office designated in the Notice of Intended Action.

**401.105(2)** *Oral proceedings.* The department may, at any time, schedule an oral proceeding on a proposed rule. If an oral proceeding has not previously been scheduled regarding proposed rules, the department shall schedule an oral proceeding on a proposed rule if, within 20 days after the published Notice of Intended Action, a written request for an opportunity to make oral presentations is submitted to the department by the administrative rules review committee, a governmental subdivision, an agency, an association having not less than 25 members, or at least 25 persons.

An oral proceeding may be scheduled or conducted by the board at the discretion of the board or of the chair of the board.

**401.105(3)** *Conduct of oral proceedings.*

*a.* *Applicability.* This subrule applies only to those oral rule-making proceedings in which an opportunity to make oral presentations is authorized or required by Iowa Code section 17A.4(1)*"b"* or this chapter.

*b.* *Scheduling and notice.* An oral proceeding on a proposed rule may be held in one or more locations and shall not be held earlier than 20 days after notice of its location and time is published in

the Iowa Administrative Bulletin. That notice shall also identify the proposed rule by ARC number and citation to the Iowa Administrative Bulletin.

*c. Presiding officer.* The agency rules administrator of the department of public safety or the administrator's designee shall preside at the oral proceeding on a proposed rule, unless the board conducts the oral proceeding. If the board does not conduct the oral proceeding, the presiding officer may prepare a memorandum for consideration by the board summarizing the contents of the presentations made at the oral proceeding if the administrator determines that such a memorandum would be helpful to the board.

*d. Conduct of proceeding.* At an oral proceeding on a proposed rule, persons may make oral statements and make documentary and physical submissions, which may include data, views, comments or arguments concerning the proposed rule. Persons wishing to make oral presentations at such a proceeding are encouraged to notify the department at least one business day prior to the proceeding and indicate the general subject of their presentations. At the proceeding, those who participate shall indicate their names and addresses, identify any persons or organizations they may represent, and provide any other information relating to their participation deemed appropriate by the presiding officer. Oral proceedings shall be open to the public and may be recorded by stenographic or electronic means.

(1) At the beginning of the oral proceeding, the presiding officer shall give a brief synopsis of the proposed rule, a statement of the statutory authority for the proposed rule, and the reasons for the decision to propose the rule. The presiding officer may place time limitations on individual oral presentations when necessary to ensure the orderly and expeditious conduct of the oral proceeding. To encourage joint oral presentations and to avoid repetition, additional time may be provided for persons whose presentations represent the views of other individuals as well as their own views.

(2) Persons making oral presentations are encouraged to summarize matters which have already been submitted in writing.

(3) The presiding officer shall have the authority to take any reasonable action necessary for the orderly conduct of the meeting.

(4) Physical and documentary submissions presented by participants in the oral proceeding shall be submitted to the presiding officer. Such submissions become the property of the system.

(5) The oral proceeding may be continued by the presiding officer to a later time without notice other than by announcement at the hearing. The presiding officer may provide for the record of an oral proceeding to be held open for a specific length of time, announced at the oral proceeding, to allow for the submission of additional information.

(6) Participants in an oral proceeding shall not be required to take an oath or to submit to cross-examination. However, the presiding officer in an oral proceeding may question participants and permit the questioning of participants by other representatives of the board who may be present about any matter relating to that rule-making proceeding, including any prior written submissions made by those participants in that proceeding; but no participant shall be required to answer any question.

(7) The presiding officer in an oral proceeding may permit rebuttal statements and request the filing of written statements subsequent to the adjournment of the oral presentations.

**401.105(4)** *Additional information.* In addition to receiving written comments and oral presentations on a proposed rule according to the provisions of this rule, the board may obtain information concerning a proposed rule through any other lawful means deemed appropriate under the circumstances.

**401.105(5)** *Accessibility.* The department shall schedule oral proceedings in rooms accessible to and functional for persons with physical disabilities. Persons who have special requirements should contact the Agency Rules Administrator, Department of Public Safety, Wallace State Office Building, Des Moines, Iowa 50319, by mail, by telephone at (515)281-5524, or by electronic mail at admrule@dps.state.ia.us, in advance to arrange access or other needed services.

**661—401.106(17A) Regulatory analysis.** The agency rules administrator shall prepare a regulatory analysis of proposed rules in compliance with Iowa Code section 17A.4A if requested pursuant to Iowa Code section 17A.4A, subsection 1.

**661—401.107(17A,25B) Fiscal impact statement.** For each Notice of Intended Action or emergency adoption of rules filed, the staff of the system and the department shall develop a fiscal impact statement in compliance with Iowa Code section 17A.4, subsection 3, and procedures established by the legislative services agency, if the preparation of a fiscal impact statement is required.

**661—401.108(17A) Time and manner of rule adoption.**

**401.108(1)** *Time of adoption.* The board shall not adopt a rule until the period for making written submissions and oral presentations has expired. Within 180 days after the later of the publication of the Notice of Intended Action, or the end of oral proceedings thereon, the board shall adopt a rule pursuant to the rule-making proceeding or terminate the proceeding by publication of a notice to that effect in the Iowa Administrative Bulletin.

EXCEPTION: The board may waive the notice requirements or time periods specified in Iowa Code chapter 17A, in compliance with Iowa Code section 17A.4, subsection 2, or Iowa Code section 17A.5, subsection 2, paragraph *"b,"* or both.

**401.108(2)** *Consideration of public comment.* Before the adoption of a rule, the board shall consider fully all of the written submissions and oral submissions received in that rule-making proceeding or any memorandum summarizing such oral submissions, and any regulatory analysis or fiscal impact statement issued in that rule-making proceeding.

**401.108(3)** *Reliance on department expertise.* Except as otherwise provided by law, the board may use its own experience, technical competence, specialized knowledge, and judgment, or that of department staff, in the adoption of a rule.

**401.108(4)** *Adoption by reference.* The board may, by adoption of an administrative rule, adopt by reference another document produced by the board, the department, another agency of Iowa government, a federal agency, or any other organization. If any document or portion of any document is adopted by reference and is not already available in the state law library, the department shall provide a copy of the document for filing in the state law library, in compliance with Iowa Code section 17A.6, subsection 4.

**661—401.109(17A) Variance between adopted rule and published notice of proposed rule adoption.**

**401.109(1)** The board shall not adopt a rule that differs from the rule proposed in the Notice of Intended Action on which the rule is based unless:

*a.* The differences are within the scope of the subject matter announced in the Notice of Intended Action and are in character with the issues raised in that notice; and

*b.* The differences are a logical outgrowth of the contents of that Notice of Intended Action and the comments submitted in response thereto; and

*c.* The Notice of Intended Action provided fair warning that the outcome of that rule-making proceeding could be the rule in question.

**401.109(2)** In determining whether the Notice of Intended Action provided fair warning that the outcome of that rule-making proceeding could be the rule in question, the board shall consider the following factors:

*a.* The extent to which persons who will be affected by the rule should have understood that the rule-making proceeding on which it is based could affect their interests;

*b.* The extent to which the subject matter of the rule or the issues determined by the rule are different from the subject matter or issues contained in the Notice of Intended Action; and

*c.* The extent to which the effects of the rule differ from the effects of the proposed rule contained in the Notice of Intended Action.

**401.109(3)** The board shall commence a rule-making proceeding within 60 days of its receipt of a petition for rule making seeking the amendment or repeal of a rule that differs from the proposed rule contained in the Notice of Intended Action upon which the rule is based, unless the board finds that the differences between the adopted rule and the proposed rule are so insubstantial as to make such a rule-making proceeding wholly unnecessary. A copy of any such finding and the petition to which it responds shall be sent to petitioner, the administrative rules coordinator, and the administrative rules review committee, within three days of its issuance.

**401.109(4)** Concurrent rule-making proceedings. Nothing in this rule disturbs the discretion of the board to initiate, concurrently, several different rule-making proceedings on the same subject with several different published Notices of Intended Action.

**661—401.110(17A) Concise statement of reasons.** When requested by a person, either prior to the adoption of a rule or within 30 days after its publication in the Iowa Administrative Bulletin as an adopted rule, the board shall issue a concise statement of reasons for the rule. Requests for such a statement must be in writing and be delivered to the Agency Rules Administrator, Department of Public Safety, Wallace State Office Building, Des Moines, Iowa 50319. The request should indicate whether the statement is sought for all or only a specified part of the rule. Requests will be considered made on the date received. After a proper request, the board shall issue a concise statement of reasons by the later of the time the rule is adopted or 35 days after receipt of the request. If the board does not meet during the time between the receipt of a request and the deadline for issuance of the concise statement, the staff may issue the concise statement with the approval of the board chair.

**661—401.111(17A,97A) Agency rule-making record.** The department shall maintain an official rule-making record for each rule proposed by the board by publication in the Iowa Administrative Bulletin of a Notice of Intended Action, or adopts. The rule-making record and materials incorporated by reference shall be available for public inspection. Requests to view material from the rule-making record may be addressed to the agency rules administrator of the department.

**661—401.112(17A,97A) Petitions for rule making.** Any person or agency may file a petition for rule making with the secretary at the location specified in rule 661—400.6(97A). A petition is deemed filed when it is received by the secretary. The secretary shall provide the petitioner with a file-stamped copy of the petition if the petitioner provides the agency an extra copy for this purpose. The secretary shall transmit a copy of the petition to the agency rules administrator. The petition must be typewritten or legibly handwritten in ink and should substantially conform to the following form:

PUBLIC SAFETY PEACE OFFICERS'
RETIREMENT, ACCIDENT, AND DISABILITY SYSTEM

| | |
|---|---|
| Petition by (name of petitioner) for the (adoption, amendment, or repeal) of rules relating to (state subject matter). | PETITION FOR RULE MAKING |

The petition must provide the following information:

1. A statement of the specific rule-making action sought by the petitioner including the text or a summary of the contents of the proposed rule or amendment to a rule and, if it is a petition to amend or repeal a rule, a citation and the relevant language to the particular portion or portions of the rule proposed to be amended or repealed.
2. A citation to any law deemed relevant to the board's authority to take the action urged or to the desirability of that action.
3. A brief summary of petitioner's arguments in support of the action urged in the petition.
4. A brief summary of any data supporting the action urged in the petition.
5. The names and addresses of other persons, or a description of any class of persons, known by petitioner to be affected by or interested in the proposed action which is the subject of the petition.
6. Any request by petitioner for a meeting provided for by subrule 401.112(5).

**401.112(1)** The petition must be dated and signed by the petitioner or the petitioner's representative. It must also include the name, mailing address, and telephone number of the petitioner and petitioner's representative, and a statement indicating the person to whom communications concerning the petition should be directed.

**401.112(2)** The board may deny a petition because it does not substantially conform to the required form. However, the board may consider any petition received, regardless of errors or variations in form, provided that the content of the request for rule making is clear or has been clarified through

communication with the petitioner. Denial of a petition because it does not substantially conform to the required form does not preclude the filing of a new petition on the same subject that seeks to eliminate the grounds for the board's rejection of the petition.

**401.112(3)** The petitioner may attach a brief to the petition in support of the action urged in the petition. The board may request a brief from the petitioner or from any other person concerning the substance of the petition.

**401.112(4)** Inquiries concerning the status of a petition for rule making may be made to the Agency Rules Administrator, Department of Public Safety, Wallace State Office Building, Des Moines, Iowa 50319, or via electronic mail at admrule@dps.state.ia.us.

**401.112(5)** Upon request by petitioner in the petition, the chair of the board may schedule a brief and informal meeting between the petitioner and the board, a member of the board, the secretary, or other staff of the department to discuss the petition. Such meeting shall include the agency rules administrator of the department or another employee of the department knowledgeable about the administrative rule-making process who is jointly designated by the agency rules administrator and the director of the administrative services division of the department. The board may request the petitioner to submit additional information or argument concerning the petition. The board may also solicit comments from any person on the substance of the petition. Also, comments on the substance of the petition may be submitted to the board by any person.

**401.112(6)** Within 60 days after the filing of the petition, or within any longer period agreed to by the petitioner, the board shall, in writing, deny the petition and notify petitioner of its action and the specific grounds for the denial or grant the petition and notify petitioner that it will institute rule-making proceedings on the subject of the petition. Notice shall be sent by the secretary to the petitioner by regular mail. Petitioner shall be deemed notified of the denial or granting of the petition on the date when the secretary mails the required notification to the petitioner.

**401.112(7)** Inquiries concerning the status of a petition for rule making may be made to the Agency Rules Administrator, Department of Public Safety, Wallace State Office Building, Des Moines, Iowa 50319, or by electronic mail to admrule@dps.state.ia.us.

**661—401.113(17A,97A) Waivers of rules.** This rule outlines generally applicable standards and a uniform process for the granting of individual waivers from rules adopted by the board. To the extent another more specific provision of law governs the issuance of a waiver from a particular rule, the more specific provision shall supersede this rule with respect to any waiver from the rule in question.

**401.113(1)** *Requests for waivers.* Requests for waivers of rules shall be addressed to the secretary. A request shall state specifically what provisions are requested to be waived, a concise statement of the reasons for requesting the waiver, and any conditions proposed to be placed on the waiver, including conditions which would substitute for compliance with the provisions requested to be waived.

**401.113(2)** *Applicability of rule.* The board may grant a waiver from a rule only if the board has jurisdiction over the rule and the requested waiver is consistent with applicable statutes, constitutional provisions, or other provisions of law. The board may not waive requirements created or duties imposed by statute.

**401.113(3)** *Criteria for waiver or variance.* In response to a petition completed pursuant to this rule, the board may, in its sole discretion, issue an order waiving, in whole or in part, the requirements of a rule if the board finds, based on clear and convincing evidence, all of the following:

*a.* The application of the rule would impose an undue hardship on the person for whom the waiver is requested;

*b.* The waiver from the requirements of the rule in the specific case would not prejudice the substantial legal rights of any person;

*c.* The provisions of the rule subject to the petition for a waiver are not specifically mandated by statute or another provision of law; and

*d.* Substantially equal protection of public health, safety, and welfare will be afforded by a means other than that prescribed in the particular rule for which the waiver is requested.

**401.113(4)** *Filing of petition.* A petition for a waiver must be submitted in writing to the board as follows:

*a.* If the petition relates to a pending contested case, the petition shall be filed in the contested case proceeding, using the caption of the contested case.

*b.* If the petition does not relate to a pending contested case, the petition may be submitted with a caption containing the name of the person for whom the waiver is requested.

*c.* A petition is deemed filed when it is received in the secretary's office. A petition should be sent to the Board of Trustees, Peace Officers' Retirement, Accident, and Disability System, Attention: Secretary of the Board, Wallace State Office Building, Des Moines, Iowa 50319-0050.

**401.113(5)** *Content of petition.* A petition for waiver shall include the following information where applicable and known to the requester:

*a.* The name, address, telephone number, and electronic mail address of the entity or person for whom a waiver is being requested; the case number of or other reference to any related contested case; and the name, address, and telephone number of the petitioner's legal representative, if any.

*b.* A description of and citation to the specific rule from which a waiver is requested.

*c.* The specific waiver requested, including the precise scope and duration.

*d.* The relevant facts that the petitioner believes would justify a waiver under each of the four criteria described in subrule 401.113(3). This statement shall include a signed statement from the petitioner attesting to the accuracy of the facts provided in the petition, and a statement of reasons that the petitioner believes will justify a waiver.

*e.* A history of any prior contacts between the board, other departments or agencies of the state of Iowa, or political subdivisions and the petitioner relating to benefits or potential benefits or eligibility requirements affected by the proposed waiver, including a description of each affected benefit or eligibility requirement held or requested by the requester, any formal charges filed, notices of violation, contested case hearings, or investigations relating to the membership in the system within the last five years.

*f.* Any information known to the requester regarding the board's action in similar cases.

*g.* The name, address, and telephone number of any public agency or political subdivision which might be affected by the granting of a waiver.

*h.* The name, address, and telephone number of any entity or person who would be adversely affected by the granting of a petition. This does not create any duty to individually notify other members of the system, unless they are known to have requested or received a waiver of the identical provisions.

*i.* The name, address, and telephone number of any person with knowledge of the relevant facts relating to the proposed waiver.

*j.* Signed releases of information authorizing persons with knowledge regarding the request to furnish the board with information relevant to the waiver.

**401.113(6)** *Additional information.* Prior to issuing an order granting or denying a waiver, the board may request additional information from the petitioner relative to the petition and surrounding circumstances. If the petition was not filed in a contested case, the board may, on its own motion or at the petitioner's request, schedule a telephonic or in-person meeting between the petitioner and a representative or representatives of the board related to the waiver request.

**401.113(7)** *Notice.* The secretary shall acknowledge a petition upon receipt and shall notify the members of the board, the legal counsel to the board and the agency rules administrator of the department of the receipt of the petition as soon as practical after its receipt. The board shall ensure that, within 30 days of the receipt of the petition, notice of the pending petition and a concise summary of its contents have been provided to all persons to whom notice is required by any provision of law, including the petitioner. In addition, the board may give notice to any other person. To accomplish this notice provision, the board may require the petitioner to serve the notice on all persons to whom notice is required by any provision of law and to provide a written statement to the board attesting that notice has been provided.

**401.113(8)** *Hearing procedures.* The provisions of Iowa Code sections 17A.10 to 17A.18A regarding contested case hearings shall apply to any petition for a waiver filed within a contested case,

and shall otherwise apply to board proceedings for a waiver only when the board so provides by order or is required to do so by statute.

**401.113(9)** *Ruling.* An order granting or denying a waiver shall be in writing and shall contain a reference to the particular person or legal entity and rule or portion thereof to which the order pertains, a statement of the relevant facts and reasons upon which the action is based, and a description of the precise scope and duration of the waiver if one is issued.

*a. Board discretion.* The final decision on whether the circumstances justify the granting of a waiver shall be made at the sole discretion of the board, upon consideration of all relevant factors. Each petition for a waiver shall be evaluated by the board based on the unique, individual circumstances set out in the petition.

*b. Burden of persuasion.* The burden of persuasion rests with the petitioner to demonstrate by clear and convincing evidence that the board should exercise its discretion to grant a waiver from a rule.

*c. Narrowly tailored exception.* A waiver, if granted, shall provide the narrowest exception possible to the provisions of a rule.

*d. Administrative deadlines.* When the rule from which a waiver is sought establishes administrative deadlines, the board shall balance the special individual circumstances of the petitioner with the overall goal of uniform treatment of all similarly situated persons.

*e. Conditions.* The board may place on a waiver any condition that the board finds desirable to protect the public health, safety, and welfare.

*f. Time period of waiver.* A waiver shall not be permanent unless the petitioner can show that a temporary waiver would be impractical. If a temporary waiver is granted, there is no automatic right to renewal. At the sole discretion of the board, a waiver may be renewed if the board finds that grounds for a waiver continue to exist.

*g. Time for ruling.* The board shall grant or deny a petition for a waiver as soon as practical but, in any event, shall do so within 120 days of its receipt, unless the petitioner agrees to a later date. However, if a petition is filed in a contested case, the board shall grant or deny the petition no later than the time at which the final decision in that contested case is issued.

*h. When deemed denied.* Failure of the board to grant or deny a petition within the required time period shall be deemed a denial of that petition by the board. However, the board shall remain responsible for issuing an order denying a waiver.

*i. Service of order.* Within seven days of its issuance, any order issued under this rule shall be transmitted or delivered to the petitioner or the person to whom the order pertains, and to any other person entitled to such notice by any provision of law. A copy of the order shall be provided to the agency rules administrator of the department to facilitate compliance with this rule.

**401.113(10)** *Indexing.* All orders granting or denying a waiver petition shall be indexed, filed, and available for public inspection as provided in Iowa Code section 17A.3. Petitions for a waiver and orders granting or denying a waiver petition are public records under Iowa Code chapter 22. If petitions or orders may contain information the board is authorized or required to keep confidential, the board may instruct the secretary to accordingly redact confidential information from petitions or orders prior to public inspection.

**401.113(11)** *Summary reports.* Summary information identifying the rules for which a waiver has been granted or denied, the number of times a waiver was granted or denied for each rule, a citation to the statutory provisions implemented by these rules, and a general summary of the reasons justifying the board's actions on waiver requests shall be included in semiannual reports prepared by the agency rules administrator of the department which contain such information for administrative rules of the department.

**401.113(12)** *Cancellation of a waiver.* A waiver issued by the board pursuant to this chapter may be withdrawn, canceled, or modified if, after appropriate notice and hearing, the board issues an order finding any of the following:

*a.* The petitioner or the person who was the subject of the waiver order withheld or misrepresented material facts relevant to the propriety or desirability of the waiver; or

*b.* The alternative means for ensuring that the public health, safety and welfare will be adequately protected after issuance of the waiver order have been demonstrated to be insufficient; or

*c.* The subject of the waiver order has failed to comply with all conditions contained in the order.

**401.113(13)** *Violations.* Violation of a condition in a waiver order shall be treated as a violation of the particular rule for which the waiver was granted. As a result, the recipient of a waiver under this rule who violates a condition of the waiver may be subject to the same remedies or penalties as a person who violates the rule at issue.

**401.113(14)** *Defense.* After the board issues an order granting a waiver, the order is a defense within its terms and the specific facts indicated therein only for the person to whom the order pertains in any proceeding in which the rule in question is sought to be invoked.

**401.113(15)** *Judicial review.* Judicial review of the board's decision to grant or deny a waiver petition may be taken in accordance with Iowa Code chapter 17A.

**401.113(16)** *Sample petition for waiver.* A petition for waiver filed in accordance with this rule must meet the requirements specified herein and must substantially conform to the following form:

PUBLIC SAFETY PEACE OFFICERS'
RETIREMENT, ACCIDENT, AND DISABILITY SYSTEM

| | |
|---|---|
| Petition by (name of petitioner) for the waiver/variance of (insert rule citation) relating to (insert the subject matter). } | PETITION FOR WAIVER/VARIANCE |

1. Provide the name, address, and telephone number of the petitioner (person asking for a waiver or variance). Also provide the name, address, and telephone number of the petitioner's legal representative, if applicable, and a statement indicating the person to whom communications concerning the petition should be directed.

2. Describe and cite the specific rule from which a waiver is requested.

3. Describe the specific waiver requested, including the precise scope and time period for which the waiver will extend.

4. Explain the relevant facts and reasons that the petitioner believes justify a waiver. Include in the answer all of the following:

- Why application of the rule would result in undue hardship to the petitioner;
- Why waiver of the rule would not prejudice the substantial legal rights of any person;
- Whether the provisions of the rule subject to the waiver are specifically mandated by statute or another provision of law; and
- How substantially equal protection of public health, safety, and welfare will be afforded by a means other than that prescribed in the particular rule for which the waiver is requested.

5. Provide a history of any prior contacts between the board, other departments or agencies of the state of Iowa, or political subdivisions and petitioner relating to the benefits or rights affected by the requested waiver. Include a description of each contested case hearing held, or any investigations related to the benefits or rights.

6. Provide information known to the petitioner regarding the board's action in similar cases.

7. Provide the name, address, and telephone number of any public agency or political subdivision that also regulates the activity in question or that might be affected by the granting of the petition.

8. Provide the name, address, and telephone number of any person or entity that would be adversely affected by the granting of the waiver or variance.

9. Provide the name, address, and telephone number of any person with knowledge of the relevant facts relating to the proposed waiver.

10. Provide signed releases of information authorizing persons with knowledge regarding the request to furnish the board with information relevant to the waiver.

I hereby attest to the accuracy and truthfulness of the above information.

(Date) (Petitioner's Signature)

**661—401.114** to **401.200** Reserved.

DECLARATORY ORDERS

**661—401.201(17A) Petition for declaratory order.** Any person may file with the secretary a petition to the board for a declaratory order as to the applicability to specified circumstances of a statute, rule, or order within the primary jurisdiction of the board. A petition is deemed filed when it is received by that office. The secretary shall provide the petitioner with a file-stamped copy of the petition if the petitioner provides the agency an extra copy for this purpose. The petition must be typewritten or legibly handwritten in ink and must substantially conform to the following form:

PUBLIC SAFETY PEACE OFFICERS'
RETIREMENT, ACCIDENT, AND DISABILITY SYSTEM

| | |
|---|---|
| Petition by (Name of Petitioner) for a Declaratory Order on (Cite provisions of law involved). | PETITION FOR DECLARATORY ORDER |

The petition must provide the following information:

1. A clear and concise statement of all relevant facts on which the order is requested.
2. A citation and the relevant language of the specific statutes, rules, policies, decisions, or orders, whose applicability is questioned, and any other relevant law.
3. The questions petitioner wants answered, stated clearly and concisely.
4. The answers to the questions desired by the petitioner and a summary of the reasons urged by the petitioner in support of those answers.
5. The reasons for requesting the declaratory order and disclosure of the petitioner's interest in the outcome.
6. A statement indicating whether the petitioner is currently a party to another proceeding involving the questions at issue and whether, to the petitioner's knowledge, those questions have been decided by, are pending determination by, or are under investigation by, any governmental entity.
7. The names and addresses of other persons, or a description of any class of persons, known by petitioner to be affected by, or interested in, the questions presented in the petition.
8. Any request by petitioner for a meeting provided for by rule 401.207(17A).

The petition must be dated and signed by the petitioner or the petitioner's representative. It must also include the name, mailing address, and telephone number of the petitioner and petitioner's representative and a statement indicating the person to whom communications concerning the petition should be directed.

**661—401.202(17A) Notice of petition.** Within 15 days after receipt of a petition for a declaratory order, the department shall give notice of the petition to all persons not served by the petitioner pursuant to rule 401.206(17A) to whom notice is required by any provision of law. The department may also give notice to any other persons.

**661—401.203(17A) Intervention.**

**401.203(1)** Any person who qualifies under any applicable provision of law as an intervenor and who files a petition for intervention within 20 days of the filing of a petition for declaratory order (after time for notice under rule 401.202(17A) and before 30-day time for agency action under rule 401.208(17A)) shall be allowed to intervene in a proceeding for a declaratory order.

**401.203(2)** Any person who files a petition for intervention at any time prior to the issuance of an order may be allowed to intervene in a proceeding for a declaratory order at the discretion of the department.

**401.203(3)** A petition for intervention shall be filed with the secretary. Such a petition is deemed filed when it is received by the secretary. The department shall provide the petitioner with a file-stamped copy of the petition for intervention if the petitioner provides an extra copy for this purpose. A petition

for intervention must be typewritten or legibly handwritten in ink and must substantially conform to the following form:

PUBLIC SAFETY PEACE OFFICERS'
RETIREMENT, ACCIDENT, AND DISABILITY SYSTEM

| | |
|---|---|
| Petition by (Name of Original Petitioner) for a Declaratory Order on (Cite provisions of law cited in original petition). | PETITION FOR INTERVENTION |

The petition for intervention must provide the following information:

1. Facts supporting the intervenor's standing and qualifications for intervention.
2. The answers urged by the intervenor to the question or questions presented and a summary of the reasons urged in support of those answers.
3. Reasons for requesting intervention and disclosure of the intervenor's interest in the outcome.
4. A statement indicating whether the intervenor is currently a party to any proceeding involving the questions at issue and whether, to the intervenor's knowledge, those questions have been decided by, are pending determination by, or are under investigation by, any governmental entity.
5. The names and addresses of any additional persons, or a description of any additional class of persons, known by the intervenor to be affected by, or interested in, the questions presented.
6. Whether the intervenor consents to be bound by the determination of the matters presented in the declaratory order proceeding.

The petition must be dated and signed by the intervenor or the intervenor's representative. It must also include the name, mailing address, and telephone number of the intervenor and intervenor's representative, and a statement indicating the person to whom communications should be directed.

**661—401.204(17A) Briefs.** The petitioner or any intervenor may file a brief in support of the position urged. The department may request a brief from the petitioner, any intervenor, or any other person concerning the questions raised.

**661—401.205(17A) Inquiries.** Inquiries concerning the status of a declaratory order proceeding may be made to the secretary.

**661—401.206(17A) Service and filing of petitions and other papers.**

**401.206(1)** *When service required.* Except where otherwise provided by law, every petition for declaratory order, petition for intervention, brief, or other paper filed in a proceeding for a declaratory order shall be served upon each of the parties of record to the proceeding, and on all other persons identified in the petition for declaratory order or petition for intervention as affected by or interested in the questions presented, simultaneously with their filing. The party filing a document is responsible for service on all parties and other affected or interested persons.

**401.206(2)** *Filing—when required.* All petitions for declaratory orders, petitions for intervention, briefs, or other papers in a proceeding for a declaratory order shall be filed with the secretary. All petitions, briefs, or other papers that are required to be served upon a party shall be filed simultaneously with the secretary.

**401.206(3)** *Method of service, time of filing, and proof of mailing.* Method of service, time of filing, and proof of mailing shall be as provided by subrule 401.301(7).

**661—401.207(17A) Consideration.** Upon request by petitioner, the department may schedule a brief and informal meeting between the original petitioner, all intervenors, and the board, a member of the board, or a member of the staff of the department to discuss the questions raised. The board may solicit comments from any person on the questions raised. Also, comments on the questions raised may be submitted to the board by any person.

**661—401.208(17A) Action on petition.**

**401.208(1)** Within the time allowed by Iowa Code section 17A.9(5), after receipt of a petition for a declaratory order, the commissioner of public safety or the commissioner's designee shall take action on the petition as required by Iowa Code section 17A.9(5).

**401.208(2)** The date of issuance of an order or of a refusal to issue an order is the date of mailing of a decision or order or date of delivery if service is by other means unless another date is specified in the order.

**661—401.209(17A) Refusal to issue order.**

**401.209(1)** The board shall not issue a declaratory order where prohibited by Iowa Code section 17A.9, subsection 1, and may refuse to issue a declaratory order on some or all questions raised for the following reasons:

*a.* The petition does not substantially comply with the required form.

*b.* The petition does not contain facts sufficient to demonstrate that the petitioner will be aggrieved or adversely affected by the failure of the board to issue an order.

*c.* The board does not have jurisdiction over the questions presented in the petition.

*d.* The questions presented by the petition are also presented in a current rule making, contested case, or other agency or judicial proceeding that may definitively resolve them.

*e.* The questions presented by the petition would more properly be resolved in a different type of proceeding or by another body with jurisdiction over the matter.

*f.* The facts or questions presented in the petition are unclear, overbroad, insufficient, or otherwise inappropriate as a basis upon which to issue an order.

*g.* There is no need to issue an order because the questions raised in the petition have been settled due to a change in circumstances.

*h.* The petition is not based upon facts calculated to aid in the planning of future conduct but is, instead, based solely upon prior conduct in an effort to establish the effect of that conduct or to challenge an agency decision already made.

*i.* The petition requests a declaratory order that would necessarily determine the legal rights, duties, or responsibilities of other persons who have not joined in the petition, intervened separately, or filed a similar petition and whose position on the questions presented may fairly be presumed to be adverse to that of petitioner.

*j.* The petitioner requests the board to determine whether a statute is unconstitutional on its face.

*k.* The petition relates to any criminal investigation.

*l.* The petition concerns any procedure or practice of the board or any other agency related to initiation or conduct of criminal investigations or referral of matters for possible criminal investigation or prosecution.

*m.* The petition states facts and circumstances which are theoretical in nature to the extent that issuance of a declaratory order is unlikely to assist in guiding future conduct or the petitioner is neither a person with interest in the operation of the system nor a representative of such a person. "Representative of such a person" includes any organization with members or participants who are active or retired members of the system, or family members or survivors of active or retired members of the system.

**401.209(2)** A refusal to issue a declaratory order shall indicate the specific grounds for the refusal, unless the refusal pertains to a matter under criminal investigation, or which has been referred for possible criminal prosecution, in which event no information which might compromise the investigation or prosecution shall be released to the petitioner or any intervenor. A refusal to issue a declaratory order constitutes final agency action on the petition.

**401.209(3)** Refusal to issue a declaratory order pursuant to this provision does not preclude the filing of a new petition that seeks to eliminate the grounds for the refusal to issue an order.

**661—401.210(17A) Contents of declaratory order—effective date.** In addition to the order itself, a declaratory order must contain the date of its issuance, the name of petitioner and all intervenors, the

specific statutes, rules, policies, decisions, or orders involved, the particular facts upon which it is based, and the reasons for its conclusion.

A declaratory order is effective on the date of issuance.

**661—401.211(17A) Copies of orders.** A copy of all orders issued in response to a petition for a declaratory order shall be mailed promptly to each original petitioner and to each intervenor.

**661—401.212(17A) Effect of a declaratory order.** A declaratory order has the same status and binding effect as a final order issued in a contested case proceeding. It is binding on the board, the petitioner, and any intervenors who consent to be bound and is applicable only in circumstances where the relevant facts and the law involved are indistinguishable from those on which the order was based. As to all other persons, a declaratory order serves only as precedent and is not binding on the board. The issuance of a declaratory order constitutes final agency action on the petition.

**661—401.213** to **401.300** Reserved.

CONTESTED CASES

**661—401.301(17A) Contested case proceeding.** Consideration of an appeal of a decision of the board shall be a contested case proceeding subject to the provisions of Iowa Code chapter 17A.

**401.301(1)** *Delivery of notice.* Delivery of the notice of hearing by the secretary constitutes the commencement of a contested case proceeding. Delivery may be executed by regular mail. The notice shall be delivered to the applicant, the applicant's attorney if known, and the assistant attorney general designated to represent the public interest.

**401.301(2)** *Contents of notice.* The notice of hearing shall contain a statement of the time, place, and nature of the hearing. The notice shall contain a statement that it is the applicant's burden to prove each of the statutory elements relative to the application. The notice shall also contain a reference to the applicable statute and rules.

**401.301(3)** *Scope of issues.* The applicant shall prove each of the statutory elements required before the application may be granted. Denial of an application shall be upheld based on the applicant's failure to prove any of the statutory elements. When an applicant has requested accidental disability benefits, the board has the option of denying accidental disability benefits, but granting ordinary disability benefits based on the evidence.

**401.301(4)** *Legal representation.* Following the filing of the notice of hearing, the office of the attorney general shall be responsible for the legal representation of the public interest in all proceedings before the board. The public interest, as referenced in this rule, shall include the responsibility to protect the assets of the system from applications that do not meet the standards set by the statute for disability benefits. Any private party to a contested case shall be entitled to legal representation at the discretion and expense of that party.

**401.301(5)** *Presiding officer.* The presiding officer in a contested case shall be an administrative law judge assigned by the department of inspections and appeals.

**401.301(6)** *Procedural matters.* Procedural matters and motions, including, but not limited to, motions to continue, may be heard and ruled upon by the presiding officer.

**401.301(7)** *Service and filing.*

*a. Service—when required.* Except where otherwise provided by law, every document filed in a contested case proceeding shall be served upon each of the parties of record to the proceeding, including the assistant attorney general designated as attorney for the state or the agency, simultaneously with their filing. Except for the original notice of hearing and an application for rehearing as provided in Iowa Code section 17A.16, subsection 2, the party filing a document is responsible for service on all parties.

*b. Service—how made.* Service upon a party represented by an attorney shall be made upon the attorney unless otherwise ordered. Service is made by personal delivery or by mailing a copy to the person's last-known address. Service by mail is complete upon mailing, except where otherwise specifically provided by statute, rule, or order.

*c.* *Filing—when required.* After the notice of hearing, all documents in a contested case proceeding shall be filed with the secretary. All documents that are required to be served upon a party shall be filed simultaneously with the secretary.

*d.* *Filing—when made.* Except where otherwise provided by law, a document is deemed filed at the time it is delivered to the secretary at the location set forth in rule 661—400.6(97A), delivered to an established courier service for immediate delivery to that office, or mailed by first-class mail or state interoffice mail to that office, so long as there is proof of mailing.

*e.* *Proof of mailing.* Proof of mailing includes either:

(1) A legible United States Postal Service postmark on the envelope;

(2) A certified mail return receipt;

(3) A notarized affidavit; or

(4) A certification in substantially the following form:

> I certify under penalty of perjury and pursuant to the laws of Iowa that, on (date of mailing), I mailed copies of (describe document) addressed to the Secretary of the Board of Trustees, Iowa Department of Public Safety, Peace Officers' Retirement System, Wallace State Office Building, Third Floor, Des Moines, Iowa 50319, and to the names and addresses of the parties listed below by depositing the same in (a United States post office mailbox with correct postage properly affixed or state interoffice mail).
>
> (Date) (Signature)

**661—401.302(17A) Discovery.**

**401.302(1)** Pursuant to Iowa Code chapter 17A, discovery procedures applicable in civil actions are applicable in contested cases. Unless lengthened or shortened by these rules or by order of the presiding officer, time periods for compliance with discovery shall be as provided in the Iowa Rules of Civil Procedure.

**401.302(2)** Any motion relating to discovery shall allege that the moving party has previously made a good-faith attempt to resolve the discovery issues involved with the opposing party. Motions in regard to discovery shall be ruled upon by the presiding officer. Opposing parties shall be afforded the opportunity to respond within ten days of the filing of the motion unless the time is shortened by order of the presiding officer. The presiding officer may rule on the basis of the written motion and any response, or may order argument on the motion.

**661—401.303(17A) Subpoenas in a contested case.** Pursuant to Iowa Code section 17A.13, subsection 1, the board or the presiding officer acting on behalf of the board has the authority to issue subpoenas to compel the attendance of witnesses at depositions or hearings and to compel the production of professional records, books, papers, correspondence and other records which are deemed necessary as evidence in connection with a contested case. A subpoena issued in a contested case under the board's authority may seek evidence whether or not privileged or confidential under law.

**401.303(1)** The board chair shall, upon the written request of the applicant or the state, issue a subpoena to compel the attendance of witnesses or to obtain evidence which is deemed necessary in connection with a contested case. A command to produce evidence may be joined with a command to appear at deposition or hearing or may be issued separately.

**401.303(2)** A request for a subpoena shall include the following information, as applicable, unless the subpoena is requested to compel testimony or documents for rebuttal or impeachment purposes:

*a.* The name, address and telephone number of the person requesting the subpoena;

*b.* The name and address of the person to whom the subpoena shall be directed;

*c.* The date, time, and location at which the person shall be commanded to attend and give testimony;

*d.* Whether the testimony is requested in connection with a deposition or hearing;

*e.* A description of the books, papers, records or other evidence requested;

*f.* The date, time and location for production, or inspection and copying.

**401.303(3)** Each subpoena shall contain, as applicable:

*a.* The caption of the case;

*b.* The name, address and telephone number of the person who requested the subpoena;

*c.* The name and address of the person to whom the subpoena is directed;

*d.* The date, time, and location at which the person is commanded to appear;

*e.* Whether the testimony is commanded in connection with a deposition or hearing;

*f.* A description of the books, papers, records or other evidence the person is commanded to produce;

*g.* The date, time and location for production, or inspection and copying;

*h.* The time within which a motion to quash or modify the subpoena must be filed;

*i.* The signature, address and telephone number of the board administrator or designee;

*j.* The date of issuance;

*k.* A return of service attached to the subpoena.

**401.303(4)** Unless a subpoena is requested to compel testimony or documents for rebuttal or impeachment purposes, the board administrator or designee shall mail copies of all subpoenas to the parties to the contested case. The person who requested the subpoena is responsible for serving the subpoena upon the subject of the subpoena.

**401.303(5)** Any person who is aggrieved or adversely affected by compliance with the subpoena or any party to the contested case who desires to challenge the subpoena must, within 14 days after service of the subpoena, or before the time specified for compliance if such time is less than 14 days, file with the board a motion to quash or modify the subpoena. The motion shall describe the legal reasons why the subpoena should be quashed or modified, and may be accompanied by legal briefs or factual affidavits.

**401.303(6)** Upon receipt of a timely motion to quash or modify a subpoena, the board chair shall request an administrative law judge to hold a hearing and issue a decision. Oral argument may be scheduled at the discretion of the board or the administrative law judge. The administrative law judge may quash or modify the subpoena or deny the motion.

**401.303(7)** A person aggrieved by a ruling of an administrative law judge who desires to challenge that ruling must appeal the ruling to the board by serving on the board's secretary, either in person or by certified mail, a notice of appeal within ten days after service of the decision of the administrative law judge. If the decision of the administrative law judge to quash or modify the subpoena or to deny the motion to quash or modify the subpoena is appealed to the board, the board may uphold or overturn the decision of the administrative law judge.

**401.303(8)** If the person contesting the subpoena is not the member whose application for benefits is the subject of the contested case, the board's decision is final for purposes of judicial review. If the person contesting the subpoena is the member whose application for benefits is the subject of the contested case, the board's decision is not final for purposes of judicial review until there is a final decision in the contested case.

**661—401.304(17A) Motions.**

**401.304(1)** No technical form for motions is required. However, prehearing motions must be in writing, state the grounds for relief, and state the relief sought.

**401.304(2)** Any party may file a written response to a motion within ten days after the motion is served, unless the time period is extended or shortened by rules of the board or the presiding officer. The presiding officer may consider a failure to respond within the required time period in ruling on a motion.

**401.304(3)** The presiding officer may schedule oral argument on any motion.

**401.304(4)** Motions pertaining to the hearing, except motions for summary judgment, must be filed and served at least ten days prior to the date of hearing unless there is good cause for permitting later action or the time for such action is lengthened or shortened by rule of the board or an order of the presiding officer.

**401.304(5)** Motions for summary judgment shall comply with the requirements of Iowa Rule of Civil Procedure 1.981 and shall be subject to disposition according to the requirements of that rule to the

extent such requirements are not inconsistent with the provisions of this rule or any other provision of law governing the procedure in contested cases.

Motions for summary judgment must be filed and served at least 45 days prior to the scheduled hearing date, or other time period determined by the presiding officer. Any party resisting the motion shall file and serve a resistance within 15 days, unless otherwise ordered by the presiding officer, from the date a copy of the motion was served. The time fixed for hearing or nonoral submission shall be not less than 20 days after the filing of the motion, unless a shorter time is ordered by the presiding officer. A summary judgment order rendered on all issues in a contested case is subject to rehearing pursuant to rule 401.314(17A) and appeal pursuant to subrule 401.312(2).

**661—401.305(17A) Settlements.** A contested case may be resolved by informal settlement, and settlements are encouraged. Settlement negotiations may be initiated at any stage of a contested case by the assistant attorney general appointed to represent the public interest or by the applicant. The board shall not be involved in negotiation until a written proposed settlement is submitted for approval, unless both parties waive this prohibition.

**661—401.306(17A) Prehearing conference.**

**401.306(1)** Any party may request a prehearing conference. A written request for prehearing conference or an order for prehearing conference on the presiding officer's own motion shall be filed not less than seven days prior to the hearing date. A prehearing conference shall be scheduled not less than three business days prior to the hearing date.

Written notice of the prehearing conference shall be given by the presiding officer to all parties. For good cause, the presiding officer may permit variances from this rule.

**401.306(2)** Each party shall bring to the prehearing conference:

*a.* A final list of the witnesses who the party anticipates will testify at hearing. Witnesses not listed may be excluded from testifying unless there was good cause for the failure to include their names.

*b.* A final list of exhibits which the party anticipates will be introduced at hearing. Exhibits other than rebuttal exhibits that are not listed may be excluded from admission into evidence unless there was good cause for the failure to include them.

*c.* Witness or exhibit lists may be amended subsequent to the prehearing conference within the time limits established by the presiding officer at the prehearing conference. Any such amendments must be served on all parties.

**401.306(3)** In addition to the requirements of subrule 401.306(2), the parties at a prehearing conference may:

*a.* Enter into stipulations of law or fact;

*b.* Enter into stipulations on the admissibility of exhibits;

*c.* Identify matters that the parties intend to request be officially noticed;

*d.* Enter into stipulations for waiver of any provision of law; and

*e.* Consider any additional matters that will expedite the hearing.

**401.306(4)** Prehearing conferences shall be conducted by telephone unless otherwise ordered. Parties shall exchange and receive witness and exhibit lists in advance of a telephone prehearing conference.

**661—401.307(17A) Continuances.** Unless otherwise provided, applications for continuances shall be made to the presiding officer.

**401.307(1)** A written application for a continuance shall:

*a.* Be made at the earliest possible time and no less than seven days before the hearing except in case of unanticipated emergencies;

*b.* State the specific reasons for the request; and

*c.* Be signed by the requesting party or the party's representative.

An oral application for a continuance may be made if the presiding officer waives the requirement for a written motion. However, a party making such an oral application for a continuance must confirm that

request by written application within five days after the oral request unless that requirement is waived by the presiding officer. No application for continuance shall be made or granted without notice to all parties except in an emergency where notice is not feasible. The presiding officer may waive notice of such requests for a particular case or an entire class of cases.

**401.307(2)** In determining whether to grant a continuance, the presiding officer may consider:

*a.* Prior continuances;

*b.* The interests of all parties;

*c.* The likelihood of informal settlement;

*d.* The existence of an emergency;

*e.* Any objection;

*f.* Any applicable time requirements;

*g.* The existence of a conflict in the schedules of counsel, parties, or witnesses;

*h.* The timeliness of the request; and

*i.* Other relevant factors.

The presiding officer may require documentation of any grounds for continuance.

**661—401.308(17A) Withdrawals.** A party requesting a contested case proceeding may withdraw that request prior to the hearing. Unless otherwise provided, a withdrawal shall be with prejudice.

**661—401.309(17A) Hearing procedures.**

**401.309(1)** The presiding officer shall have the authority to administer oaths, to admit or exclude testimony or other evidence, and to rule on all motions and objections.

**401.309(2)** All objections shall be timely made and stated on the record.

**401.309(3)** Parties have the right to participate or to be represented in all hearings or prehearing conferences related to their case. Any party may be represented by an attorney at the party's own expense.

**401.309(4)** Subject to terms and conditions prescribed by the presiding officer, parties have the right to introduce evidence on issues of material fact, cross-examine witnesses present at the hearing as necessary for a full and true disclosure of the facts, present evidence in rebuttal, and submit briefs and engage in oral argument.

**401.309(5)** The presiding officer shall maintain the decorum of the hearing and may refuse to admit or may expel anyone whose conduct is disorderly.

**401.309(6)** Witnesses may be sequestered during the hearing.

**401.309(7)** The presiding officer shall conduct the hearing in the following manner:

*a.* The presiding officer shall give an opening statement briefly describing the nature of the proceedings.

*b.* The parties shall be given an opportunity to present opening statements.

*c.* The parties shall present their cases in the sequence determined by the presiding officer.

*d.* Each witness shall be sworn or affirmed by the presiding officer or the court reporter, and be subject to examination and cross-examination. The presiding officer may limit questioning in a manner consistent with law.

*e.* When all parties and witnesses have been heard, the parties may be given the opportunity to present final arguments.

*f.* The presiding officer may enter a default judgment against a party who fails to appear at the hearing.

**401.309(8)** The presiding officer has the right to question a witness. Examination of witnesses by the presiding officer is subject to properly raised objections.

**401.309(9)** The hearing shall be open to the public, except as otherwise provided by law.

**401.309(10)** Oral proceedings shall be electronically recorded. Upon request, the board shall provide a copy of the whole or any portion of the audio recording at a reasonable cost. A certified shorthand reporter may be engaged to record the proceeding at the request of a party and at the expense of the party making the request. A transcription of the record of the hearing shall be made at the request of either party at the expense of the party making the request. The parties may agree to divide the cost

of the transcription. A record of the proceedings, which may be either the original recording, a copy, or a transcript, shall be retained by the secretary for five years after the resolution of the case.

**401.309(11)** Default.

*a.* If a party fails to appear or participate in a contested case proceeding after proper service of notice, the presiding officer may, if no adjournment is granted, enter a default decision or proceed with the hearing and render a decision in the absence of the party.

*b.* Where appropriate and not contrary to law, any party may move for default against a party who has requested the contested case proceeding and has failed to file a required pleading or has failed to appear after proper service.

*c.* Default decisions or decisions rendered on the merits after a party has failed to appear or participate in a contested case proceeding become final board action unless, within 15 days after the date of notification or mailing of the decision, a motion to vacate is filed and served on all parties or an appeal of a decision on the merits is timely initiated within the time provided by subrule 401.312(2). A motion to vacate must state all facts relied upon by the moving party which establish that good cause existed for that party's failure to appear or participate at the contested case proceeding. Each fact so stated must be substantiated by at least one sworn affidavit of a person with personal knowledge of each such fact, which affidavit(s) must be attached to the motion.

*d.* The time for further appeal of a decision for which a timely motion to vacate has been filed is stayed pending a decision on the motion to vacate.

*e.* Properly substantiated and timely filed motions to vacate shall be granted only for good cause shown. The burden of proof as to good cause is on the moving party. Adverse parties shall have ten days to respond to a motion to vacate. Adverse parties shall be allowed to conduct discovery as to the issue of good cause and to present evidence on the issue prior to a decision on the motion, if a request to do so is included in that party's response.

*f.* "Good cause" for purposes of this rule shall have the same meaning as "good cause" for setting aside a default judgment under Iowa Rule of Civil Procedure 1.977.

*g.* A decision denying a motion to vacate is subject to further appeal within the time limit allowed for further appeal of a decision on the merits in the contested case proceeding.

*h.* If a motion to vacate is granted and no timely interlocutory appeal has been taken, the presiding officer shall issue another notice of hearing and the contested case shall proceed accordingly.

*i.* A default decision may award any relief consistent with the request for relief made in the petition and embraced in its issues (but, unless the defaulting party has appeared, it cannot exceed the relief demanded).

**661—401.310(17A) Evidence.**

**401.310(1)** The presiding officer shall rule on admissibility of evidence and may, where appropriate, take official notice of facts in accordance with all applicable requirements of law.

**401.310(2)** Stipulation of facts is encouraged. The presiding officer may make a decision based on stipulated facts.

**401.310(3)** Evidence in the proceeding shall be confined to the contested issues as provided in Iowa Code section 97A.6.

**401.310(4)** The party seeking admission of an exhibit must provide opposing parties with an opportunity to examine the exhibit prior to the ruling on its admissibility. Copies of documents should normally be provided to opposing parties. All exhibits admitted into evidence shall be appropriately marked and be made part of the record.

**401.310(5)** Any party may object to specific evidence or may request limits on the scope of any examination or cross-examination. Such an objection shall be accompanied by a brief statement of the grounds upon which it is based. The objection, the ruling on the objection, and the reasons for the ruling shall be noted in the record. The presiding officer may rule on the objection at the time it is made or may reserve a ruling until the written decision.

**401.310(6)** Whenever evidence is ruled inadmissible, the party offering that evidence may submit an offer of proof on the record. The party making the offer of proof for excluded oral testimony shall

briefly summarize the testimony or, with permission of the presiding officer, present the testimony. If the excluded evidence consists of a document or exhibit, it shall be marked as part of an offer of proof and inserted in the record.

**661—401.311(17A) Ex parte communication.**

**401.311(1)** Prohibited communications. Unless required for the disposition of ex parte matters specifically authorized by statute, following issuance of the notice of hearing, there shall be no communication, directly or indirectly, between the presiding officer and any party or representative of any party or any other person with a direct or indirect interest in such case in connection with any issue of fact or law in the case except upon notice and opportunity for all parties to participate. Nothing in this rule is intended to preclude board members from communicating with other board members or members of the board staff, including the secretary, other than those with a personal interest in, or those engaged in personally investigating, prosecuting, or advocating in, either the case under consideration or a pending factually related case involving the same parties, as long as those persons do not directly or indirectly communicate to the presiding officer any ex parte communications they have received of a type that the presiding officer would be prohibited from receiving or that furnish, augment, diminish, or modify the evidence in the record.

**401.311(2)** Prohibitions on ex parte communications commence with the issuance of the notice of hearing in a contested case and continue for as long as the case is pending before the board.

**401.311(3)** Written, oral or other forms of communication are "ex parte" if made without notice and opportunity for all parties to participate.

**401.311(4)** To avoid prohibited ex parte communications, notice must be given in a manner reasonably calculated to give all parties a fair opportunity to participate. Notice of written communications shall be provided and may be supplemented by telephone, facsimile, electronic mail or other means of notification. Where permitted, oral communications may be initiated through conference telephone call including all parties or their representatives.

**401.311(5)** Persons who jointly act as presiding officer in a pending contested case may communicate with each other without notice or opportunity for parties to participate.

**401.311(6)** The secretary may be present in deliberations or otherwise advise the presiding officer without notice or opportunity for parties to participate as long as the secretary is not disqualified from participating.

**401.311(7)** Communications with the presiding officer involving uncontested scheduling or procedural matters do not require notice or opportunity for parties to participate. Parties should notify other parties prior to initiating such contact with the presiding officer when feasible, and shall notify other parties when seeking to continue hearings or other deadlines.

**401.311(8)** Disclosure of prohibited communications. A presiding officer who receives a prohibited ex parte communication during the pendency of a contested case must initially determine if the effect of the communication is so prejudicial that the presiding officer should be disqualified.

*a.* If the presiding officer determines that disqualification is warranted, a copy of any prohibited written communication, all written responses to the communication, a written summary stating the substance of any prohibited oral or other communication not available in written form for disclosure, all responses made, and the identity of each person from whom the presiding officer received a prohibited ex parte communication shall be submitted for inclusion in the record under seal by protective order; or

*b.* If the presiding officer determines that disqualification is not warranted, such documents shall be submitted for inclusion in the record and served on all parties. Any party desiring to rebut the prohibited communication must be allowed the opportunity to do so upon written request filed within ten days after notice of the communication.

**401.311(9)** Promptly after being assigned to serve as presiding officer at any stage in a contested case proceeding, a presiding officer shall disclose to all parties material factual information received through ex parte communication prior to such assignment, unless the factual information has already been or shortly will be disclosed pursuant to Iowa Code section 17A.13, subsection 2, or through discovery. Factual information contained in an investigative report or similar document need not be separately

disclosed by the presiding officer as long as such documents have been or will shortly be provided to the parties.

**401.311(10)** The presiding officer may render a proposed or final decision imposing appropriate sanctions for violations of this rule. Violation of ex parte communication prohibitions by staff shall be reported to the board and to the director of the administrative services division of the department.

**661—401.312(17A) Decisions.**

**401.312(1)** *Proposed decision.* The decision prepared by the presiding officer is a proposed decision. The proposed decision becomes the final decision of the board without further proceedings unless there is an appeal to, or review on motion of, the board within the time provided in subrule 401.312(2).

**401.312(2)** *Appeals and review.*

*a.* *Appeal by party.* Any adversely affected party may appeal a proposed decision to the board within 30 days after issuance of the proposed decision.

*b.* *Review.* The board may initiate review of a proposed decision on its own motion at any time within 30 days following the issuance of such a decision.

*c.* *Notice of appeal.* An appeal of a proposed decision is initiated by filing a timely notice of appeal with the board. The notice of appeal must be signed by the appealing party or a representative of that party and contain a certificate of service. The notice shall specify:

(1) The parties initiating the appeal;

(2) The proposed decision or order appealed from;

(3) The specific findings or conclusions to which exception is taken and any other exceptions to the decision or order;

(4) The relief sought;

(5) The grounds for relief.

*d.* *Requests to present additional evidence.* A party may request the taking of additional evidence only by establishing that the evidence is material, that good cause existed for the failure to present the evidence at the hearing, and that the party has not waived the right to present the evidence. A written request to present additional evidence must be filed with the notice of appeal or, by a nonappealing party, within 14 days of service of the notice of appeal. The board may remand a case to the presiding officer for further hearing or may itself preside at the taking of additional evidence.

*e.* *Scheduling.* The board shall issue a schedule for consideration of the appeal.

*f.* *Briefs and arguments.* Unless otherwise ordered, briefs, if any, must be filed within five days of meeting.

**661—401.313(17A) No factual dispute contested cases.** If the parties agree that no dispute of material fact exists as to a matter that would be a contested case if such a dispute of fact existed, the parties may present all relevant admissible evidence either by stipulation or otherwise as agreed by the parties without necessity for the production of evidence at an evidentiary hearing. If such agreement is reached, a jointly submitted schedule detailing the method and timetable for submission of the record, briefs and oral argument should be submitted to the presiding officer for approval as soon as practicable. If the parties cannot agree, any party may file and serve a motion for summary judgment pursuant to the rules governing such motions.

**661—401.314(17A) Applications for rehearing.**

**401.314(1)** *By whom filed.* Any party to a contested case proceeding may file an application for rehearing from a final order.

**401.314(2)** *Content of application.* The application for rehearing shall state on whose behalf it is filed, the specific grounds for rehearing, and the relief sought.

**401.314(3)** *Time of filing.* The application shall be filed with the board within 20 days after issuance of the final decision.

**401.314(4)** *Notice to other parties.* A copy of the application shall be timely mailed by the applicant to all parties of record not joining therein.

**401.314(5)** *Disposition.* The board may meet telephonically to consider an application for rehearing. Any application for a rehearing shall be deemed denied unless the board grants the application within 20 days after its filing.

These rules are intended to implement Iowa Code chapters 17A and 97A.

[Filed 10/5/04, Notice 8/18/04—published 10/27/04, effective 12/1/04]
[Filed 9/20/06, Notice 7/19/06—published 10/11/06, effective 12/1/06]

# CHAPTER 402
# PEACE OFFICERS' RETIREMENT, ACCIDENT, AND DISABILITY SYSTEM— ELIGIBILITY, BENEFITS, AND PAYMENTS

[Prior to 10/27/04, see 581—Ch 24]

**661—402.1** to **402.99** Reserved.

## DIVISION I
## ELIGIBILITY

**661—402.100(97A) Age of qualification.** The age of qualification for benefits under Iowa Code Supplement chapter 97A shall mean the age on the member's last birthday.

**661—402.101(97A) Date of retirement.** Date of retirement shall mean the first day on retirement and not the last day on duty.

**661—402.102(97A) Application of Iowa Code Supplement section 97A.6, subsection 12.** Iowa Code Supplement section 97A.6, subsection 12, applies to the deceased member's spouse and children only if the spouse was married to the deceased member at or before the time of retirement and the children are the natural children of the deceased member or were legally adopted at or before the time of retirement of the member. If there is no surviving spouse of a marriage solemnized prior to retirement of a deceased member, then "surviving spouse" means a surviving spouse of a marriage of two years or more solemnized subsequent to the retirement of the member.

**661—402.103(97A) Date of death.** In the event of the death of a member, the date of death will be considered to be the member's last day on the payroll for earned compensation or on pension, and the next day following will be the first day for the spouse's and children's benefits. The start of benefits shall not be delayed by the payout of any other compensation.

**661—402.104(97A) Age of spouse.** When the spouse of a deceased active member is to receive an annuity payment from the member's contributions, the age of the spouse at the spouse's nearest birthday shall govern. The computation shall be the spouse's birth date subtracted from the first date that spouse's benefits begin to accrue.

**661—402.105** to **402.199** Reserved.

## DIVISION II
## BENEFITS AND PAYMENTS

**661—402.200(97A) Computation of average final compensation.** Computation of the average final compensation shall be made using the earnable compensation of the member during the three years of the member's service as a member of the department during which the member received the highest amount of compensation. Overtime compensation, if any, and periods without pay shall not be considered in this computation.

EXCEPTION: If a member retires before attaining three years of service, the average final compensation shall be the total of the earnable compensation from the date the member was sworn into service divided by the number of months of service and multiplied by 12.

**661—402.201(97A) Workers' compensation—effect on benefit payment.** If workers' compensation benefits are payable because of a member's disability or death, the retirement or death benefit payable, other than a line-of-duty death benefit paid pursuant to 661—Chapter 403, from the system shall be reduced by the actuarial equivalent of the total workers' compensation.

**402.201(1)** Monthly peace officers' retirement system benefits shall be reduced by the monthly benefit received from workers' compensation.

**402.201(2)** Peace officers' retirement system benefits shall be reduced in the amount of permanent partial disability benefits paid by workers' compensation. Benefits will be withheld in the amount of permanent partial disability benefits.

**402.201(3)** Salary payments made by the department to a member in temporary incapacity status pursuant to the provisions of 661—Chapter 404 shall be reduced by the amount of any workers' compensation payments to the member received while the member is in temporary incapacity status.

**661—402.202(97A) Errors in payments.** If an error in payments already made to a member or beneficiary is discovered, arrangements shall be made to correct the error, either through recovery of overpayments from the member or beneficiary or through additional compensation paid to the member or beneficiary to adjust for underpayments. Schedules referenced in this rule shall commence only after presentation to and approval by the board of trustees.

**402.202(1)** As soon as practical after being discovered, underpayments shall be corrected through a lump-sum payment to the member or beneficiary in an amount equal to the total amount of underpayments to date and an amount of interest such that the total lump-sum payment is actuarially equivalent to the total amount of underpayments. The member or beneficiary may request a method of repayment other than a lump-sum payment, in which case a repayment schedule may be mutually agreed upon between the board and the member or beneficiary.

**402.202(2)** Overpayments other than those which resulted from fraudulent acts on the part of the member or beneficiary receiving the payments shall be recovered from the member or beneficiary. The preferred method of recovery, if the member or beneficiary is continuing to receive payments from the system, shall be withholding monthly an amount equivalent to the monthly average of the amount of overpayments during the period in which the overpayments were made, until total repayments equal a sum actuarially equivalent to the total amount of overpayment. If the member or beneficiary is not receiving payments from the system, the board may seek repayment in a lump sum including the amount of overpayments and interest in an amount such that the total repayment is actuarially equivalent to the total amount of overpayments, although the member or beneficiary may request a repayment schedule be established and the board may agree to do so.

**402.202(3)** An overpayment which resulted in whole or in part from a fraudulent act or acts on the part of the member or beneficiary receiving the payments shall be repaid to the system in an amount which is actuarially equivalent to the amount of the overpayment plus a reasonable assessment of the administrative costs to the system and the department to recover the overpayment. The preferred method of repayment is a lump-sum payment collected as soon as practical after the overpayment and the fraudulent act are discovered, although the board shall accept a repayment schedule established by a court which orders restitution in relation to a conviction stemming from the fraudulent act or acts. The board may agree to an alternative payment schedule at the request of the member or beneficiary if there is no applicable order of restitution.

The board may find, on the basis of clear and convincing evidence, that an overpayment resulted from a fraudulent act or acts on the part of a member or beneficiary. A conviction based upon a fraudulent act or acts committed in relation to the receipt of benefits from the system shall be prima facie evidence of fraud for purposes of this subrule.

**661—402.203(97A) Initial benefit for a child.** Initial benefit for a child as specified in Iowa Code Supplement section 97A.6, subsection 8, 9 or 12, shall be 6 percent of the monthly earnable compensation payable to an active member having the rank of senior trooper of the Iowa state patrol. A senior trooper, for the purposes of Iowa Code Supplement chapter 97A, is a peace officer having at least ten years of active service with the Iowa state patrol.

**661—402.204(97A) Computation for partial month.** Computation of retirement benefits for a partial month shall be based on the actual number of days in the month, i.e., monthly benefits divided by the number of days in the month multiplied by the number of days due.

**661—402.205(97A) One year of service.** For the purpose of computing service, service for fewer than six months of a year is not creditable as service. Service of six months or more in any year shall be equivalent to one year of service; however, in no case shall a member receive more than one year of service credit for each 12-month period of service.

**661—402.206(97A) Termination prior to retirement.**

**402.206(1)** Members who terminate covered employment prior to age 55 other than by death or disability have certain rights to their accumulated contributions.

*a.* A member with fewer than four years of service is not entitled to benefits under the system. A member terminating employment with less than four years of service has the following options for the handling of the member's contributions to the system:

(1) The member may withdraw the member's contributions along with accumulated interest.

(2) The member may have all or a part of the member's qualifying contributions along with accumulated interest rolled forward to a qualified retirement plan and may withdraw the balance of the member's contributions.

(3) The member may leave the member's contributions in the system as long as the member continues to be a member of the system. A member ceases to be a member of the system should the member in any period of five consecutive years after last becoming a member be absent from service for more than four years. Should a member cease to be a member, the member's contributions shall be paid to the member as provided in this paragraph.

*b.* A member with four or more years of service is a "vested member" and is entitled to benefits under the system. The member's options under the system are as follows:

(1) Upon attaining retirement age, the member may receive a service retirement allowance of four twenty-seconds of the retirement allowance the member would receive at retirement if the member's employment had not been terminated, and an additional one twenty-second of such retirement allowance for each additional year of service not exceeding 22 years of service. Should the member have over 22 years of service, upon the member's retirement there shall be added 2¾ percent of the member's average final compensation for each year over 22 years for up to 10 additional years of service. The amount of the retirement allowance shall be calculated in the manner provided in this subparagraph using the average final compensation at the time of termination of the member's employment.

(2) The member may withdraw the member's contributions pursuant to Iowa Code section 97A.16, along with accumulated interest.

(3) The member may have all or a part of the member's qualifying contributions along with accumulated interest rolled forward to a qualified retirement plan and may withdraw the balance of the member's contributions.

**402.206(2)** The interest rate shall be the composite rate of return for the fiscal year as reflected in the investment performance analysis, provided by the investment consultants for the system, as specified in the report for the quarter ending June 30 of the fiscal year, adjusted by the administrative expense of the system for the fiscal year. The administrative expense rate shall be calculated by dividing the actual administrative expense for the fiscal year by the fund balance on June 30 of the fiscal year.

**402.206(3)** Interest shall be credited to the member's account annually as of June 30. The interest credited to the member shall be calculated by multiplying the annual interest rate by the member's average balance for the fiscal year, with interest credited for each full month of membership.

**402.206(4)** Members withdrawing contributions under this rule shall submit a written request to the secretary.

**661—402.207(97A) Optional retirement benefits.** Members of the system who retire under a service retirement may elect to receive one of the following optional retirement benefits and have the optional retirement benefit or a designated fraction of the benefit paid to the member's beneficiary:

1. Straight life annuity.
2. Straight life annuity with five years certain.
3. Straight life annuity with ten years certain.

4. Joint and 50 percent survivor annuity.
5. Joint and 75 percent survivor annuity.
6. Joint and 100 percent survivor annuity.
7. Single life annuity with a designated lump sum.

For the purposes of this rule, a "beneficiary" means a member's spouse, child, or dependent parent.

**661—402.208(97A) Options not reversible once payments begin—exceptions.**

**402.208(1)** The member may change or cancel the member's selected optional benefit until the first monthly benefit payment is made using the selected option. After the first monthly payment to the member or beneficiary, the option shall become permanent and not subject to cancellation or change.

**402.208(2)** If a member dies without designating a beneficiary prior to receipt in benefits of an amount equal to the total amount in the member's credit at the time of separation from service, the election is void.

**402.208(3)** If a member who has designated a beneficiary dies and the beneficiary subsequently dies prior to receipt in benefits of an amount equal to the total amount in the member's credit at the time of separation from service, the election remains valid.

**661—402.209(97A) Method of calculating annual adjustments when optional retirement benefits are selected.** Whenever an optional benefit as provided for in rule 661—402.207(97A) has been selected by a member, the annual adjustments provided for in Iowa Code Supplement section 97A.6, subsection 14, shall continue to be provided.

**661—402.210(97A) Termination of benefits when optional retirement benefits are selected.** Whenever an optional benefit as provided for in rule 661—402.207(97A) has been selected by a member, benefit payments shall terminate as follows, except as provided in rule 661—402.208(97A):

1. Straight life annuity. Upon the death of the retired member, all future retirement payments shall cease.
2. Straight life annuity with five years certain. Upon the death of the retired member, or five years from the member's original retirement date, whichever is later, all future retirement payments shall cease.
3. Straight life annuity with ten years certain. Upon the death of the retired member, or ten years from the member's original retirement date, whichever is later, all future retirement payments shall cease.
4. Joint and 50 percent survivor annuity. Upon the death of the retired member, the surviving beneficiary shall have the beneficiary's annual annuity established at 50 percent of the member's amount. Upon the death of both the member and the beneficiary, all future retirement payments shall cease.
5. Joint and 75 percent survivor annuity. Upon the death of the retired member, the surviving beneficiary shall have the beneficiary's annual annuity established at 75 percent of the member's amount. Upon the death of both the member and the beneficiary, all future retirement payments shall cease.
6. Joint and 100 percent survivor annuity. Upon the death of the retired member, the surviving beneficiary shall have the annual annuity continue at the member's amount. Upon the death of both the member and the beneficiary, all future retirement payments shall cease.
7. Single life annuity with a designated lump sum. Upon the death of the retired member, the beneficiary shall receive the single lump-sum payment, and all future retirement payments shall cease.

**661—402.211(97A) Impact of optional benefit selections on child benefits.** The selection of an optional retirement benefit by a member shall not change the benefit that a child of a deceased member would otherwise be eligible to receive.

**661—402.212** to **402.299** Reserved.

DIVISION III
SERVICE PURCHASES

**661—402.300(97A) Purchase of eligible service credit.** Effective July 1, 2006, and no later than July 2, 2007, an active member may make contributions to the system to purchase up to the maximum amount of permissive service credit for eligible qualified service.

**661—402.301(97A) Determination of eligible service.**

**402.301(1)** *Eligible qualified service.*

*a.* Eligible qualified service is either of the following:

(1) Service with the department prior to July 1, 1994, in a position as a gaming enforcement officer, fire prevention inspector peace officer, or employee of the division of capitol police except clerical workers, for which service has not previously been credited.

(2) Service as a member of a city fire retirement system or police retirement system operating under Iowa code chapter 411 prior to January 1, 1992, for which service has not previously been credited.

*b.* Eligible qualified service does not include service if the receipt of credit for such service would result in the member's receiving a retirement benefit under more than one retirement plan for the same period of service.

**402.301(2)** *Permissive service credit.*

*a.* Permissive service credit is credit that will be recognized by the system for purposes of calculating a member's benefit, for which the member did not previously receive service credit in the system, and for which the member voluntarily contributes to the system the amount required by the system, not in excess of the amount necessary to fund the benefit attributable to such service.

*b.* Permissive service credit shall be calculated in years at the rate of one year of service for six months or more of a year actually worked with no more than one year of service to be credited for all service in one calendar year.

*c.* An active member may make contributions to the system to purchase up to the maximum amount of permissive service credit for eligible qualified service as determined by the system, pursuant to Internal Revenue Code Section 415(n).

**661—402.302(97A) Determination of cost to member.**

**402.302(1)** *Determination of service credit.* A member may determine the amount of permissive service credit for either or both types of eligible qualified service. Eligible qualified service shall be documented on forms provided by the secretary. Such documentation shall include the notarized certification by an official of the agency by which the member was employed. In the event that information is not available from the employing city or agency, documentation may be obtained from another authorized source acceptable to the department.

*a.* A member may obtain certification of prior service with the department, pursuant to paragraph 402.301(1)*"a,"* by submitting the request to the department. The department shall return the certification of service to the member.

*b.* A member may obtain certification of prior service with a city, pursuant to paragraph 402.301(1)*"b."* The member shall obtain such certification from the chief of police, fire chief, or other official of the city by which the member was employed with access to the employment records needed to verify eligible qualified service. In the event that certification from any such person is not available, documentation may be obtained from another authorized source acceptable to the department.

**402.302(2)** *Actuarial cost quote of permissive service credit.*

*a.* A member may submit certification of service credit to the department to obtain a cost quote of permissive service credit.

*b.* The department shall review and verify the submitted certification of service credit.

*c.* When service credit has been verified, the secretary shall submit it to the actuary contracted by the system to determine the cost to purchase permissive service credit. Requests received by the department from members on or before July 17, 2006; September 15, 2006; December 15, 2006; March

15, 2007; or May 15, 2007, shall be submitted to the actuary in groups of similarly submitted requests. A member may request cost quotes to purchase permissive service credit for a maximum of two time periods at no cost to the member.

*d.* If a member submits a request for the cost quote of permissive service credit to be processed at a time different from the group processing schedule in paragraph *"c,"* the member shall be required to pay for the cost of the quote.

*e.* If a member requests a third or subsequent cost quote, the member shall be required to pay for the cost of the quote.

*f.* A second or subsequent cost quote for the same time period of permissive service credit shall replace all previous cost quotes for that time period.

*g.* If the department does not verify the submitted certification of service credit, the secretary shall not submit the service credit to the actuary but rather shall refer it to the board for review at the next regularly scheduled meeting.

**661—402.303(97A) Application process.**

**402.303(1)** *Actuarial cost quote of permissive service credit.* When the cost quote of permissive service credit is returned to the secretary, it shall be forwarded to the member promptly. Such delivery may be made through electronic mail, facsimile transmission, regular mail, or personal service. The cost quote of permissive service credit shall remain valid for six months from the date of the cost quote unless replaced by a subsequent cost quote for the same time period of permissive service credit.

**402.303(2)** *Submission of application to purchase permissive service credit.* The member may submit to the secretary an application to purchase years of permissive service credit in an amount no greater than the maximum certified years of permissive service credit at a rate quoted by the actuary. Full payment in the form of a check or money order payable to the Peace Officers' Retirement, Accident, and Disability System, or certification of intent to pay through a qualified plan, or a combination thereof, shall accompany the application to purchase permissive service credit.

**402.303(3)** *Acceptance of application to purchase permissive service credit.* If the department accepts the application, the secretary, upon receipt of the full payment, shall deposit the payment in the system's accounts and shall adjust the member's time of service to reflect the increase in years of service under the system. Prior to the receipt of full payment, the secretary shall make no adjustment to the member's years of service.

**402.303(4)** *Rejection of application to purchase permissive service credit.* If the department rejects the application, the secretary shall return the payment to the member and shall refer the rejected application to the board for review at the next regularly scheduled meeting.

**661—402.304(97A) Service adjustment irrevocable.** An adjustment of a member's years of service which has been completed pursuant to subrule 402.303(3) is irrevocable. However, this rule shall not be interpreted to limit the system's ability to refund service credit purchase amounts when required in order to meet the provisions of the Internal Revenue Code.

**661—402.305(97A) Board review.**

**402.305(1)** *Rejection of certification of service credit.* The board shall review a rejected certification of service credit. If the board overrules the rejection, the secretary shall submit the certification of service credit to the actuary to determine the member's cost to purchase permissive service credit. If the board sustains the rejection, the member may appeal the action pursuant to rule 661—401.3(17A).

**402.305(2)** *Review of rejection of application to purchase service credit.* The board shall review any application to purchase service credit which has been rejected. If the board overrules the action, the secretary shall process the application pursuant to subrule 402.303(3). If the board sustains the rejection, the member may appeal the action pursuant to rule 661—401.3(17A).

**661—402.306(97A) Other provisions.**

**402.306(1)** Within 60 days following the entry of an adjustment to a member's years of service based on a purchase of permissive service credit, the secretary shall report the purchase to the system under which the service credit was originally earned.

NOTE: This notification is intended to meet the requirement that a member not receive a retirement benefit under more than one retirement plan for the same period of service.

**402.306(2)** The average final compensation of the member shall not be affected by the purchase of permissive service credit.

These rules are intended to implement Iowa Code Supplement chapter 97A.

[Filed 10/5/04, Notice 8/18/04—published 10/27/04, effective 12/1/04]
[Filed emergency 6/26/06—published 7/19/06, effective 7/1/06]
[Filed 9/20/06, Notice 7/19/06—published 10/11/06, effective 12/1/06]

# CHAPTER 403
# PEACE OFFICERS' RETIREMENT, ACCIDENT, AND DISABILITY SYSTEM— LINE-OF-DUTY DEATH BENEFIT

**661—403.1(97A) Member death benefit program.** As provided in Iowa Code Supplement section 97A.6, subsection 16, the board will administer the payment of line-of-duty death benefits to beneficiaries of members who die in the line of duty.

Information about the program may be obtained by mail from the Secretary of the Board of Trustees, Iowa Department of Public Safety, Peace Officers' Retirement System, Wallace State Office Building, Third Floor, Des Moines, Iowa 50319, by telephone at (515)281-8843, or by electronic mail to asdinfo@dps.state.ia.us.

**661—403.2(97A) Application.** Application forms for the line-of-duty death benefit program may be obtained on request from the secretary. The board may accept a legible copy of a completed application for the federal Public Safety Officer Benefits Program as an application for payment of benefits from the member death benefit program. Completed application forms shall be mailed or delivered to the Secretary of the Board of Trustees, Iowa Department of Public Safety, Peace Officers' Retirement System, Wallace State Office Building, Third Floor, Des Moines, Iowa 50319.

**661—403.3(97A) Determination.** After receiving a completed application for benefits from the member death benefit program, the board shall make a determination as to whether or not the application meets the requirements for payment of benefits. Prior to making a determination, the board may require the beneficiary or responsible supervisory official who has certified that the death is a line-of-duty death to submit any additional information that the board deems material to making the determination. If the determination is that the requirements for payment of benefits have been met, the board shall so notify the beneficiary or cobeneficiaries and shall instruct the secretary to prepare documents to cause the department of administrative services to issue a warrant payable to the beneficiary in the amount of the lump-sum payment provided or, if there are cobeneficiaries, to issue warrants in equal shares of the lump-sum amount payable to each of the cobeneficiaries. Payments pursuant to this rule shall come from the system's funds.

**403.3(1)** *Denial and notification.* If the board determines that the eligibility criteria have not been met, the board shall notify in writing the beneficiary or cobeneficiaries and the responsible supervisory official who certified that the death occurred in the line of duty of the determination and of the reason or reasons for the denial.

**403.3(2)** *Appeals.* If an application for benefits is denied, the beneficiary or any cobeneficiary may appeal that decision to the board by filing an appeal in writing to the secretary within 30 days of the date of the denial of the application by the board. Appeals shall be processed in accordance with contested case procedures specified in 661—Chapter 401.

These rules are intended to implement Iowa Code Supplement section 97A.6A(16).

[Filed 10/5/04, Notice 8/18/04—published 10/27/04, effective 12/1/04]

# CHAPTER 404
# PEACE OFFICERS' RETIREMENT, ACCIDENT, AND DISABILITY SYSTEM—TEMPORARY INCAPACITY

**661—404.1(97A) Temporary incapacity defined.** Temporary incapacity is defined as a condition from which a member in service becomes incapacitated for duty as a natural and proximate result of an injury, disease, or exposure incurred or aggravated while in the actual performance of duty at some definite time and place.

**661—404.2(97A) Application for temporary incapacity status.** An application for temporary incapacity status may be filed in accordance with rule 661—401.1(97A). The application must be filed by the member or by a person with legal standing in relation to the member in the event that the member is unable to do so. It shall be accompanied by a copy of the first report of injury, if one is available; workers' compensation medical reports and determinations; and all other workers' compensation documents related to the injury or other medical reports and records as may be available.

An application may be filed at any time; however, it shall not become effective until all of the elements of temporary incapacity have been met. If the incapacity has ended by the time the application is made, then the application for temporary incapacity status shall include a medical release to return to duty.

**661—404.3(97A) Processing applications for temporary incapacity status.** Applications for temporary incapacity status shall be processed in accordance with rule 661—401.2(97A). Available workers' compensation medical records, as well as other medical reports and records as may be available and acceptable to the board of trustees, shall serve as the basis for medical evaluation to determine the status of the applicant.

**661—404.4(97A) Actions by the board.** The board of trustees may accept the application as submitted and grant temporary incapacity, may reject the application for temporary incapacity status or may delay action on the application.

The board may at any time direct further medical examination of a member who is in temporary incapacity status, or who has an application pending for temporary incapacity status, by a physician or physicians, or other appropriate licensed health care providers.

**661—404.5(97A) Sick leave.** When temporary incapacity is granted, the member will no longer be charged sick leave and will have sick leave that has been used to date during the period of incapacity reinstated. No other form of leave utilized prior to a determination by the board will be reinstated. Holidays occurring during a period of temporary incapacity shall be used as holiday time. The department shall pay the difference between the workers' compensation salary and the member's regular salary including any adjustments that occur during the time of temporary incapacity. In the event that a member does not have sufficient sick leave to ensure complete pay until action is taken by the board on the temporary incapacity application, a special board meeting shall be called to consider an application for temporary incapacity as soon as practical.

**661—404.6(97A) Recurrences.** If a member is incapacitated as a result of a previous work-related injury for which temporary incapacity had been granted and from which the member has been released, then the member must file a new application to be eligible for temporary incapacity status.

**661—404.7(97A) Review.** The status of each application for temporary incapacity which has been previously approved shall be reviewed at least quarterly by the board of trustees until the member is released from temporary incapacity status, unless the board establishes a different period for review for an individual case. Approval may be either continued or terminated as a result of the review. The board may also direct further medical examination.

If a member currently in temporary incapacity status returns to work, a copy of the member's medical release shall be submitted to the secretary. The board shall review the member's temporary incapacity status as soon as practical after receipt of the medical release.

**661—404.8(97A) Discontinuance of temporary incapacity status.**

**404.8(1)** Action by the board that results in the approval of disability benefits shall result in the immediate termination of temporary incapacity status.

**404.8(2)** Disapproval of an application for disability benefits shall result in an immediate review of the member's temporary incapacity status. If the temporary incapacity status is discontinued based on that review and if the disapproval of disability benefits is reversed on appeal, then the benefits that would have been accrued for temporary incapacity shall be restored.

**404.8(3)** The commissioner shall file an application for disability retirement when it is medically determined that a member in temporary incapacity status is permanently disabled.

**661—404.9(97A) Appeals.** Decisions of the board to deny or discontinue temporary incapacity status may be appealed in accordance with the procedures established in 661—Chapter 401.

These rules are intended to implement Iowa Code Supplement section 97A.5, subsection 5, paragraph *"b."*

[Filed 10/5/04, Notice 8/18/04—published 10/27/04, effective 12/1/04]

CHAPTERS 405 to 499
Reserved

# CHAPTER 500
# ELECTRICIAN AND ELECTRICAL CONTRACTOR LICENSING PROGRAM—ORGANIZATION AND ADMINISTRATION

**661—500.1(82GA,ch197) Establishment of program.** The electrician and electrical contractor licensing program is established in the fire marshal division of the department of public safety. The program is under the direction of the electrical examining board and the daily supervision of the state fire marshal or the state fire marshal's designee.

**500.1(1)** *Electrical examining board.* The electrical examining board, appointed by the governor, directs the electrician and electrical contractor licensing program, adopts administrative rules governing the program, establishes licensing requirements, and administers discipline related to licensure and to those engaged in activities requiring licensure but who are not licensed.

**500.1(2)** *Executive secretary.* The electrical examining board shall appoint an executive secretary who shall be responsible for carrying out the policies of the board and for hiring and supervising additional administrative staff.

**500.1(3)** *Board office.* The board office is located within the fire marshal division of the department of public safety.

*a.* The address of the board office is as follows:

Electrical Examining Board
Iowa Department of Public Safety
215 East 7th Street
Des Moines, Iowa 50319

*b.* The board may be contacted by telephone through the fire marshal division at (515)725-6145 or by E-mail at elecinfo@dps.state.ia.us.

**661—500.2(82GA,ch197) Definitions.** The following definitions apply to all rules adopted by the electrical examining board.

*"Approved by the board"* means the approval of any item, test or procedure by the electrical examining board by adoption of a resolution at a meeting of the board, provided that the approval has not been withdrawn by a later resolution of the board. A list of any such items, tests, or procedures that have been approved by the board is available from the board office or from the board Web site.

*"Board"* means the electrical examining board created under 2007 Iowa Acts, chapter 197, section 12.

*"Department"* means the department of public safety.

*"Division"* means the fire marshal division of the department of public safety.

*"Documented experience"* means experience which an applicant for licensing has completed and which has been documented by the applicant's completion and submission of a sworn affidavit or other evidence required by the board.

*"Executive secretary"* means the executive secretary appointed by the board.

*"Final agency action"* means the issuance, denial, suspension, or revocation of a license. If an action is subject to appeal, "final agency action" has occurred when the administrative appeal process provided for in 661—Chapter 503 has been exhausted or when the deadline for filing an appeal has expired.

*"Residential electrical work"* means electrical work in a residence in which there are no more than four living units within the same building.

*"Routine maintenance"* means the repair or replacement of existing electrical apparatus or equipment of the same size and type for which no changes in wiring are made. The performance of routine maintenance in itself does not require a person to obtain or hold a license as an electrician or electrical contractor.

These rules are intended to implement 2007 Iowa Acts, chapter 197.

[Filed emergency 12/17/07—published 1/16/08, effective 1/1/08]

# CHAPTER 501
# ELECTRICIAN AND ELECTRICAL CONTRACTOR LICENSING PROGRAM—ADMINISTRATIVE PROCEDURES

**661—501.1(82GA,ch197) Board meetings and agenda.**

**501.1(1)** Board meetings may be called in any of the following ways:

*a.* Set by the board at a previous board meeting.

*b.* Called by the chairperson or, in the absence of the chairperson, by the vice chairperson.

*c.* Called by the executive secretary.

*d.* Called by any four members of the board.

**501.1(2)** The executive secretary shall ensure that any applicable provision of Iowa law regarding notice of meetings is met for any meeting of the board.

**661—501.2** to **501.4** Reserved.

**661—501.5(17A) Waivers.** This rule applies to waivers of any administrative rule adopted by the electrical examining board. Rule 661—10.222(17A) is hereby adopted by reference, with the following amendments:

**501.5(1)** Strike the word "department" wherever it occurs as a reference to the department of public safety and replace it with the word "board."

**501.5(2)** Strike any reference to the address of the department of public safety or any unit thereof and replace it with "State Public Safety Headquarters Building, 215 East 7th Street, Des Moines, Iowa 50319."

**501.5(3)** Petitions for waivers shall be submitted to the board as provided in 661—subrule 500.1(3).

These rules are intended to implement 2007 Iowa Acts, chapter 197.

[Filed emergency 12/17/07—published 1/16/08, effective 1/1/08]

# CHAPTER 502
# ELECTRICIAN AND ELECTRICAL CONTRACTOR LICENSING PROGRAM—LICENSING REQUIREMENTS, PROCEDURES, AND FEES

**661—502.1(82GA,ch197) License categories and licenses required.**

**502.1(1)** The following categories of license are established:

*a.* Electrical contractor.
*b.* Master electrician, class A.
*c.* Master electrician, class B.
*d.* Journeyman electrician, class A.
*e.* Journeyman electrician, class B.
*f.* Apprentice electrician.
*g.* Special electrician.
*h.* Unclassified person.

**502.1(2)** A person who holds any class of license issued by the board, other than a class B license, may perform the work authorized by that license anywhere within the state of Iowa. A person who holds a special electrician license may perform the work which is authorized by that license endorsement. A person who holds a class B license may perform the work authorized by that license except in a political subdivision which, by local ordinance, has restricted or barred such work by a person who holds a class B license.

**502.1(3)** A person who does not have a current valid license shall not perform work as an electrician or as an unclassified person. A person shall not perform work which requires licensing and which is not specifically authorized under the license issued.

EXCEPTION 1: A person who holds a current valid license issued by a political subdivision may perform work as an electrician or unclassified person within the corporate limits of the political subdivision which issued the license.

EXCEPTION 2: A person who has submitted a completed application and the applicable fee to the board may perform work authorized by the license applied for, provided (a) that the person is not clearly unqualified for the license applied for, (b) that the person has, prior to January 1, 2008, been performing work equivalent to work authorized under the license being applied for, and (c) that, prior to the actual issuance of licenses by the board, a person may not perform work in a political subdivision which issues electrician licenses unless the person holds a current and valid license issued by that political subdivision.

NOTE: Exception 2 is temporary and will be rescinded when licenses are issued by the board. The rescission may occur as early as April 1, 2008, and is expected to occur no later than July 1, 2008.

EXCEPTION 3: A person may work for up to 100 continuous days as an unclassified person prior to obtaining a license. Any documented time during which a person has worked as an unclassified person prior to January 1, 2008, or any time during which a person has worked as a licensed unclassified person shall be credited to any applicable experience requirement. Any time during which a person works as an unclassified person without a license on or after January 1, 2008, shall not be counted toward any such experience requirement, except that a person may receive credit for time worked as an unclassified person on or after January 1, 2008, without a license if the person has applied for a license.

**661—502.2(82GA,ch197) License requirements.**

**502.2(1)** An electrical contractor license may be issued to a person who submits to the board the required application with the applicable fee, who holds a master electrician license, who is registered as a contractor with the labor services division of the Iowa department of workforce development, and who is not disqualified pursuant to rule 661—502.4(82GA,ch197). An electrical contractor license issued to a person who holds a class B master electrician license is subject to the same restriction of use as is the class B master electrician license.

**502.2(2)** A class A master electrician license may be issued to a person who submits to the board a completed application with the applicable fee, who is not disqualified from holding a license pursuant to rule 661—502.4(82GA,ch197), and who meets one of the following requirements:

*a.* Has completed one year of experience as a licensed journeyman electrician, and has passed a supervised written examination for master electrician approved by the board with a score of 75 or higher; or

*b.* As of December 31, 2007, held a current valid license as a master electrician issued by a political subdivision in Iowa, the issuance of which required passing a supervised written examination approved by the board, and one year of experience as a journeyman electrician; or

*c.* Holds a current class B master electrician license and has passed a supervised written examination for master electrician approved by the board with a score of 75 or higher.

**502.2(3)** A class B master electrician license may be issued to a person who submits to the board a completed application with the applicable fee, who is not disqualified from holding a license pursuant to rule 661—502.4(82GA,ch197), who presents credible evidence of having worked for a total of eight years (16,000 hours of cumulative experience) as a master electrician since 1989, and whose experience as a master electrician began on or before December 31, 1989.

**502.2(4)** A class A journeyman electrician license may be issued to a person who submits to the board a completed application with the applicable fee, who is not disqualified from holding a license pursuant to rule 661—502.4(82GA,ch197), and who meets one of the following requirements:

*a.* Has successfully completed an apprenticeship program registered by the Bureau of Apprenticeship and Training of the United States Department of Labor, has passed a supervised written examination for journeyman electrician approved by the board with a score of 75 or higher, and has completed four years of experience as an apprentice electrician; or

*b.* As of December 31, 2007, held a current valid license as a journeyman electrician issued by a political subdivision in Iowa, the issuance of which required passing a supervised written examination approved by the board, and has completed a registered apprenticeship program and four years of experience as an apprentice electrician; or

*c.* Holds a current class B journeyman electrician license and has passed a supervised written examination for journeyman electrician approved by the board with a score of 75 or higher.

**502.2(5)** A class B journeyman electrician license may be issued to a person who submits to the board a completed application with the applicable fee, who is not disqualified from holding a license pursuant to rule 661—502.4(82GA,ch197), who presents credible evidence of having worked for a total of eight years (16,000 hours of cumulative experience) as a journeyman or master electrician since 1989, and whose experience as a journeyman or master electrician began on or before December 31, 1990.

**502.2(6)** A special electrician license may be issued to a person who submits to the board a completed application with the applicable fee, who is not disqualified from holding a license pursuant to rule 661—502.4(82GA,ch197), and who meets the qualifications for any endorsement entered on the license. Each special electrician license shall carry one or more endorsements as specified in paragraphs *"a"* through *"d."*

*a.* Endorsement 1, "Irrigation System Wiring," shall be included on a special electrician license if the licensee requests it and has passed a supervised examination approved by the board or has completed two years, or 4,000 hours, of documented experience in the wiring of irrigation systems.

*b.* Endorsement 2, "Disconnecting and Reconnecting Existing Air Conditioning and Refrigeration Systems," shall be included on a special electrician license if the licensee requests it and has passed a supervised examination approved by the board or has completed two years of documented experience in the disconnecting and reconnecting of existing air conditioning and refrigeration systems.

*c.* Endorsement 3, "Sign Installation," shall be included on a special electrician license if the licensee requests that it be included. This endorsement does not authorize a licensee to connect power to a sign that has a voltage greater than 220V and an ampere rating greater than 20 amps. Initial installation or upgrading of the branch circuits supplying power to the sign shall be completed by a licensed master electrician or by a licensed journeyman electrician under the supervision of a master electrician.

*d.* Endorsement 4, "Residential Electrician," shall be included on a special electrician license if the licensee requests it and has passed a supervised written examination approved by the board or has completed four years of documented experience performing residential electrical work. A political subdivision may, by enactment of an ordinance filed with the board prior to its effective date, require

that a special electrician performing work authorized by this endorsement be supervised by a master electrician.

**502.2(7)** An apprentice electrician license may be issued to a person who submits a completed application to the board with the applicable fee, who is not disqualified pursuant to rule 661—502.4(82GA,ch197) and who is participating in an apprenticeship training program that is registered with the Bureau of Apprenticeship and Training of the United States Department of Labor. A person may hold an apprentice electrician license for no more than six years from the original date on which an apprentice electrician license is granted, except that a person may apply to the board for an exception to this limitation based upon a documented hardship. "Documented hardship" includes, but is not limited to, an interruption in service as an apprentice electrician for active military duty or for an extended illness.

**502.2(8)** A license as an unclassified person may be issued to a person who submits a completed application to the board with the applicable fee, who is not disqualified pursuant to rule 661—502.4(82GA,ch197) and who is employed by a licensed electrical contractor.

**661—502.3(82GA,ch197) License terms and fees.** The following table sets out the length of term of each license and the fee for the license.

| License Type | Term | Fee |
|---|---|---|
| Electrical Contractor | 3 years | $375 |
| Master Electrician, Class A | 3 years | $375 |
| Master Electrician, Class B | 3 years | $375 |
| Journeyman Electrician, Class A | 3 years | $75 |
| Journeyman Electrician, Class B | 3 years | $75 |
| Special Electrician | 3 years | $75 |
| Apprentice Electrician | 1 year | $25 |
| Unclassified Person | 1 year | $20 |

**502.3(1)** Fees are payable in advance with the application, by check or warrant to the Department of Public Safety. The memo area of the check should read "Electrician Licensing Fees."

**502.3(2)** Notice of renewal shall be provided to each licensee no less than 30 days prior to the expiration of the current license.

**661—502.4(82GA,ch197) Disqualifications for licensure.** An application for a license shall be denied if any of the following apply:

**502.4(1)** The applicant fails to meet the requirements for the license for which the applicant has applied or the applicant fails to provide adequate documentation of any requirement.

**502.4(2)** The applicant has previously had a license revoked or suspended by the board, and the circumstances which formed the basis of the revocation or suspension have not been corrected. If a license was revoked or suspended and conditions were imposed for the restoration of the license, licensure shall be denied unless those conditions have been met.

**502.4(3)** The applicant has been denied, for cause, a license to work, or a license as an electrician has been revoked, for cause, in any other state or political subdivision and the applicant has not subsequently received a license from the state or political subdivision which denied or revoked the license. An applicant who has been denied a license pursuant to this provision may apply to the board for a license and, upon a showing of evidence satisfactory to the board that the condition or conditions which led to the denial or revocation no longer apply, the board may grant the license to the applicant.

**502.4(4)** The applicant falsifies or fails to provide any information requested in connection with the application or falsifies any other information provided to the board in support of the application.

**502.4(5)** The applicant may be denied a license if the applicant has previously been convicted of a criminal offense involving, but not limited to, fraud, misrepresentation, arson or theft, or if the applicant

is currently delinquent in paying employment taxes to the state of Iowa or the United States. If the denial is based upon conviction of a criminal offense, the board shall examine the specific circumstances of the offense and may grant the license if, in the judgment of the board, sufficient time has passed since the conviction and there is no further evidence of criminal conduct on the part of the applicant.

**661—502.5(82GA,ch197) License application.** Any person seeking a license from the board shall submit a completed application to the board accompanied by the applicable fee payable by check, money order, or warrant to the Iowa Department of Public Safety. The memo area of the check should read "Electrician Licensing Fees." The application shall be submitted on the form prescribed by the board, which may be obtained from the board office.

**661—502.6(82GA,ch197) Restriction of use of class B licenses by political subdivisions.** A political subdivision may disallow or restrict the use of a class B license to perform electrical work within the geographic limits of that subdivision through adoption of a local ordinance. A copy of any such ordinance shall be filed with the board office prior to the effective date of the ordinance.

EXCEPTION 1: An ordinance restricting or disallowing electrical work by holders of class B licenses shall not apply to work which is not subject to the issuance of permits by the political subdivision.

EXCEPTION 2: An ordinance restricting or disallowing electrical work by holders of class B licenses which was passed prior to January 1, 2008, shall be filed with the board as soon as practicable and, in any case, no later than April 1, 2008.

**661—502.7(82GA,ch197) Financial responsibility.** Any holder of an electrical contractor license or any holder of an electrician license who is not employed by a licensed electrical contractor and who contracts to provide electrical work which requires a license issued pursuant to 661—Chapters 500 through 503 shall, at all times, maintain insurance coverage as provided in this rule.

**502.7(1)** The licensee shall maintain general and complete operations liability insurance in the amount of at least $1 million for all work performed which requires licensing pursuant to 661—Chapters 500 through 503.

*a.* The carrier of any insurance coverage maintained by the licensee to meet this requirement shall notify the board 30 days prior to the effective date of cancellation or reduction of the coverage.

*b.* The licensee shall cease operation immediately if the insurance coverage required by this rule is no longer in force and other insurance coverage meeting the requirements of this rule is not in force. A licensee shall not initiate any electrical work which cannot reasonably be expected to be completed prior to the effective date of the cancellation of the insurance coverage required by this rule and of which the licensee has received notice, unless new insurance coverage meeting the requirements of this rule has been obtained and will be in force upon cancellation of the prior coverage.

**502.7(2)** Reserved.

These rules are intended to implement 2007 Iowa Acts, chapter 197.

[Filed emergency 12/17/07—published 1/16/08, effective 1/1/08]

# CHAPTER 503
# ELECTRICIAN AND ELECTRICAL CONTRACTOR LICENSING PROGRAM— COMPLAINTS AND DISCIPLINE

**661—503.1(82GA,ch197) Complaints.** Any person may file a complaint regarding work performed by any licensee or licensee applicant, or by an unlicensed person who should possess a license issued by the board. Complaints shall be filed either in writing or electronically.

**661—503.2(82GA,ch197) Discipline.** If a complaint alleging an act or acts in violation of rules adopted by the board, 2007 Iowa Acts, chapter 197, or any other provision of law deemed relevant by the board to the use of a license issued by the board is substantiated, the board may suspend the license for a specific period of time, or indefinitely, may revoke the license, or may reprimand the licensee. The holder of a license which is suspended or revoked shall receive notice of the suspension or revocation in writing by registered mail, return receipt requested, or by personal service. The notice shall include a statement that the licensee has the right to appeal the reprimand, suspension or revocation to the board within 14 days of receiving the notice, and that the reprimand, revocation or suspension shall not take effect until the time to file an appeal has expired. If an appeal is filed, the reprimand, suspension or revocation shall be stayed until the appeal has been acted upon.

EXCEPTION: If the board finds that a violation which is the basis of the suspension or revocation is such that allowing the licensee to continue to engage in work covered by the license would present an imminent threat to the safety of the public, the board may provide that the suspension or revocation take effect immediately upon notice being delivered to the licensee.

**661—503.3(82GA,ch197) Action against an unlicensed person.** If a person who is not licensed by the board has engaged in or is engaging in work requiring licensure by the board, the board may assess a civil penalty against the person, may seek an injunction to prevent the person from continuing to engage in such work, or both. A person who is accused of engaging in work which requires licensure by the board without having such a license shall be notified of the specific allegations by registered mail, return receipt requested, or by personal service. The matter shall be referred to an administrative law judge employed by the department of inspections and appeals, who shall schedule a hearing on the matter within 30 days of notice having been provided to the person against whom the allegations have been made. The hearing may be rescheduled to a later date by mutual consent of the parties.

**661—503.4(82GA,ch197) Appeals.** A licensee whose license is disciplined, an applicant whose application for a license is denied, or a person who is not licensed by the board and who is assessed a civil penalty for engaging in an activity requiring a license may appeal the suspension, revocation, denial, or civil penalty to the board by notifying the board office of the appeal in writing within 30 calendar days after receiving notice of the suspension, revocation, denial, or civil penalty.

**661—503.5(252J,82GA,ch197) Suspension or revocation for nonpayment of child support.** The following procedures shall apply to actions taken by the board on a certificate of noncompliance received from the Iowa department of human services pursuant to Iowa Code chapter 252J.

**503.5(1)** The notice required by Iowa Code section 252J.8 shall be served upon the licensee by restricted certified mail, return receipt requested, or personal service in accordance with Iowa Rule of Civil Procedure 1.305. Alternatively, the licensee may accept service personally or through authorized counsel.

**503.5(2)** The effective date of revocation or suspension of a license, as specified in the notice required by Iowa Code section 252J.8, shall be 60 days following service upon the licensee.

**503.5(3)** Licensees shall keep the board informed of all court actions and all child support recovery unit actions taken under or in connection with Iowa Code chapter 252J and shall provide the board with copies, within 7 days of filing or issuance, of all applications filed with the district court pursuant to Iowa Code section 252J.9, all court orders entered in such actions, and withdrawals of certificates of noncompliance by the child support recovery unit.

**503.5(4)** All applicable fees for an application or reinstatement must be paid by the licensee before a license will be issued, renewed, or reinstated after the board has denied the issuance or renewal of a license or has suspended or revoked a license pursuant to Iowa Code chapter 252J.

**503.5(5)** In the event the licensee files a timely district court action following service of a notice pursuant to Iowa Code sections 252J.8 and 252J.9, the board shall continue with the intended action described in the notice upon the receipt of a court order lifting the stay, dismissing the action, or otherwise directing the board to proceed. For the purpose of determining the effective date of revocation or suspension of the license, the board shall count the number of days before the action was filed and the number of days after the action was disposed of by the court.

**503.5(6)** Suspensions or revocations imposed pursuant to this rule may not be appealed administratively to the board or within the department of public safety.

NOTE: The procedures established in rule 661—503.5(252J,82GA,ch197) implement the requirements of Iowa Code chapter 252J. The provisions of Iowa Code chapter 252J establish mandatory requirements for an agency which administers a licensing program, such as the one established in this chapter, and provide that actions brought under these provisions are not subject to contested case procedures established in Iowa Code chapter 17A, but must be appealed directly to district court.

These rules are intended to implement 2007 Iowa Acts, chapter 197, and Iowa Code chapter 252J.

[Filed emergency 12/17/07—published 1/16/08, effective 1/1/08]

# CHAPTER 504
# STANDARDS FOR ELECTRICAL WORK

**661—504.1(82GA,ch197) Installation requirements.** The provisions of the National Electrical Code, 2005 edition, published by the National Fire Protection Association, Batterymarch Park, Quincy, Massachusetts, are adopted as the requirements for electrical installations performed by persons licensed pursuant to 661—Chapters 500 through 503.

This rule is intended to implement 2007 Iowa Acts, chapter 197.

[Filed emergency 12/17/07—published 1/16/08, effective 1/1/08]